PASTERNACK
an INFINITE brand

SMA Male Right Angle Connector Solder Attachment for PE-SR405AL, PE-SR405FL, RG405

RF Connectors
Technical Data Sheet

PE4025

Configuration

- SMA Male Connector
- MIL-STD-348A
- 50 Ohms
- Right Angle Body Geometry
- Connector Interface Types: PE-SR405AL, PE-SR405FL, RG405
- 5/16 inch Hex

Features

- Max. Operating Frequency 10 GHz
- Excellent VSWR of 1.23:1
- Gold Plated Brass Contact
- 50 µin minimum contact plating

Applications

- General Purpose Test
- Custom Cable Assemblies

Description

Pasternack's PE4025 Right Angle, SMA, Standard, Connector is part of our full line of RF components available for same-day shipping. Our SMA male connector operates up to a maximum frequency of 10 GHz and offers excellent VSWR of 1.23:1. Its right angle body geometry allows for easier connections in tight spaces.

Our SMA male right angle connector PE4025 datasheet specifications and drawing with dimensions are shown below in this PDF. Pasternack's broad catalog of RF, microwave and millimeter wave connectors allows designers to configure and customize their signal connections however they like. Whether the need is to provide an I/O for a board design, or simply create a custom cable assembly configuration, Pasternack has the right connector for the job. Pasternack can also expertly build your custom cable assemblies for you and ship same-day.

Electrical Specifications

Description	Minimum	Typical	Maximum	Units
Frequency Range	DC		10	GHz
VSWR			1.23:1	
Operating Voltage (AC)			335	Vrms
Impedance		50		Ohms

Mechanical Specifications

Size

Length	0.65 in [16.51 mm]
Width	0.32 in [8.00 mm]
Height	0.44 in [11.20 mm]
Weight	0.02 lbs [6.80 g]
Mating Torque	3 to 5 in-lbs [0.34 to 0.57 Nm]

Click the following link (or enter part number in "SEARCH" on website) to obtain additional part information including price, inventory and certifications: SMA Male Right Angle Connector Solder Attachment for PE-SR405AL, PE-SR405FL, RG405 PE4025

Pasternack Enterprises, Inc. • P.O. Box 16759, Irvine, CA 92623
Phone: (866) 727-8376 or (949) 261-1920 • **Fax:** (949) 261-7451
Sales@Pasternack.com • Techsupport@Pasternack.com

© 2020 Pasternack Enterprises All Rights Reserved

SMA Male Right Angle Connector Solder Attachment for PE-SR405AL, PE-SR405FL, RG405

Material Specifications

Description	Material	Plating
Contact	Brass	Gold 50 µin minimum
Insulation	PTFE	
Body	Stainless Steel	Gold 30 µin minimum
Coupling Nut	Brass	Nickel 100 µin minimum

Environmental Specifications

Temperature

Operating Range -65 to +165 deg C

Compliance Certifications (see product page for current document)

Plotted and Other Data

Notes:

SMA Male Right Angle Connector Solder Attachment for PE-SR405AL, PE-SR405FL, RG405 from Pasternack Enterprises has same day shipment for domestic and International orders. Our RF, microwave and millimeter wave products maintain a 99.4% availability and are part of the broadest selection in the industry.

Click the following link (or enter part number in “SEARCH” on website) to obtain additional part information including price, inventory and certifications: SMA Male Right Angle Connector Solder Attachment for PE-SR405AL, PE-SR405FL, RG405 PE4025

URL: https://www.pasternack.com/sma-male-standard-pe-sr405al-pe-sr405fl-rg405-connector-pe4025-p.aspx

The information contained in this document is accurate to the best of our knowledge and representative of the part described herein. It may be necessary to make modifications to the part and/or the documentation of the part, in order to implement improvements. Pasternack reserves the right to make such changes as required. Unless otherwise stated, all specifications are nominal. Pasternack does not make any representation or warranty regarding the suitability of the part described herein for any particular purpose, and Pasternack does not assume any liability arising out of the use of any part or documentation.

Pasternack Enterprises, Inc. • P.O. Box 16759, Irvine, CA 92623
Phone: (866) 727-8376 or (949) 261-1920 • **Fax:** (949) 261-7451
Sales@Pasternack.com • Techsupport@Pasternack.com

© 2020 Pasternack Enterprises All Rights Reserved

PE4025 CAD Drawing

SMA Male Right Angle Connector Solder Attachment
for PE-SR405AL, PE-SR405FL, RG405

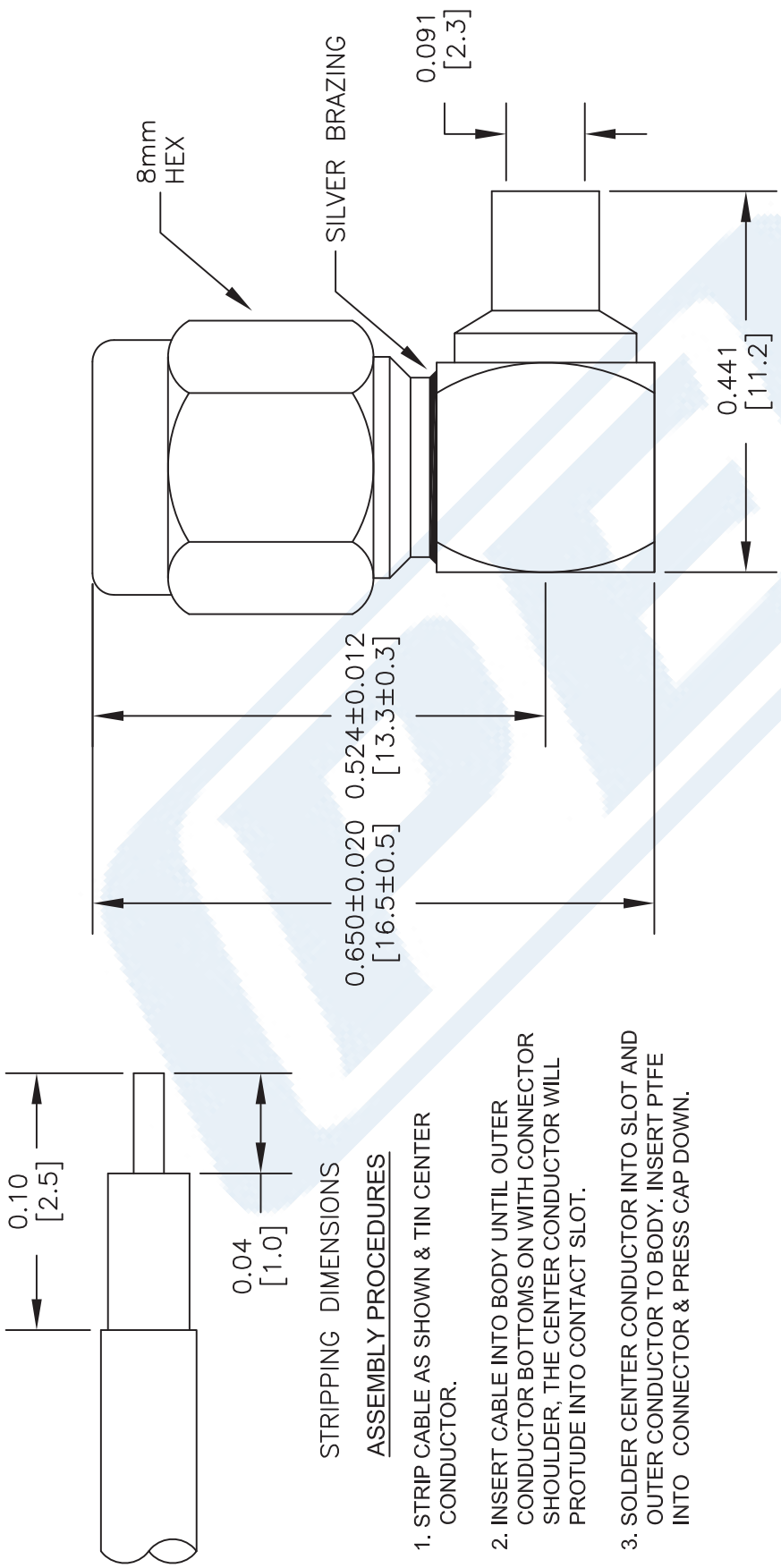

STRIPPING DIMENSIONS

ASSEMBLY PROCEDURES

1. STRIP CABLE AS SHOWN & TIN CENTER CONDUCTOR.
2. INSERT CABLE INTO BODY UNTIL OUTER CONDUCTOR BOTTOMS ON WITH CONNECTOR SHOULDER, THE CENTER CONDUCTOR WILL PROTUDE INTO CONTACT SLOT.
3. SOLDER CENTER CONDUCTOR INTO SLOT AND OUTER CONDUCTOR TO BODY. INSERT PTFE INTO CONNECTOR & PRESS CAP DOWN.

STANDARD TOLERANCES

.X	±0.2
.XX	±0.1
.XXX	±0.05

*STANDARD TOLERANCES APPLY ONLY TO DIMENSIONS IN INCHES

NOTES:
1. UNLESS OTHERWISE SPECIFIED ALL DIMENSIONS ARE NOMINAL.
2. ALL SPECIFICATIONS ARE SUBJECT TO CHANGE WITHOUT NOTICE AT ANY TIME.
3. DIMENSIONS ARE IN INCHES [mm].
4. FITS MIL-C-17 AND EQUIVALENT CABLES.

DWG TITLE
PE4025

CAD FILE 060716 | SCALE N/A | SIZE A | 2233

FSCM NO. 53919

PASTERNACK®
THE ENGINEER'S RF SOURCE
Pasternack Enterprises, Inc.
P.O. Box 16759 | Irvine | CA | 92623
Phone: (949) 261-1920 | **Fax:** (949) 261-7451
Website: www.pasternack.com | **E-Mail:** sales@pasternack.com

© 2020 Pasternack Enterprises All Rights Reserved

PASTERNACK
an INFINITE brand

SMP Female Right Angle Connector Solder Attachment for RG405, PE-SR405FL, PE-SR405FLJ, Round Body

RF Connectors
Technical Data Sheet

PE44915

Configuration

- SMP Female Connector
- DESC 94008
- 50 Ohms
- Right Angle Body Geometry
- Connector Interface Types: RG405, PE-SR405FL, PE-SR405FLJ

Features

- Max. Operating Frequency 30 GHz
- Excellent VSWR of 1.25:1
- Gold Plated Beryllium Copper Contact
- Contact plating according to MIL-G-45204
- Blind Mate Connector

Applications

- General Purpose Test
- Custom Cable Assemblies

Description

Pasternack's PE44915 SMP female right angle connector with solder attachment for RG405, PE-SR405FL and PE-SR405FLJ is part of our full line of RF components available for same-day shipping. Our SMP female connector operates up to a maximum frequency of 30 GHz and offers excellent VSWR of 1.25:1. The Pasternack blind mate connector is ideal for applications where direct visual or tactile access to the connection point is not possible, for example, when two circuit boards need to be mated. Its right angle body geometry allows for easier connections in tight spaces.

Our SMP female right angle connector PE44915 datasheet specifications and drawing with dimensions are shown below in this PDF. Pasternack's broad catalog of RF, microwave and millimeter wave connectors allows designers to configure and customize their signal connections however they like. Whether the need is to provide an I/O for a board design, or simply create a custom cable assembly configuration, Pasternack has the right connector for the job. Pasternack can also expertly build your custom cable assemblies for you and ship same-day.

Electrical Specifications

Description	Minimum	Typical	Maximum	Units
Frequency Range	DC		30	GHz
VSWR			1.25:1	

Performance by Frequency

Description	F1	F2	F3	F4	F5	Units
Frequency Range	DC to 18	18 to 30				GHz
VSWR, Max	1.15:1	1.25:1				

Click the following link (or enter part number in "SEARCH" on website) to obtain additional part information including price, inventory and certifications: SMP Female Right Angle Connector Solder Attachment for RG405, PE-SR405FL, PE-SR-405FLJ, Round Body PE44915

Pasternack Enterprises, Inc. • P.O. Box 16759, Irvine, CA 92623
Phone: (866) 727-8376 or (949) 261-1920 • **Fax:** (949) 261-7451
Sales@Pasternack.com • Techsupport@Pasternack.com

© 2019 Pasternack Enterprises All Rights Reserved

SMP Female Right Angle Connector Solder Attachment for RG405, PE-SR405FL, PE-SR405FLJ, Round Body

Mechanical Specifications

Size

Length	0.265 in [6.73 mm]
Width/Dia.	0.188 in [4.78 mm]
Weight	0.002 lbs [0.91 g]

Material Specifications

Description	Material	Plating
Contact	Beryllium Copper	Gold MIL-G-45204
Insulation	PTFE	
Body	Beryllium Copper	Gold MIL-G-45204

Environmental Specifications

Compliance Certifications (see product page for current document)

Plotted and Other Data

Notes:

SMP Female Right Angle Connector Solder Attachment for RG405, PE-SR405FL, PE-SR405FLJ, Round Body from Pasternack Enterprises has same day shipment for domestic and International orders. Our RF, microwave and millimeter wave products maintain a 99.4% availability and are part of the broadest selection in the industry.

Click the following link (or enter part number in “SEARCH” on website) to obtain additional part information including price, inventory and certifications: SMP Female Right Angle Connector Solder Attachment for RG405, PE-SR405FL, PE-SR405FLJ, Round Body PE44915

URL: https://www.pasternack.com/smp-female-standard-rg405-pe-sr405fl-pe-sr405flj-connector-pe44915-p.aspx

The information contained in this document is accurate to the best of our knowledge and representative of the part described herein. It may be necessary to make modifications to the part and/or the documentation of the part, in order to implement improvements. Pasternack reserves the right to make such changes as required. Unless otherwise stated, all specifications are nominal. Pasternack does not make any representation or warranty regarding the suitability of the part described herein for any particular purpose, and Pasternack does not assume any liability arising out of the use of any part or documentation.

Pasternack Enterprises, Inc. • P.O. Box 16759, Irvine, CA 92623
Phone: (866) 727-8376 or (949) 261-1920 • **Fax:** (949) 261-7451
Sales@Pasternack.com • Techsupport@Pasternack.com

© 2019 Pasternack Enterprises All Rights Reserved

PE44915 CAD Drawing

SMP Female Right Angle Connector Solder Attachment for
RG405, PE-SR405FL, PE-SR405FLJ, Round Body

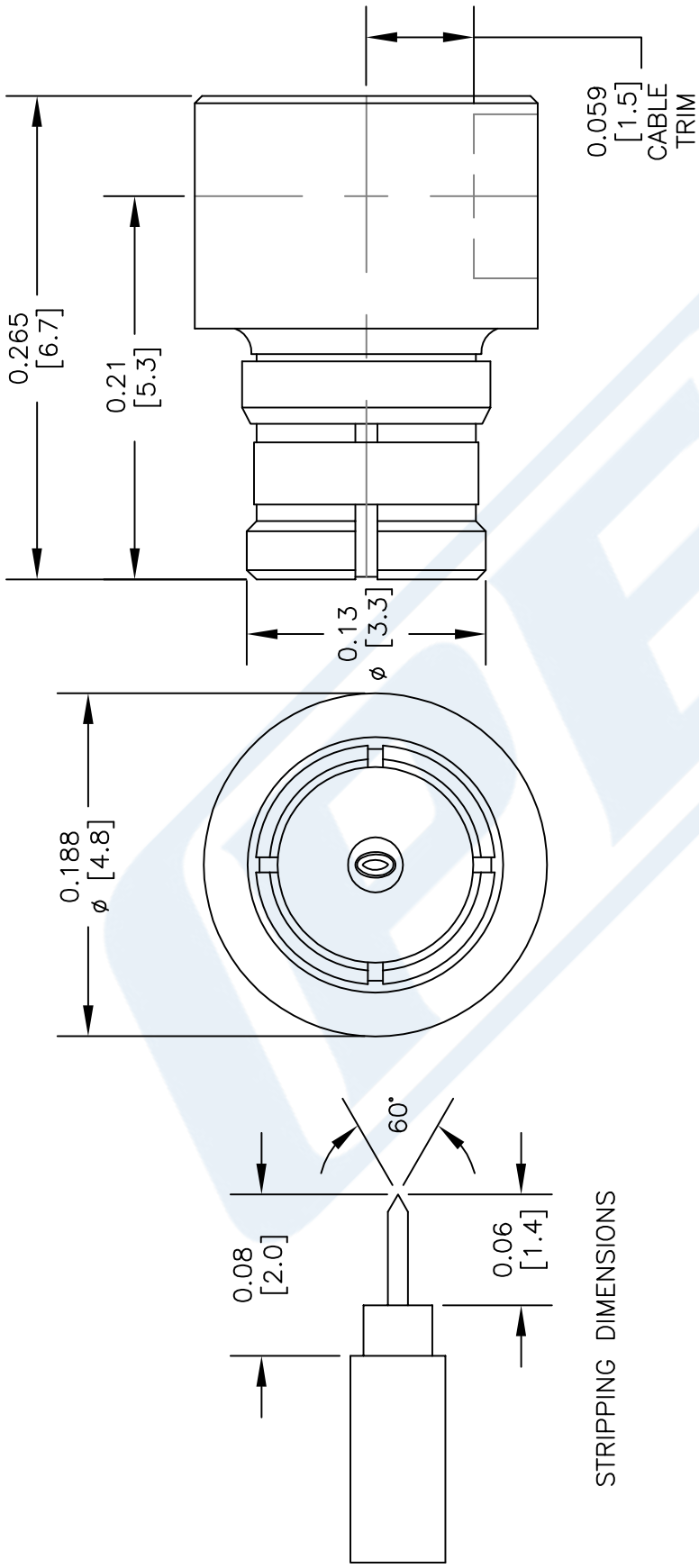

NOTES:
1. UNLESS OTHERWISE SPECIFIED ALL DIMENSIONS ARE NOMINAL.
2. ALL SPECIFICATIONS ARE SUBJECT TO CHANGE WITHOUT NOTICE AT ANY TIME.
3. DIMENSIONS ARE IN INCHES [mm].
4. FITS MIL-C-17 AND EQUIVALENT CABLES.

CAD FILE	102913	SCALE N/A	SIZE A	150

DWG TITLE **PE44915**

FSCM NO. 53919

PASTERNACK®
Pasternack Enterprises, Inc.
P.O. Box 16759 | Irvine | CA | 92623
Phone: (949) 261-1920 | **Fax:** (949) 261-7451
Website: www.pasternack.com | **E-Mail:** sales@pasternack.com

© 2019 Pasternack Enterprises All Rights Reserved

PASTERNACK®
THE ENGINEER'S RF SOURCE

Formable 086 Semirigid Coax Cable with Tinned Braid Outer Conductor and Black FEP Jacket

RF Cables Technical Data Sheet PE-SR405FLJ

Configuration

- Formable Cable
- 1 Shield(s)

Features

- Dimensionally the same as standard solid outer conductor semi-rigid coax
- Standard semi-rigid connectors can be used
- Cable is hand formable and does not require special tools to bend
- Connectors are easily soldered to Tin soaked outer conductor
- Cable can be formed more than once without damage to outer conductor
- High RF Shielding >100 dB

Description

Formable semi-rigid coax is a hand formable version of standard semi-rigid that does not require complicated and costly pre-formed cable assemblies. Because the dimensions and electrical characteristics are so closely matched to semi-rigid coax, standard semi-rigid connectors can be used. The tin soaked copper braid outer shield provides excellent RF shielding. FEP Jacket reduces the chance of shorting exposed contacts or circuit conductors.

Electrical Specifications

Description	Minimum	Typical	Maximum	Units
Frequency Range	DC		61	GHz
Impedance		50		Ohms
Velocity of Propagation		69.5		%
Time Delay		1.43 [4.69]		ns/ft [ns/m]
Shielding Effectiveness	100			dB
Operating Voltage (AC)			1,500	Vrms
Inner Conductor DC Resistance			65.7	Ohms/1000ft
Outer Conductor DC Resistance			10.2	Ohms/1000ft
Nominal Capacitance		29 [95.14]		pF/ft [pF/m]

Performance by Frequency Band

Description	F1	F2	F3	F4	F5	Units
Frequency	0.5	1	5	10	20	GHz
Attenuation, Typ	15	22.5	54.9	81.2	120	dB/100ft
	49.21	73.82	180.12	266.4	393.7	dB/100m
Input Power (CW), Max	173.5	121.5	52.2	35.8	24.3	Watts

Click the following link (or enter part number in "SEARCH" on website) to obtain additional part information including price, inventory and certifications: Formable PE-SR405FLJ Coax Cable with Outer Conductor and Black FEP Jacket PE-SR-405FLJ

Pasternack Enterprises, Inc. • P.O. Box 16759, Irvine, CA 92623
Phone: (866) 727-8376 or (949) 261-1920 • **Fax:** (949) 261-7451
Sales@Pasternack.com • Techsupport@Pasternack.com

© 2017 Pasternack Enterprises All Rights Reserved

Formable 086 Semirigid Coax Cable with Tinned Braid Outer Conductor and Black FEP Jacket

Mechanical Specifications

Diameter	0.105 in [2.67 mm]
Weight	0.015 lbs/ft [0.02 Kg/m]
Min. Bend Radius (Installation)	0.5 in [12.7 mm]
Min. Bend Radius (Repeated)	0.787 in [19.99 mm]

Construction Specifications

Description	Material and Plating	Diameter
Inner Conductor	Copper Clad Steel, Silver, 1 Strands	0.02 in [0.51 mm]
Conductor Type	Solid	
Dielectric	PTFE	0.062 in [1.57 mm]
Outer Conductor	Tinned Copper Composite Braid	0.085 in [2.16 mm]
Jacket	FEP, Black	0.105 in [2.67 mm]

Environmental Specifications

Temperature

Operating Range	-55 to +125 deg C

Compliance Certifications (see product page for current document)

Plotted and Other Data

Notes:

Formable 086 Semirigid Coax Cable with Tinned Braid Outer Conductor and Black FEP Jacket from Pasternack Enterprises has same day shipment for domestic and International orders. Our RF, microwave and millimeter wave products maintain a 99.4% availability and are part of the broadest selection in the industry.

Click the following link (or enter part number in “SEARCH” on website) to obtain additional part information including price, inventory and certifications: Formable PE-SR405FLJ Coax Cable with Outer Conductor and Black FEP Jacket PE-SR405FLJ

URL: https://www.pasternack.com/50-ohm-formable-086-semirigid-tinned-braid-outer-conductor-fep-jacket-black-pe-sr405flj-p.aspx

The information contained in this document is accurate to the best of our knowledge and representative of the part described herein. It may be necessary to make modifications to the part and/or the documentation of the part, in order to implement improvements. Pasternack reserves the right to make such changes as required. Unless otherwise stated, all specifications are nominal. Pasternack does not make any representation or warranty regarding the suitability of the part described herein for any particular purpose, and Pasternack does not assume any liability arising out of the use of any part or documentation.

Pasternack Enterprises, Inc. • P.O. Box 16759, Irvine, CA 92623
Phone: (866) 727-8376 or (949) 261-1920 • **Fax:** (949) 261-7451
Sales@Pasternack.com • Techsupport@Pasternack.com

© 2017 Pasternack Enterprises All Rights Reserved

PE-SR405FLJ CAD Drawing

Formable 086 Semirigid Coax Cable with Tinned Braid
Outer Conductor and Black FEP Jacket

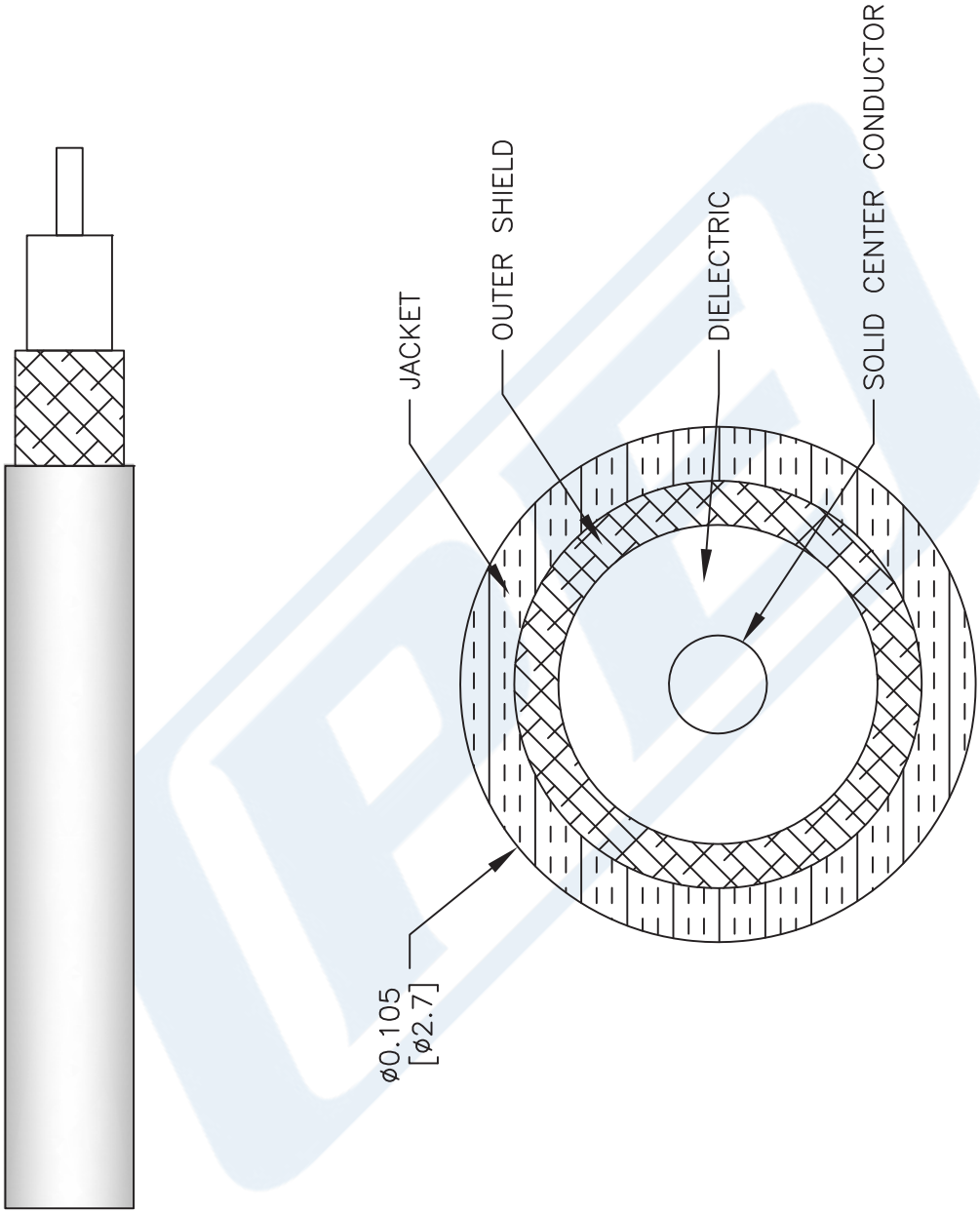

NOTES:
1. UNLESS OTHERWISE SPECIFIED ALL DIMENSIONS ARE NOMINAL.
2. ALL SPECIFICATIONS ARE SUBJECT TO CHANGE WITHOUT NOTICE AT ANY TIME.
3. DIMENSIONS ARE IN INCHES [mm].

DWG TITLE
PE-SR405FLJ

CAD FILE 062817 | SCALE N/A | SIZE A | 2233

CAGE CODE 53919

PASTERNACK®
THE ENGINEER'S RF SOURCE
Pasternack Enterprises, Inc.
P.O. Box 16759 | Irvine | CA | 92623
Phone: (949) 261-1920 | **Fax:** (949) 261-7451
Website: www.pasternack.com | **E-Mail:** sales@pasternack.com

© 2017 Pasternack Enterprises All Rights Reserved