Mini SMP Female Right Angle Connector Solder Attachment for PE-SR405AL, PE-SR405FL, PE-SR405FLJ, PE-SR405TN, RG405

RF Connectors Technical Data Sheet PE44494

Configuration

- Mini SMP Female Connector
- MIL-STD-348A
- 50 Ohms
- Right Angle Body Geometry
- PE-SR405AL, PE-SR405FL, PE-SR405FLJ, PE-SR405TN, RG405 Interface Type
- Solder Attachment

Features

- Max. Operating Frequency 65 GHz
- Gold Plated Beryllium Copper Contact
- Blind Mate Connector

Applications

- General Purpose Test
- Custom Cable Assemblies

Description

Pasternack's PE44494 Mini SMP female right angle connector with solder attachment for PE-SR405AL, PE-SR405FL, PE-SR405FLJ, PE-SR405TN and RG405 is part of our full line of RF components available for same-day shipping. Our Mini SMP female connector operates up to a maximum frequency of 65 GHz. The Pasternack blind mate connector is ideal for applications where direct visual or tactile access to the connection point is not possible, for example, when two circuit boards need to be mated. Its right angle body geometry allows for easier connections in tight spaces.

Our Mini SMP female right angle connector PE44494 datasheet specifications and drawing with dimensions are shown below in this PDF. Pasternack's broad catalog of RF, microwave and millimeter wave connectors allows designers to configure and customize their signal connections however they like. Whether the need is to provide an I/O for a board design, or simply create a custom cable assembly configuration, Pasternack has the right connector for the job. Pasternack can also expertly build your custom cable assemblies for you and ship same-day.

Electrical Specifications

Description	Minimum	Typical	Maximum	Units
Frequency Range	DC		65	GHz
Operating Voltage (AC)			325	Vrms
Inner Conductor DC Resistance			6	mOhms
Outer Conductor DC Resistance			2	mOhms
Insulation Resistance	5,000			MOhms

Performance by Frequency

Description	F1	F2	F3	F4	F5	Units
Frequency Range	DC to 6	6 to 12	12 to 18			GHz
VSWR, Max	1.11:1	1.23:1	1.33:1			

Click the following link (or enter part number in "SEARCH" on website) to obtain additional part information including price, inventory and certifications: Mini SMP Female Right Angle Connector Solder Attachment for PE-SR405AL, PE-SR405FL, PE-SR405FLJ, PE-SR405TN, RG405 PE44494

Pasternack Enterprises, Inc. • P.O. Box 16759, Irvine, CA 92623
Phone: (866) 727-8376 or (949) 261-1920 • **Fax:** (949) 261-7451
Sales@Pasternack.com • Techsupport@Pasternack.com

© 2016 Pasternack Enterprises All Rights Reserved

Mini SMP Female Right Angle Connector Solder Attachment for PE-SR405AL, PE-SR405FL, PE-SR405FLJ, PE-SR405TN, RG405

Electrical Specification Notes:
Insertion loss = 0.05 x sqrt(fGHz) dB max up to 18 GHz.

Mechanical Specifications

Size

Length	0.24 in [6.1 mm]
Width/Dia.	0.138 in [3.51 mm]
Height	0.24 in [6.1 mm]
Weight	0.00078 lbs [0.35 g]

Material Specifications

Description	Material	Plating
Contact	Beryllium Copper	Gold
Insulation	PTFE	
Outer Conductor	Beryllium Copper	Gold
Body	Brass	Gold

Mechanical Specification Notes:
Mating cycles: 500 (smooth bore), 100 (full detent) minimum.

Environmental Specifications

Temperature

Operating Range	-55 to +155 deg C
Humidity	MIL-STD-202, Method 106
Shock	MIL-STD-202, Method 213, Condition A
Vibration	MIL-STD-202, Method 204, Condition A
Thermal Shock	MIL-STD-202, Method 107, Condition B

Click the following link (or enter part number in "SEARCH" on website) to obtain additional part information including price, inventory and certifications: Mini SMP Female Right Angle Connector Solder Attachment for PE-SR405AL, PE-SR405FL, PE-SR405FLJ, PE-SR405TN, RG405 PE44494

Pasternack Enterprises, Inc. • P.O. Box 16759, Irvine, CA 92623
Phone: (866) 727-8376 or (949) 261-1920 • **Fax:** (949) 261-7451
Sales@Pasternack.com • Techsupport@Pasternack.com

© 2016 Pasternack Enterprises All Rights Reserved

Mini SMP Female Right Angle Connector Solder Attachment for PE-SR405AL, PE-SR405FL, PE-SR405FLJ, PE-SR405TN, RG405

Compliance Certifications (see product page for current document)

Plotted and Other Data

Notes:

Mini SMP Female Right Angle Connector Solder Attachment for PE-SR405AL, PE-SR405FL, PE-SR405FLJ, PE-SR405TN, RG405 from Pasternack Enterprises has same day shipment for domestic and International orders. Our RF, microwave and millimeter wave products maintain a 99% availability and are part of the broadest selection in the industry.

Click the following link (or enter part number in "SEARCH" on website) to obtain additional part information including price, inventory and certifications: Mini SMP Female Right Angle Connector Solder Attachment for PE-SR405AL, PE-SR405FL, PE-SR405FLJ, PE-SR405TN, RG405 PE44494

URL: https://www.pasternack.com/mini-smp-female-standard-pe-sr405al-pe-sr405fl-rg405-connector-pe44494-p.aspx

The information contained in this document is accurate to the best of our knowledge and representative of the part described herein. It may be necessary to make modifications to the part and/or the documentation of the part, in order to implement improvements. Pasternack reserves the right to make such changes as required. Unless otherwise stated, all specifications are nominal. Pasternack does not make any representation or warranty regarding the suitability of the part described herein for any particular purpose, and Pasternack does not assume any liability arising out of the use of any part or documentation.

Pasternack Enterprises, Inc. • P.O. Box 16759, Irvine, CA 92623
Phone: (866) 727-8376 or (949) 261-1920 • **Fax:** (949) 261-7451
Sales@Pasternack.com • Techsupport@Pasternack.com

© 2016 Pasternack Enterprises All Rights Reserved

PE44494 CAD Drawing

Mini SMP Female Right Angle Connector Solder Attachment for PE-SR405AL, PE-SR405FL, PE-SR405FLJ, PE-SR405TN, RG405

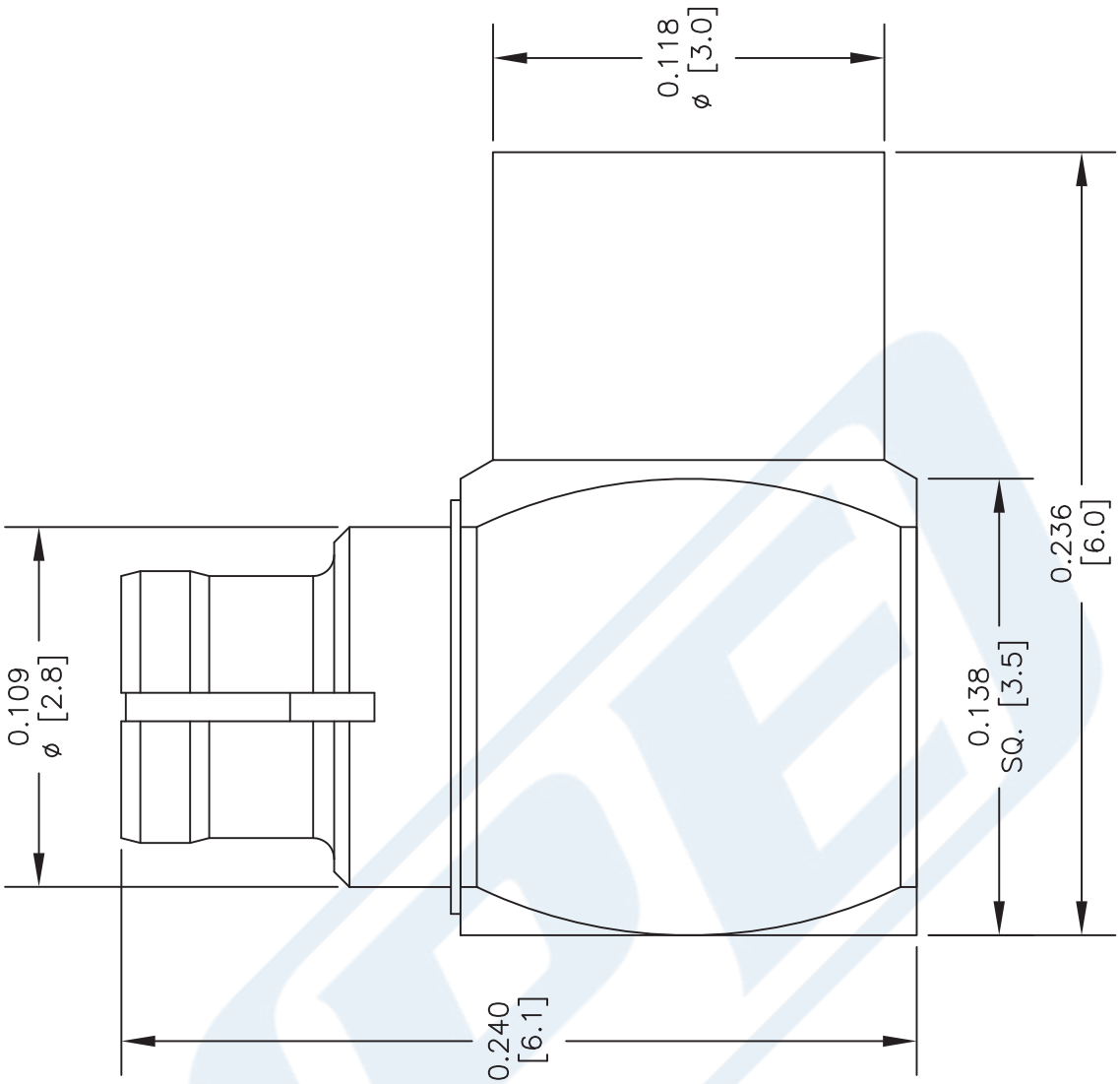

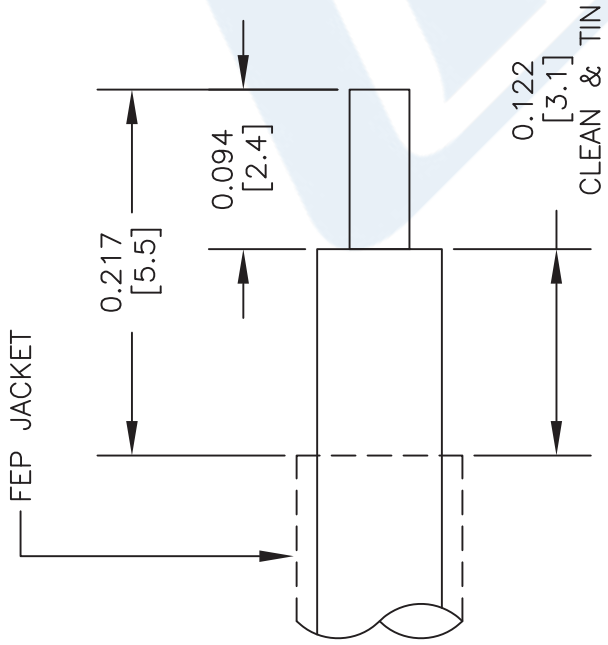

STRIPPING DIMENSIONS

ASSEMBLY PROCEDURES

1. STRIP CABLE AS SHOWN. DO NOT NICK CENTER CONDUCTOR.
2. BEFORE SOLDERING TO BODY CLEAN & TIN CABLE OUTER CONDUCTOR.
3. SOLDER CONTACT TO CENTER CONDUCTOR.
4. INSERT CABLE INTO BODY UNTIL OUTER CONDUCTOR BOTTOMS OUT. SOLDER OUTER CONDUCTOR TO BODY.

NOTES:
1. UNLESS OTHERWISE SPECIFIED ALL DIMENSIONS ARE NOMINAL.
2. ALL SPECIFICATIONS ARE SUBJECT TO CHANGE WITHOUT NOTICE AT ANY TIME.
3. DIMENSIONS ARE IN INCHES [mm].
4. FITS MIL-C-17 AND EQUIVALENT CABLES.

DWG TITLE PE44494	CAD FILE 081213	SCALE N/A	SIZE A	2233
FSCM NO. 53919			

PASTERNACK®
Pasternack Enterprises, Inc.
P.O. Box 16759 | Irvine | CA | 92623
Phone: (949) 261-1920 | **Fax:** (949) 261-7451
Website: www.pasternack.com | **E-Mail:** sales@pasternack.com

© 2016 Pasternack Enterprises All Rights Reserved

PASTERNACK®
THE ENGINEER'S RF SOURCE

SMP Male Bulkhead Mount Full Detent Connector Solder Attachment for RG405, PE-SR405FL Catchers Mitt

TECHNICAL DATA SHEET PE44962

Configuration

Connector	SMP Male, Full Detent
Connector Specification	MIL-STD-348
Connector Interface Type	RG405, PE-SR405FL
Attachment Method (Shield/Contact)	Solder
Body Style	Straight
Mount Method	Bulkhead

Electrical Specifications

Impedance	50 Ohms

Mechanical Specifications

Size

Length	0.51 in [12.95 mm]
Width/Dia.	0.235 in [5.97 mm]
Weight	0.006 lbs [2.72 g]

Connector

Type	SMP Male
Contact Material and Plating	Beryllium Copper, Gold
Contact Plating Specification	MIL-G-45204
Coupling Nut Material and Plating	Passivated Stainless Steel
Coupling Nut Plating Specification	AMS-QQ-P-35
Body Material and Plating	Beryllium Copper, Gold
Body Plating Specification	MIL-G-45204
Dielectric Type	PTFE

Compliance Certifications (visit www.Pasternack.com for current document)

RoHS Compliant

Click the following link (or enter part number in "SEARCH" on website) to obtain additional part information including price, inventory and certifications: SMP Male Bulkhead Mount Full Detent Connector Solder Attachment for RG405, PE-SR-405FL Catchers Mitt PE44962

Pasternack Enterprises, Inc. • P.O. Box 16759, Irvine, CA 92623
Phone: (866) 727-8376 or (949) 261-1920 • **Fax:** (949) 261-7451
Sales@Pasternack.com • Techsupport@Pasternack.com

© 2014 Pasternack Enterprises All Rights Reserved

SMP Male Bulkhead Mount Full Detent Connector Solder Attachment for RG405, PE-SR405FL Catchers Mitt

Plotted and Other Data

Notes:

- Values at +25 °C, sea level

SMP Male Bulkhead Mount Full Detent Connector Solder Attachment for RG405, PE-SR405FL Catchers Mitt from Pasternack Enterprises has same day shipment for domestic and International orders. Our RF, microwave and millimeter wave products maintain a 99% availability and are part of the broadest selection in the industry.

Click the following link (or enter part number in "SEARCH" on website) to obtain additional part information including price, inventory and certifications: SMP Male Bulkhead Mount Full Detent Connector Solder Attachment for RG405, PE-SR405FL Catchers Mitt PE44962

URL: http://www.pasternack.com/smp-male-standard-rg405-pe-sr405fl-connector-pe44962-p.aspx

The information contained in this document is accurate to the best of our knowledge and representative of the part described herein. It may be necessary to make modifications to the part and/or the documentation of the part, in order to implement improvements. Pasternack reserves the right to make such changes as required. Unless otherwise stated, all specifications are nominal. Pasternack does not make any representation or warranty regarding the suitability of the part described herein for any particular purpose, and Pasternack does not assume any liability arising out of the use of any part or documentation.

Pasternack Enterprises, Inc. • P.O. Box 16759, Irvine, CA 92623
Phone: (866) 727-8376 or (949) 261-1920 • **Fax:** (949) 261-7451
Sales@Pasternack.com • Techsupport@Pasternack.com

© 2014 Pasternack Enterprises All Rights Reserved

PE44962 CAD Drawing

SMP Male Bulkhead Mount Full Detent Connector Solder Attachment for RG405, PE-SR405FL Catchers Mitt

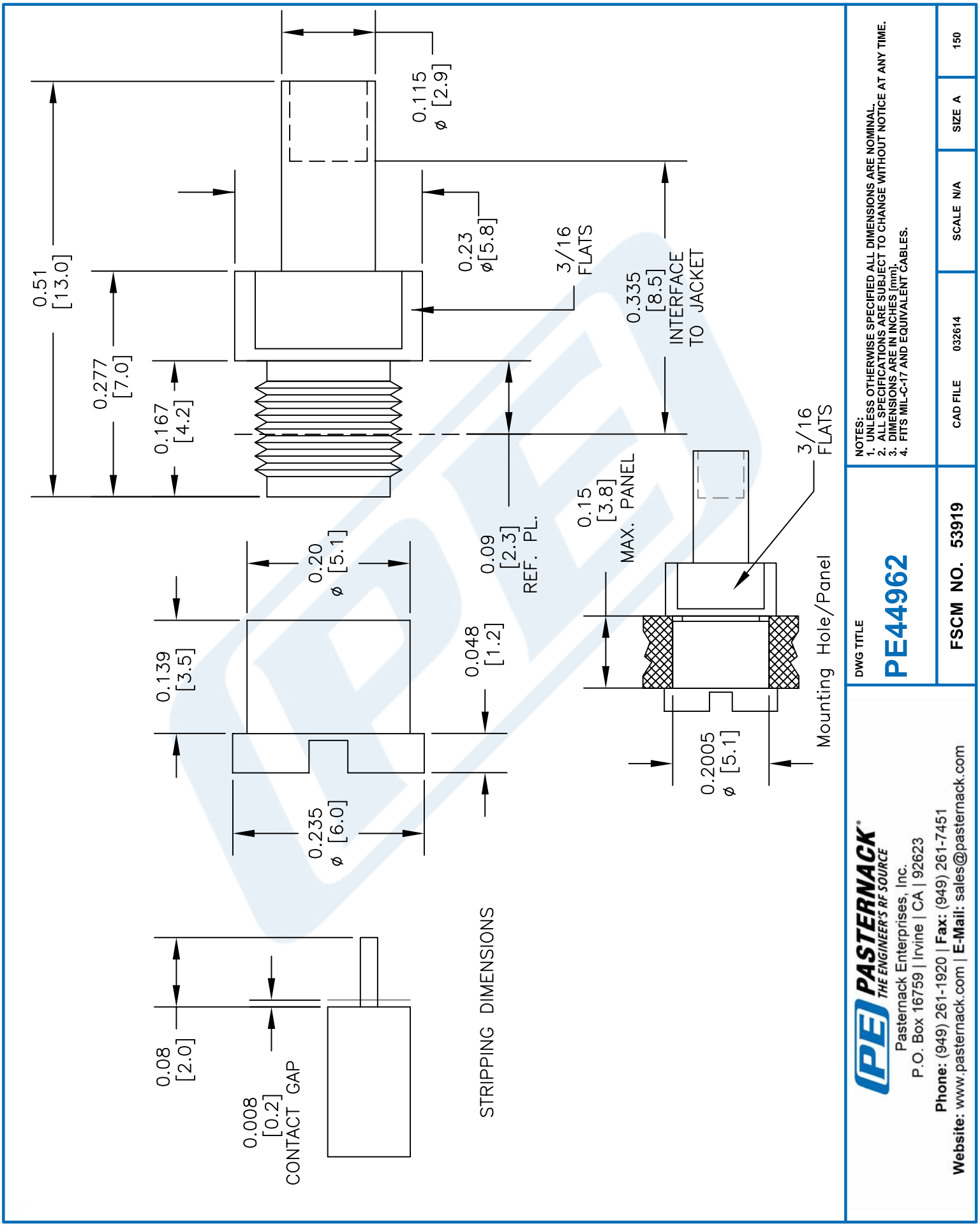

© 2014 Pasternack Enterprises All Rights Reserved

RG405 Coax Cable with Tinned Copper Outer Conductor

RF Cables
Technical Data Sheet

PE-SR405TN

Configuration

- Semi-Rigid Cable
- MIL-C-17
- 1 Shield(s)

Electrical Specifications

Description	Minimum	Typical	Maximum	Units
Frequency Range	DC		40	GHz
Impedance		50		Ohms

Performance by Frequency Band

Description	F1	F2	F3	F4	F5	Units
Frequency	1	10	20			GHz
Attenuation, Typ	22	80	120			dB/100ft
	72.18	262.47	393.7			dB/100m
Input Power (CW), Max	130	35	20			Watts

Mechanical Specifications

Min. Bend Radius (Installation) 0.05 in [1.27 mm]

Construction Specifications

Description	Material and Plating	Diameter
Inner Conductor	Copper Clad Steel, Silver, 1 Strands	0.02 in [0.51 mm]
Conductor Type	Solid	
Dielectric	PTFE	0.066 in [1.68 mm]
First Shield	Tinned Copper	

Click the following link (or enter part number in “SEARCH” on website) to obtain additional part information including price, inventory and certifications: RG405 Tinned Coax Cable with Tinned Copper Outer Conductor PE-SR405TN

Pasternack Enterprises, Inc. • P.O. Box 16759, Irvine, CA 92623
Phone: (866) 727-8376 or (949) 261-1920 • **Fax:** (949) 261-7451
Sales@Pasternack.com • Techsupport@Pasternack.com

© 2018 Pasternack Enterprises All Rights Reserved

RG405 Coax Cable with Tinned Copper Outer Conductor

Environmental Specifications

Temperature

Operating Range	-55 to +125 deg C

Compliance Certifications (see product page for current document)

Plotted and Other Data

Notes:

RG405 Coax Cable with Tinned Copper Outer Conductor from Pasternack Enterprises has same day shipment for domestic and International orders. Our RF, microwave and millimeter wave products maintain a 99.4% availability and are part of the broadest selection in the industry.

Click the following link (or enter part number in "SEARCH" on website) to obtain additional part information including price, inventory and certifications: RG405 Tinned Coax Cable with Tinned Copper Outer Conductor PE-SR405TN

URL: https://www.pasternack.com/50-ohm-semi-rigid-rg405-tinned-tinned-copper-pe-sr405tn-p.aspx

The information contained in this document is accurate to the best of our knowledge and representative of the part described herein. It may be necessary to make modifications to the part and/or the documentation of the part, in order to implement improvements. Pasternack reserves the right to make such changes as required. Unless otherwise stated, all specifications are nominal. Pasternack does not make any representation or warranty regarding the suitability of the part described herein for any particular purpose, and Pasternack does not assume any liability arising out of the use of any part or documentation.

Pasternack Enterprises, Inc. • P.O. Box 16759, Irvine, CA 92623
Phone: (866) 727-8376 or (949) 261-1920 • **Fax:** (949) 261-7451
Sales@Pasternack.com • Techsupport@Pasternack.com

© 2018 Pasternack Enterprises All Rights Reserved

PE-SR405TN CAD Drawing

RG405 Coax Cable with Tinned Copper Outer Conductor

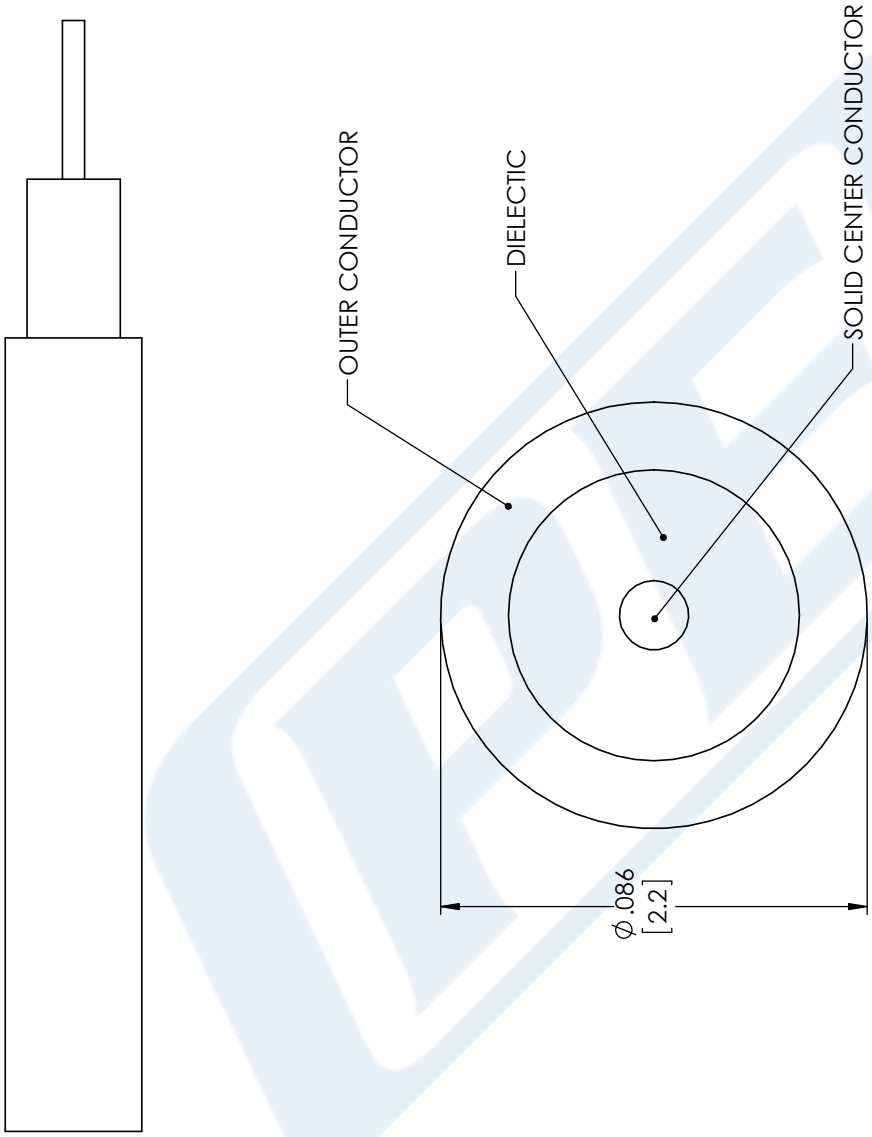

NOTES:
1. UNLESS OTHERWISE SPECIFIED ALL DIMENSIONS ARE NOMINAL.
2. ALL SPECIFICATIONS ARE SUBJECT TO CHANGE WITHOUT NOTICE AT ANY TIME
3. DIMENSIONS ARE IN INCHES [mm].

DWG TITLE
PE-SR405TN

CAD FILE 11/28/17 | SCALE N/A | SIZE A | CN2245

CAGE CODE 53919

STANDARD TOLERANCES	
.X	±0.2
.XX	±0.01
.XXX	±0.005

*STANDARD TOLERANCES APPLY ONLY TO DIMENSIONS IN INCHES

PASTERNACK®
THE ENGINEER'S RF SOURCE
Pasternack Enterprises, Inc.
P.O. Box 16759 | Irvine | CA | 92623
Phone: (949) 261-1920 | **Fax:** (949) 261-7451
Website: www.pasternack.com | **E-Mail:** sales@pasternack.com

© 2018 Pasternack Enterprises All Rights Reserved