PASTERNACK®
THE ENGINEER'S RF SOURCE

SMA Male Connector Crimp/Crimp Attachment for RG174, RG316, RG188, LMR-100, PE-B100, PE-C100, .100 inch

RF Connectors
Technical Data Sheet

PE4003

Configuration

- SMA Male Connector
- MIL-STD-348A
- 50 Ohms
- Straight Body Geometry
- RG174, RG316, RG188, LMR-100, PE-B100, PE-C100, .100 inch Interface Type
- Crimp/Crimp Attachment
- 5/16 inch Hex

Features

- Max. Operating Frequency 12.4 GHz
- Excellent VSWR of 1.21:1
- Gold Plated Brass Contact
- 30 µin minimum contact plating

Applications

- General Purpose Test
- Custom Cable Assemblies

Description

Pasternack's PE4003 SMA male connector with crimp/crimp attachment for RG174, RG316, RG188, LMR-100, PE-B100, PE-C100 and .100 inch is part of our full line of RF components available for same-day shipping. Our SMA male connector operates up to a maximum frequency of 12.4 GHz and offers excellent VSWR of 1.21:1.

Our SMA male connector PE4003 datasheet specifications and drawing with dimensions are shown below in this PDF. Pasternack's broad catalog of RF, microwave and millimeter wave connectors allows designers to configure and customize their signal connections however they like. Whether the need is to provide an I/O for a board design, or simply create a custom cable assembly configuration, Pasternack has the right connector for the job. Pasternack can also expertly build your custom cable assemblies for you and ship same-day.

Electrical Specifications

Description	Minimum	Typical	Maximum	Units
Frequency Range	DC		12.4	GHz
VSWR			1.21:1	
Operating Voltage (AC)			335	Vrms

Mechanical Specifications

Size	
Length	0.87 in [22.1 mm]
Width/Dia.	0.315 in [8.00 mm]
Weight	0.012 lbs [5.44 g]
Mating Torque	3 to 5 in-lbs [0.34 to 0.57 Nm]

Click the following link (or enter part number in "SEARCH" on website) to obtain additional part information including price, inventory and certifications: SMA Male Connector Crimp/Crimp Attachment for RG174, RG316, RG188, LMR-100, PE-B100, PE-C100, .100 inch PE4003

Pasternack Enterprises, Inc. • P.O. Box 16759, Irvine, CA 92623
Phone: (866) 727-8376 or (949) 261-1920 • **Fax:** (949) 261-7451
Sales@Pasternack.com • Techsupport@Pasternack.com

© 2018 Pasternack Enterprises All Rights Reserved

SMA Male Connector Crimp/Crimp Attachment for RG174, RG316, RG188, LMR-100, PE-B100, PE-C100, .100 inch

Material Specifications

Description	Material	Plating
Contact	Brass	Gold 30 µin minimum
Insulation	PTFE	
Body	Brass	Nickel 100 µin minimum
Coupling Nut	Brass	Nickel 100 µin minimum
Crimp Sleeve	Brass	Nickel

Environmental Specifications

Temperature

Operating Range -65 to +165 deg C

Compliance Certifications (see product page for current document)

Plotted and Other Data

Notes:

SMA Male Connector Crimp/Crimp Attachment for RG174, RG316, RG188, LMR-100, PE-B100, PE-C100, .100 inch from Pasternack Enterprises has same day shipment for domestic and International orders. Our RF, microwave and millimeter wave products maintain a 99.4% availability and are part of the broadest selection in the industry.

Click the following link (or enter part number in "SEARCH" on website) to obtain additional part information including price, inventory and certifications: SMA Male Connector Crimp/Crimp Attachment for RG174, RG316, RG188, LMR-100, PE-B100, PE-C100, .100 inch PE4003

URL: https://www.pasternack.com/sma-male-rg174-rg316-lmr-100-pe-b100-pe-c100-connector-pe4003-p.aspx

The information contained in this document is accurate to the best of our knowledge and representative of the part described herein. It may be necessary to make modifications to the part and/or the documentation of the part, in order to implement improvements. Pasternack reserves the right to make such changes as required. Unless otherwise stated, all specifications are nominal. Pasternack does not make any representation or warranty regarding the suitability of the part described herein for any particular purpose, and Pasternack does not assume any liability arising out of the use of any part or documentation.

Pasternack Enterprises, Inc. • P.O. Box 16759, Irvine, CA 92623
Phone: (866) 727-8376 or (949) 261-1920 • **Fax:** (949) 261-7451
Sales@Pasternack.com • Techsupport@Pasternack.com

© 2018 Pasternack Enterprises All Rights Reserved

PE4003 CAD Drawing

SMA Male Connector Crimp/Crimp Attachment for RG174, RG316, RG188, LMR-100, PE-B100, PE-C100, .100 inch

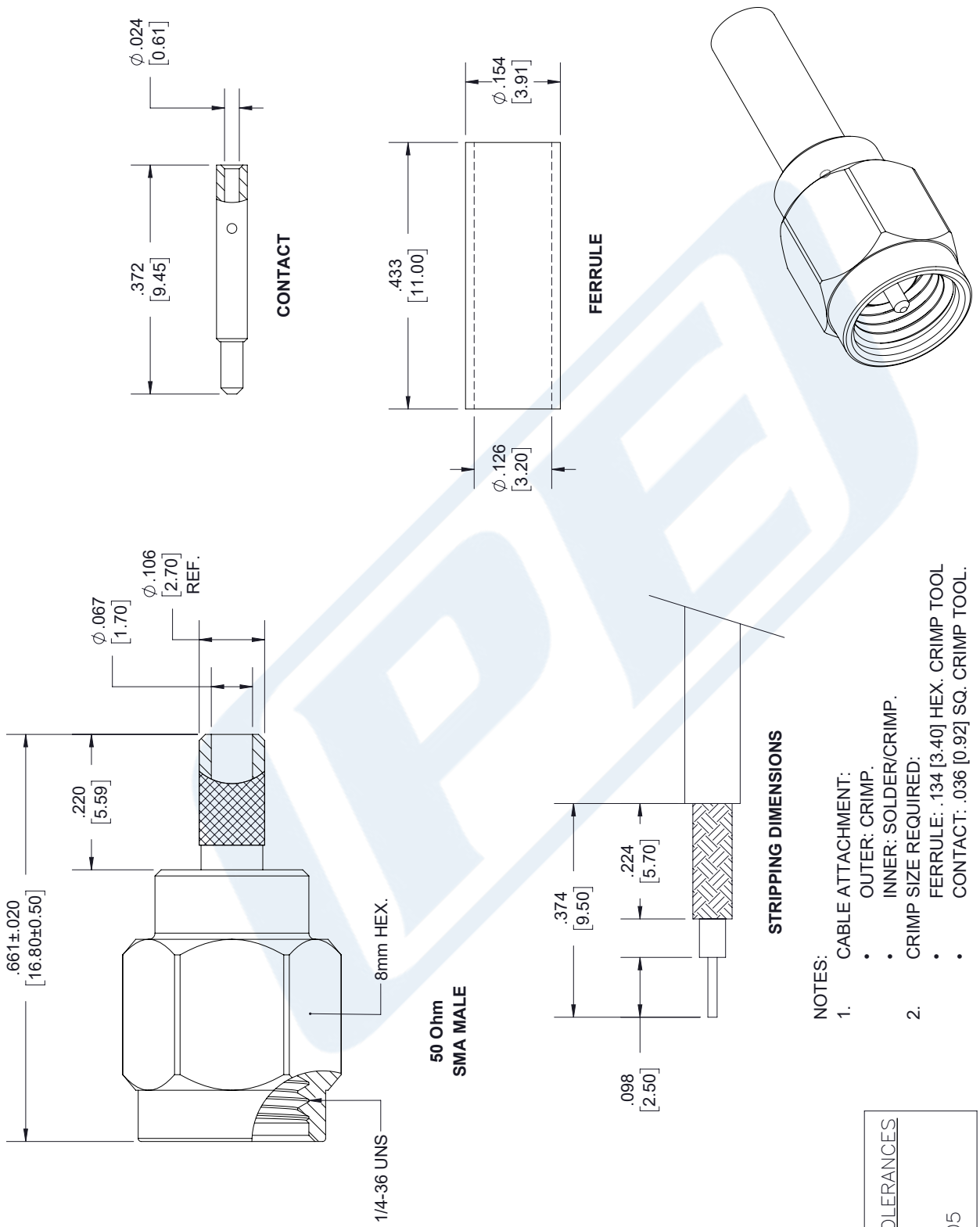

NOTES:
1. CABLE ATTACHMENT:
   - OUTER: CRIMP.
   - INNER: SOLDER/CRIMP.
2. CRIMP SIZE REQUIRED:
   - FERRULE: .134 [3.40] HEX. CRIMP TOOL
   - CONTACT: .036 [0.92] SQ. CRIMP TOOL.

STANDARD TOLERANCES	
.X	±0.2
.XX	±0.01
.XXX	±0.005

*STANDARD TOLERANCES APPLY ONLY TO DIMENSIONS IN INCHES

NOTES:
1. UNLESS OTHERWISE SPECIFIED ALL DIMENSIONS ARE NOMINAL.
2. ALL SPECIFICATIONS ARE SUBJECT TO CHANGE WITHOUT NOTICE AT ANY TIME.
3. DIMENSIONS ARE IN INCHES [mm].

DWG TITLE: PE4003

CAD FILE 11/16/18 | SCALE N/A | SIZE A | 7361

CAGE CODE 53919

PASTERNACK® THE ENGINEER'S RF SOURCE
Pasternack Enterprises, Inc.
P.O. Box 16759 | Irvine | CA | 92623
Phone: (949) 261-1920 | **Fax:** (949) 261-7451
Website: www.pasternack.com | **E-Mail:** sales@pasternack.com

© 2018 Pasternack Enterprises All Rights Reserved

NOTICE OF PROPRIETARY RIGHTS THIS DOCUMENT CONTAINS CONFIDENTIAL TECHNICAL DATA, INCLUDING TRADE SECRETS, PROPRIETARY TO TIMES MICROWAVE SYSTEMS. DISCLOSURE OF THIS DATA IS EXPRESSLY CONDITIONED UPON YOUR ASSENT THAT ITS USE IS LIMITED TO USE WITHIN YOUR COMPANY ONLY. ANY OTHER USE IS STRICTLY PROHIBITED WITHOUT THE PRIOR WRITTEN CONSENT OF TIMES MICROWAVE SYSTEMS.

SYM	REVISION DESCRIPTION	DFTM	DATE	APPD	DATE
–	RELEASED FOR PRODUCTION	J.C.L.	8/20/03	J.C.L.	8/20/03
A	CHANGED PER CDC #36704	D.J.H.	1/14/13	J.D.B.	1/15/13
B	CHANGED PER CDC #37206	J.D.B.	3/226/13	J.D.B.	3/26/13

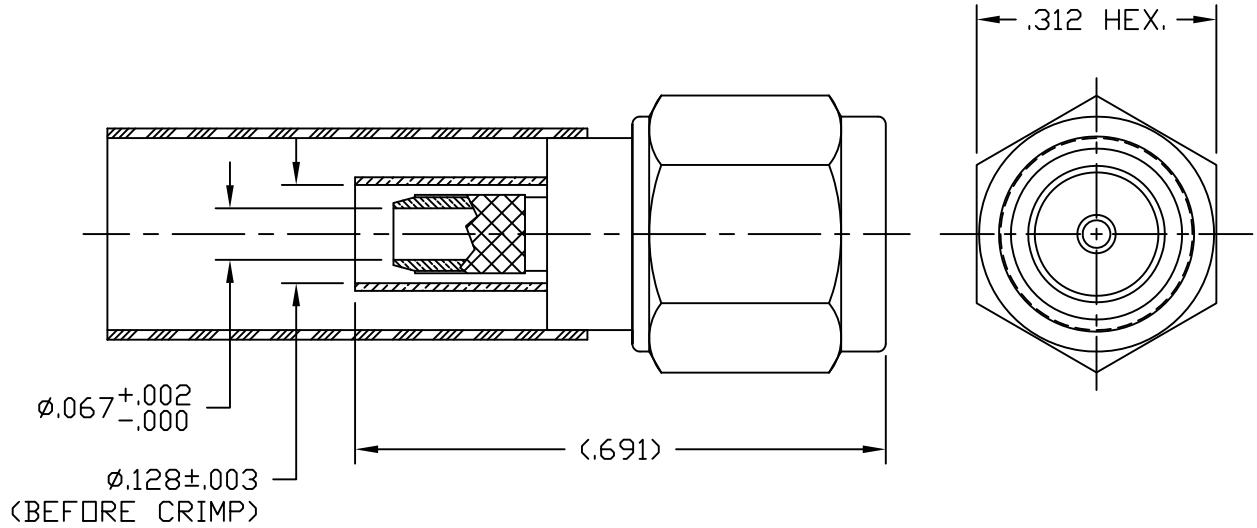

NOTES:

1. ASSEMBLED CONNECTOR INTERFACE IS DESIGNED IN ACCORDANCE WITH MIL-STD-348.

2. MATERIAL: BODY & HEX COUPLING NUT- CORROSION RESISTANT STEEL PER ASTM A582.
   CONTACT - BERYLLIUM COPPER PER ASTM B196.
   INSULATOR - TEFLON PER ASTM D1710
   GASKET - SILICONE RUBBER PER ZZ-R-765
   SHRINK SLEEVE - SHRINKABLE POLYOLEFIN PER MIL-I-23053/5
   FERRULE - D.H.P. COPPER CDA ALLOY 122

3. FINISHES: BODY & HEX COUPLING NUT - PASSIVATE PER QQ-P-35
   CONTACT - GOLD PLATE PER MIL-G-45204
   FERRULE - SULFAMATE NICKEL PLATE

4. CONTACT PIN IS SOLDERED.

5. CRIMP THE FERRULE TO .128" HEX.

MATL:	UNLESS OTHERWISE SPECIFIED ALL DIMENSIONS ARE IN INCHES MACHINED SURFACES FINISH N/A RMS MAX. REMOVE ALL BURRS .005 MAX. BREAK MACHINE CORNERS .005 MAX. FILLET R. TOLERANCES ON DECIMALS .XX ±.03 .XXX ±.005 ANGLES ±1° FRACTIONS ±1/32	DFTM. J. C. L. DATE 8/20/03 CHKD. J. C. L. DATE 8/20/03 APPD. J. C. L. DATE 8/20/03	TIMES MICROWAVE SYSTEMS **TC-100-SM** SMA MALE FOR LMR100 CABLE
USED ON: A			
SCALE: N/A DWG. SIZE A	DO NOT SCALE DRAWING CODE IDENT 68999		SHT. 1 of 1 SD3190-1551 REV. B

TIMES MICROWAVE SYSTEMS
358 Hall Avenue/P.O. Box 5039
Wallingford, CT 06492-5039
Tel: 203-949-8400
FAX: 203-949-8423
1-800-TMS-COAX
www.timesmicrowave.com

INSTALLATION INSTRUCTIONS
TC-100-SM (TIMES 3190-1551)
(Cable Types: LMR-100)

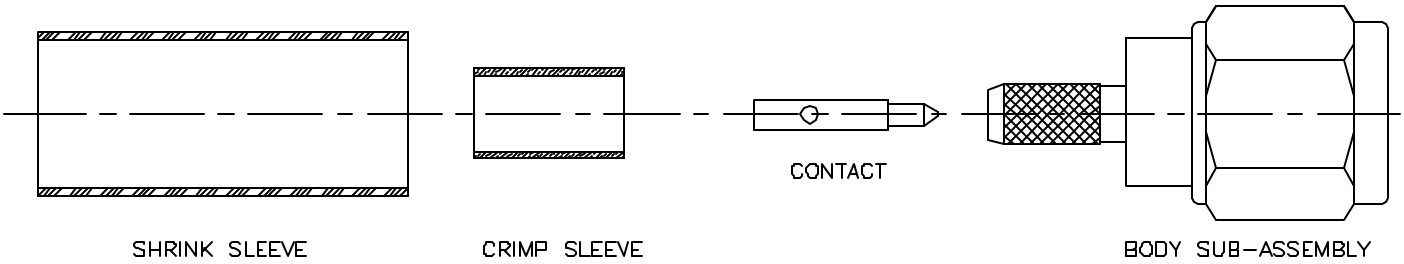

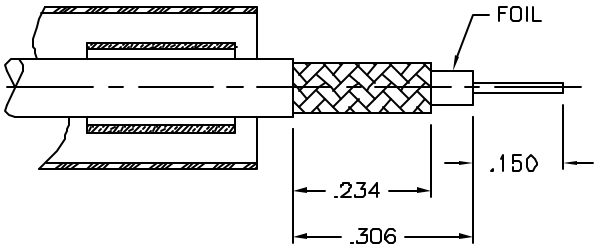

1) A. Trim cable to dimensions shown. Slide shrink sleeve & crimp sleeve back onto cable.

B. Remove any residual plastic from the center conductor and deburr center conductor using a fine file.

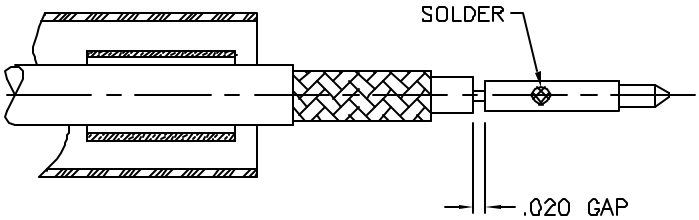

2) A. Slide contact onto center conductor leaving a .020 gap as shown and solder to center conductor. Use minimal heat to minimize melting of foam dielectric. Inspect to be sure aluminum foil is not touching center contact.

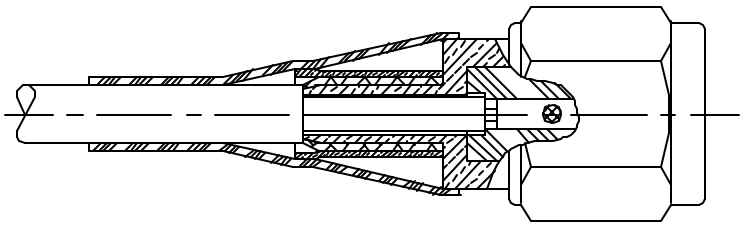

3) A. Insert cable into connnector until fully seated, with all braid wires on the outside of connector body and aluminum tape inside connector body.

B. Slide crimp sleeve forward and crimp as close as possible to body using a .128" hex die. Use Times HX-4 crimp tool or equivalent. Do not crimp rear of crimp sleeve.

C. Heat shrink weather seal over rear of connector body and down onto cable jacket using hot air gun.

Flexible RG174 Coax Cable Single Shielded with Black PVC Jacket

RF Cables
Technical Data Sheet

RG174A/U

Times Microwave Systems Coax Cable Specification

Configuration

- Flexible Cable
- 1 Shield(s)

Electrical Specifications

Description	Minimum	Typical	Maximum	Units
Frequency Range	DC		1,000	MHz
Impedance		50		Ohms
Velocity of Propagation		66		%
Nominal Capacitance		31.08 [101.97]		pF/ft [pF/m]

Performance by Frequency Band

Description	F1	F2	F3	F4	F5	Units
Frequency	100	400	1,000			MHz
Attenuation, Typ	8.4	19	32			dB/100ft
	27.56	62.34	104.99			dB/100m

Mechanical Specifications

Diameter	0.11 in [2.79 mm]
Weight	0.009 lbs/ft [0.01 Kg/m]

Construction Specifications

Description	Material and Plating	Diameter
Inner Conductor	Copper Clad Steel, 7 Strands	0.019 in [0.48 mm]
Conductor Type	Stranded	
Dielectric	PE	0.06 in [1.52 mm]
First Shield	Tinned Copper Braid	0.078 in [1.98 mm]

Click the following link (or enter part number in “SEARCH” on website) to obtain additional part information including price, inventory and certifications: Flexible RG174 Coax Cable Single Shielded with Black PVC Jacket RG174A/U

Pasternack Enterprises, Inc. • P.O. Box 16759, Irvine, CA 92623
Phone: (866) 727-8376 or (949) 261-1920 • **Fax:** (949) 261-7451
Sales@Pasternack.com • Techsupport@Pasternack.com

© 2018 Pasternack Enterprises All Rights Reserved

Jacket	PVC, Black	0.11 in [2.79 mm]

Environmental Specifications

Temperature

Operating Range	-40 to +80 deg C

Compliance Certifications (see product page for current document)

Plotted and Other Data

Notes:

Flexible RG174 Coax Cable Single Shielded with Black PVC Jacket from Pasternack Enterprises has same day shipment for domestic and International orders. Our RF, microwave and millimeter wave products maintain a 99.4% availability and are part of the broadest selection in the industry.

Click the following link (or enter part number in "SEARCH" on website) to obtain additional part information including price, inventory and certifications: Flexible RG174 Coax Cable Single Shielded with Black PVC Jacket RG174A/U

URL: https://www.pasternack.com/flexible-0.100-rg174-50-ohm-coax-cable-pvc-jacket-rg174a-u-p.aspx

The information contained in this document is accurate to the best of our knowledge and representative of the part described herein. It may be necessary to make modifications to the part and/or the documentation of the part, in order to implement improvements. Pasternack reserves the right to make such changes as required. Unless otherwise stated, all specifications are nominal. Pasternack does not make any representation or warranty regarding the suitability of the part described herein for any particular purpose, and Pasternack does not assume any liability arising out of the use of any part or documentation.

Pasternack Enterprises, Inc. • P.O. Box 16759, Irvine, CA 92623
Phone: (866) 727-8376 or (949) 261-1920 • **Fax:** (949) 261-7451
Sales@Pasternack.com • Techsupport@Pasternack.com

© 2018 Pasternack Enterprises All Rights Reserved

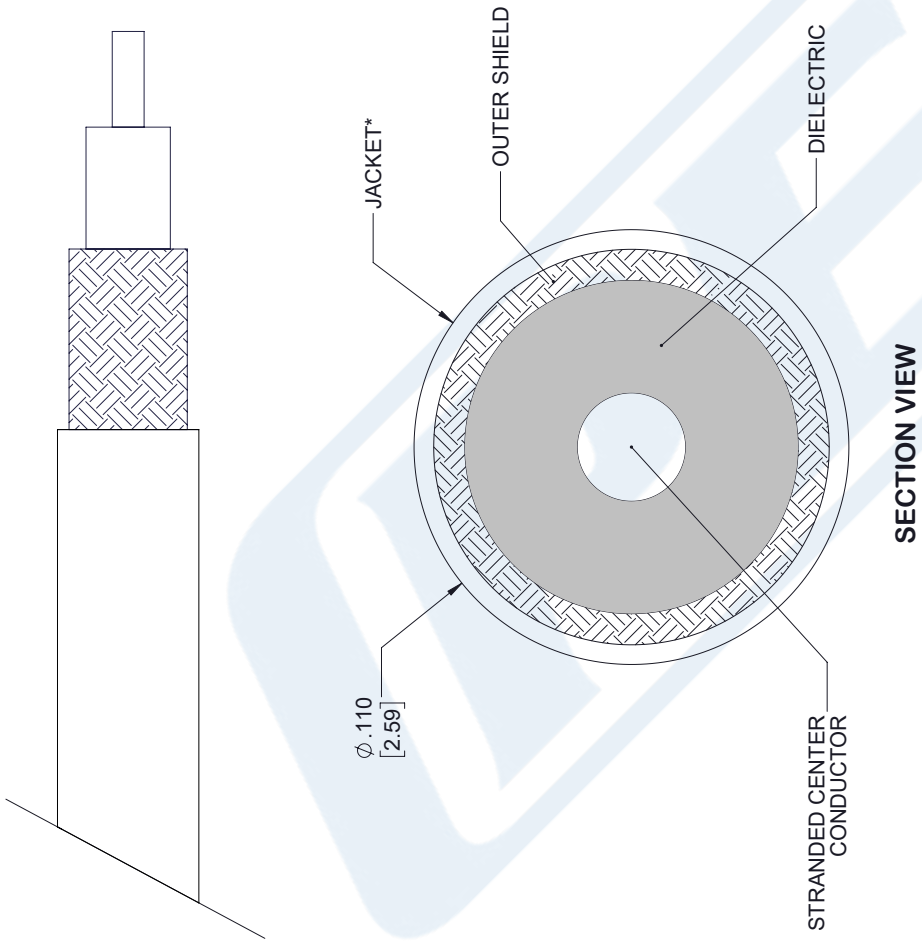

NOTE:
*STANDARD TOLERANCES APPLY ONLY TO DIMENSIONS IN INCHES

STANDARD TOLERANCES	
.X	±0.2
.XX	±0.01
.XXX	±0.005

NOTES:
1. UNLESS OTHERWISE SPECIFIED ALL DIMENSIONS ARE NOMINAL.
2. ALL SPECIFICATIONS ARE SUBJECT TO CHANGE WITHOUT NOTICE AT ANY TIME
3. DIMENSIONS ARE IN INCHES [mm].

DWG TITLE RG174A/U

CAD FILE 05/25/18 | SCALE N/A | SIZE A | 7361

CAGE CODE 53919

PASTERNACK® THE ENGINEER'S RF SOURCE
Pasternack Enterprises, Inc.
P.O. Box 16759 | Irvine | CA | 92623
Phone: (949) 261-1920 | **Fax:** (949) 261-7451
Website: www.pasternack.com | **E-Mail:** sales@pasternack.com

© 2018 Pasternack Enterprises All Rights Reserved