PASTERNACK
an INFINITE brand

# 75 Ohm F Male Connector Crimp/Solder Attachment for RG179, RG187

RF Connectors
Technical Data Sheet

PE45520

## Configuration

- F Male Connector
- 75 Ohms
- Straight Body Geometry
- Connector Interface Types: RG179, RG187
- 7/16 inch Hex

## Features

- Max. Operating Frequency 1 GHz
- Good VSWR of 1.35:1
- Gold Plated Brass Contact

## Applications

- General Purpose Test
- Custom Cable Assemblies
- CATV

### Description

Pasternack's PE45520 75 ohm type F male connector with crimp/solder attachment for RG179 and RG187 is part of our full line of RF components available for same-day shipping. Our type F male connector operates up to a maximum frequency of 1 GHz and offers good VSWR of 1.35:1.

Our 75 ohm type F male connector PE45520 datasheet specifications and drawing with dimensions are shown below in this PDF. Pasternack's broad catalog of RF, microwave and millimeter wave connectors allows designers to configure and customize their signal connections however they like. Whether the need is to provide an I/O for a board design, or simply create a custom cable assembly configuration, Pasternack has the right connector for the job. Pasternack can also expertly build your custom cable assemblies for you and ship same-day.

### Electrical Specifications

| Description | Minimum | Typical | Maximum | Units |
|---|---|---|---|---|
| Frequency Range | DC | | 1,000 | MHz |
| VSWR | | | 1.35:1 | |
| Operating Voltage (AC) | | | 500 | Vrms |

### Mechanical Specifications

**Size**

| | |
|---|---|
| Length | 0.845 in [21.46 mm] |
| Width/Dia. | 0.433 in [11.00 mm] |
| Weight | 0.01 lbs [4.54 g] |
| Mating Torque | 12 to 15 in-lbs [1.36 to 1.70 Nm] |

Click the following link (or enter part number in "SEARCH" on website) to obtain additional part information including price, inventory and certifications: 75 Ohm F Male Connector Crimp/Solder Attachment for RG179, RG187 PE45520

Pasternack Enterprises, Inc. • P.O. Box 16759, Irvine, CA 92623
**Phone:** (866) 727-8376 or (949) 261-1920 • **Fax:** (949) 261-7451
Sales@Pasternack.com • Techsupport@Pasternack.com

© 2019 Pasternack Enterprises All Rights Reserved

# 75 Ohm F Male Connector Crimp/Solder Attachment for RG179, RG187



**Material Specifications**

| Description | Material | Plating |
|---|---|---|
| Contact | Brass | Gold |
| Insulation | PTFE | |
| Body | Brass | Nickel |
| Coupling Nut | Brass | Nickel |

## Environmental Specifications

**Compliance Certifications** (see product page for current document)

## Plotted and Other Data

Notes:

75 Ohm F Male Connector Crimp/Solder Attachment for RG179, RG187 from Pasternack Enterprises has same day shipment for domestic and International orders. Our RF, microwave and millimeter wave products maintain a 99.4% availability and are part of the broadest selection in the industry.

Click the following link (or enter part number in “SEARCH” on website) to obtain additional part information including price, inventory and certifications: 75 Ohm F Male Connector Crimp/Solder Attachment for RG179, RG187 PE45520

URL: https://www.pasternack.com/f-male-rg179-rg187-connector-pe45520-p.aspx

The information contained in this document is accurate to the best of our knowledge and representative of the part described herein. It may be necessary to make modifications to the part and/or the documentation of the part, in order to implement improvements. Pasternack reserves the right to make such changes as required. Unless otherwise stated, all specifications are nominal. Pasternack does not make any representation or warranty regarding the suitability of the part described herein for any particular purpose, and Pasternack does not assume any liability arising out of the use of any part or documentation.

Pasternack Enterprises, Inc. • P.O. Box 16759, Irvine, CA 92623
**Phone:** (866) 727-8376 or (949) 261-1920 • **Fax:** (949) 261-7451
Sales@Pasternack.com • Techsupport@Pasternack.com

© 2019 Pasternack Enterprises All Rights Reserved

# PE45520 CAD Drawing

75 Ohm F Male Connector Crimp/Solder Attachment for RG179, RG187

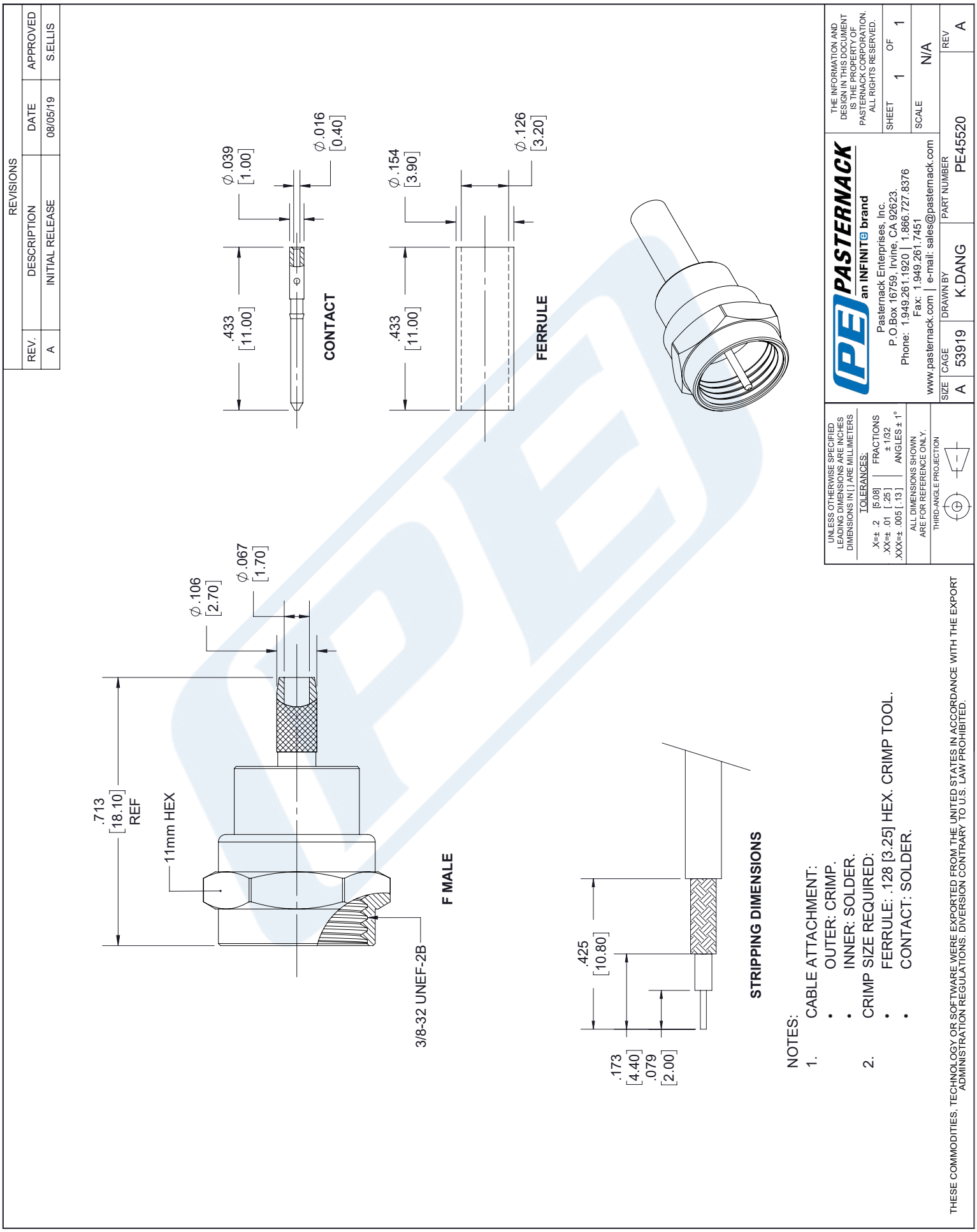

PASTERNACK®
THE ENGINEER'S RF SOURCE

# 75 Ohm Mini SMB Plug Right Angle Connector Crimp/Solder Attachment for RG179, RG187

RF Connectors
Technical Data Sheet

PE4995

## Configuration

- Standard Mini SMB Plug Standard Connector
- 75 Ohms
- Right Angle Body Geometry
- RG179, RG187 Interface Type
- Crimp/Solder Attachment

## Features

- Max. Operating Frequency 2 GHz
- Gold Plated Beryllium Copper Contact
- 30 µin minimum contact plating

## Applications

- General Purpose Test
- Custom Cable Assemblies

### Description

Pasternack's PE4995 75 ohm Mini SMB plug right angle connector with crimp/solder attachment for RG179 and RG187 is part of our full line of RF components available for same-day shipping. Our Mini SMB plug connector operates up to a maximum frequency of 2 GHz. Its right angle body geometry allows for easier connections in tight spaces.

Our 75 ohm Mini SMB plug right angle connector PE4995 datasheet specifications and drawing with dimensions are shown below in this PDF. Pasternack's broad catalog of RF, microwave and millimeter wave connectors allows designers to configure and customize their signal connections however they like. Whether the need is to provide an I/O for a board design, or simply create a custom cable assembly configuration, Pasternack has the right connector for the job. Pasternack can also expertly build your custom cable assemblies for you and ship same-day.

### Electrical Specifications

| Description | Minimum | Typical | Maximum | Units |
|---|---|---|---|---|
| Frequency Range | DC | | 2 | GHz |
| Operating Voltage (AC) | | | 335 | Vrms |

### Mechanical Specifications

| | |
|---|---|
| **Size** | |
| Length | 0.528 in [13.41 mm] |
| Width/Dia. | 0.256 in [6.50 mm] |
| Height | 0.506 in [12.85 mm] |
| Weight | 0.012 lbs [5.44 g] |

Click the following link (or enter part number in "SEARCH" on website) to obtain additional part information including price, inventory and certifications: 75 Ohm Mini SMB Plug Right Angle Connector Crimp/Solder Attachment for RG179, RG187 PE4995

Pasternack Enterprises, Inc. • P.O. Box 16759, Irvine, CA 92623
**Phone:** (866) 727-8376 or (949) 261-1920 • **Fax:** (949) 261-7451
Sales@Pasternack.com • Techsupport@Pasternack.com

© 2018 Pasternack Enterprises All Rights Reserved

# 75 Ohm Mini SMB Plug Right Angle Connector Crimp/Solder Attachment for RG179, RG187



**Material Specifications**

| Description | Material | Plating |
|---|---|---|
| Contact | Beryllium Copper | Gold<br>30 µin minimum |
| Insulation | PTFE | |
| Body | Brass | Nickel<br>100 µin minimum |

## Environmental Specifications

**Temperature**

Operating Range -65 to +165 deg C

## Compliance Certifications (see product page for current document)

## Plotted and Other Data

Notes:

75 Ohm Mini SMB Plug Right Angle Connector Crimp/Solder Attachment for RG179, RG187 from Pasternack Enterprises has same day shipment for domestic and International orders. Our RF, microwave and millimeter wave products maintain a 99.4% availability and are part of the broadest selection in the industry.

Click the following link (or enter part number in "SEARCH" on website) to obtain additional part information including price, inventory and certifications: 75 Ohm Mini SMB Plug Right Angle Connector Crimp/Solder Attachment for RG179, RG187 PE4995

URL: https://www.pasternack.com/mini-smb-plug-standard-rg179-rg187-connector-pe4995-p.aspx

The information contained in this document is accurate to the best of our knowledge and representative of the part described herein. It may be necessary to make modifications to the part and/or the documentation of the part, in order to implement improvements. Pasternack reserves the right to make such changes as required. Unless otherwise stated, all specifications are nominal. Pasternack does not make any representation or warranty regarding the suitability of the part described herein for any particular purpose, and Pasternack does not assume any liability arising out of the use of any part or documentation.

Pasternack Enterprises, Inc. • P.O. Box 16759, Irvine, CA 92623
**Phone:** (866) 727-8376 or (949) 261-1920 • **Fax:** (949) 261-7451
Sales@Pasternack.com • Techsupport@Pasternack.com

© 2018 Pasternack Enterprises All Rights Reserved

# PE4995 CAD Drawing

75 Ohm Mini SMB Plug Right Angle Connector Crimp/
Solder Attachment for RG179, RG187

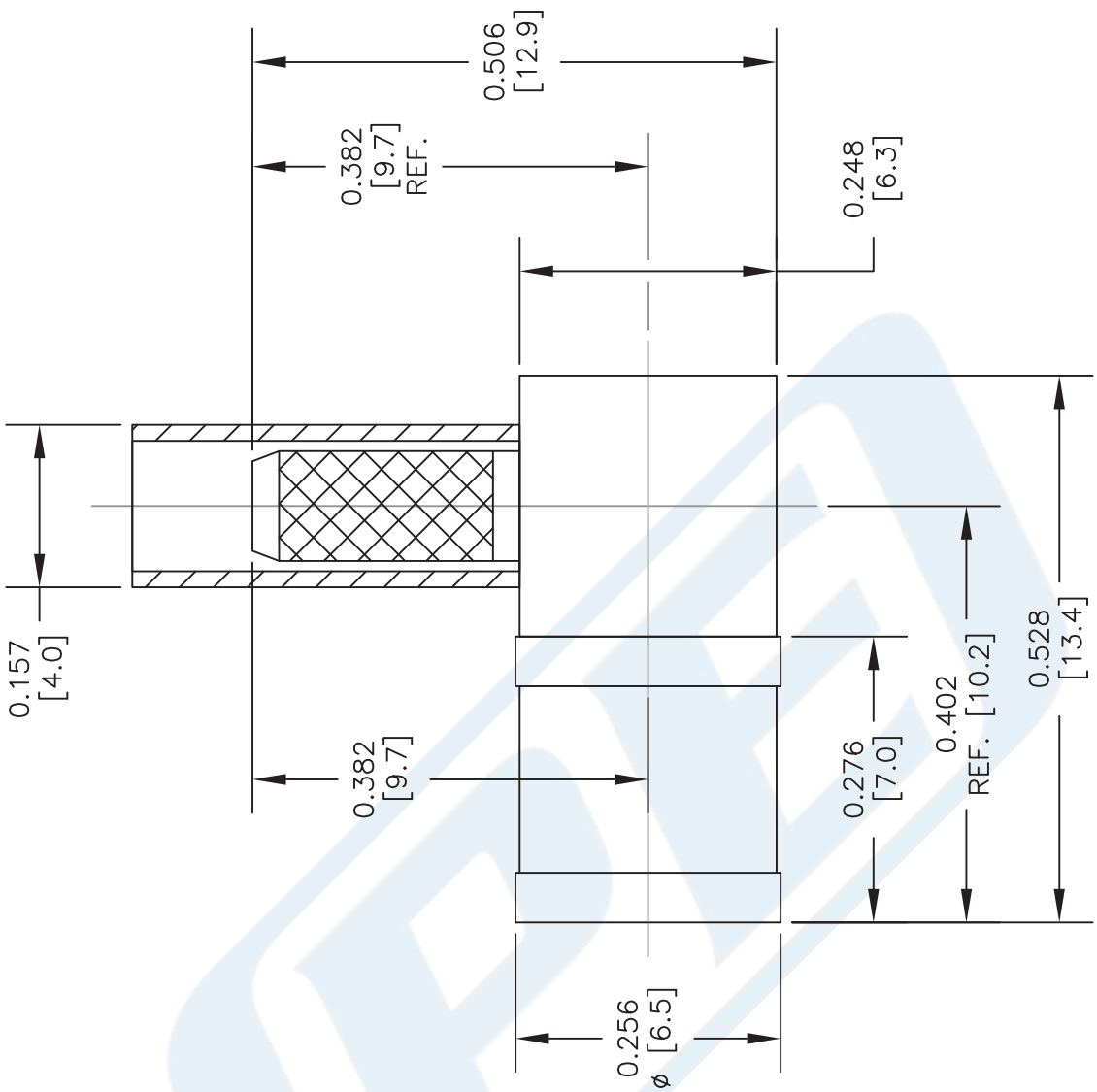


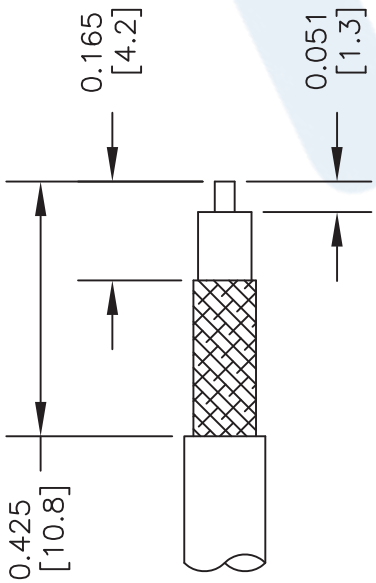


STRIPPING DIMENSIONS

ASSEMBLY PROCEDURES

1. STRIP CABLE AS SHOWN & TIN CENTER CONDUCTOR. SLIDE FERRULE OVER CABLE.
2. INSTALL CABLE INTO BODY OF CONNECTOR & SOFT SOLDER CENTER CONDUCTOR IN PLACE.
3. CRIMP FERRULE & PRESS CAP DOWN.

CRIMP SIZE REQUIRED

FERRULE: .128" HEX CRIMP TOOL

STANDARD TOLERANCES
.X ±0.2
.XX ±0.1
.XXX ±0.05

*STANDARD TOLERANCES APPLY ONLY TO DIMENSIONS IN INCHES

NOTES:
1. UNLESS OTHERWISE SPECIFIED ALL DIMENSIONS ARE NOMINAL.
2. ALL SPECIFICATIONS ARE SUBJECT TO CHANGE WITHOUT NOTICE AT ANY TIME.
3. DIMENSIONS ARE IN INCHES [mm].

DWG TITLE
PE4995

CAD FILE 060617 | SCALE N/A | SIZE A | 2233

CAGE CODE 53919

PASTERNACK®
THE ENGINEER'S RF SOURCE
Pasternack Enterprises, Inc.
P.O. Box 16759 | Irvine | CA | 92623
**Phone:** (949) 261-1920 | **Fax:** (949) 261-7451
**Website:** www.pasternack.com | **E-Mail:** sales@pasternack.com

© 2018 Pasternack Enterprises All Rights Reserved

# 75 Ohm Flexible RG179 Coax Cable Single Shielded with Tan FEP Jacket



## Configuration

- Flexible Cable
- 1 Shield(s)

### Electrical Specifications

| Description | Minimum | Typical | Maximum | Units |
|---|---|---|---|---|
| Frequency Range | DC | | 3 | GHz |
| Impedance | | 75 | | Ohms |
| Velocity of Propagation | | 70 | | % |
| Operating Voltage (AC) | | | 900 | Vrms |
| Nominal Capacitance | | 19.4 [63.65] | | pF/ft [pF/m] |

### Performance by Frequency Band

| Description | F1 | F2 | F3 | F4 | F5 | Units |
|---|---|---|---|---|---|---|
| Frequency | 100 | 400 | 1,000 | | | MHz |
| Attenuation, Typ | 9.06 | 18.4 | 30 | | | dB/100ft |
| | 29.72 | 60.37 | 98.43 | | | dB/100m |

### Mechanical Specifications

| | |
|---|---|
| Diameter | 0.1 in [2.54 mm] |
| Weight | 0.01 lbs/ft [0.01 Kg/m] |
| Min. Bend Radius (Repeated) | 0.4 in [10.16 mm] |

### Construction Specifications

| Description | Material and Plating | Diameter |
|---|---|---|
| Inner Conductor | Copper Clad Steel, Silver, 7 Strands | 0.012 in [0.3 mm] |
| Conductor Type | Stranded | |
| Dielectric | PTFE | 0.063 in [1.6 mm] |
| First Shield | Silver Plated Copper Braid | 0.08 in [2.03 mm] |

Click the following link (or enter part number in “SEARCH” on website) to obtain additional part information including price, inventory and certifications: 75 Ohm Flexible RG179 Coax Cable Single Shielded with Tan FEP Jacket RG179B/U

Pasternack Enterprises, Inc. • P.O. Box 16759, Irvine, CA 92623
**Phone:** (866) 727-8376 or (949) 261-1920 • **Fax:** (949) 261-7451
Sales@Pasternack.com • Techsupport@Pasternack.com

© 2017 Pasternack Enterprises All Rights Reserved

# 75 Ohm Flexible RG179 Coax Cable Single Shielded with Tan FEP Jacket



| | | |
|---|---|---|
| Jacket | FEP, Tan | 0.1 in [2.54 mm] |

## Environmental Specifications

**Temperature**

| | |
|---|---|
| Operating Range | -55 to +200 deg C |

## Compliance Certifications (see product page for current document)

## Plotted and Other Data

Notes:

75 Ohm Flexible RG179 Coax Cable Single Shielded with Tan FEP Jacket from Pasternack Enterprises has same day shipment for domestic and International orders. Our RF, microwave and millimeter wave products maintain a 99.4% availability and are part of the broadest selection in the industry.

Click the following link (or enter part number in "SEARCH" on website) to obtain additional part information including price, inventory and certifications: 75 Ohm Flexible RG179 Coax Cable Single Shielded with Tan FEP Jacket RG179B/U

URL: https://www.pasternack.com/flexible-0.100-rg179-75-ohm-coax-cable-fep-jacket-rg179b-u-p.aspx

The information contained in this document is accurate to the best of our knowledge and representative of the part described herein. It may be necessary to make modifications to the part and/or the documentation of the part, in order to implement improvements. Pasternack reserves the right to make such changes as required. Unless otherwise stated, all specifications are nominal. Pasternack does not make any representation or warranty regarding the suitability of the part described herein for any particular purpose, and Pasternack does not assume any liability arising out of the use of any part or documentation.

Pasternack Enterprises, Inc. • P.O. Box 16759, Irvine, CA 92623
**Phone:** (866) 727-8376 or (949) 261-1920 • **Fax:** (949) 261-7451
Sales@Pasternack.com • Techsupport@Pasternack.com

© 2017 Pasternack Enterprises All Rights Reserved

# RG179B/U CAD Drawing

75 Ohm Flexible RG179 Coax Cable Single Shielded with Tan FEP Jacket

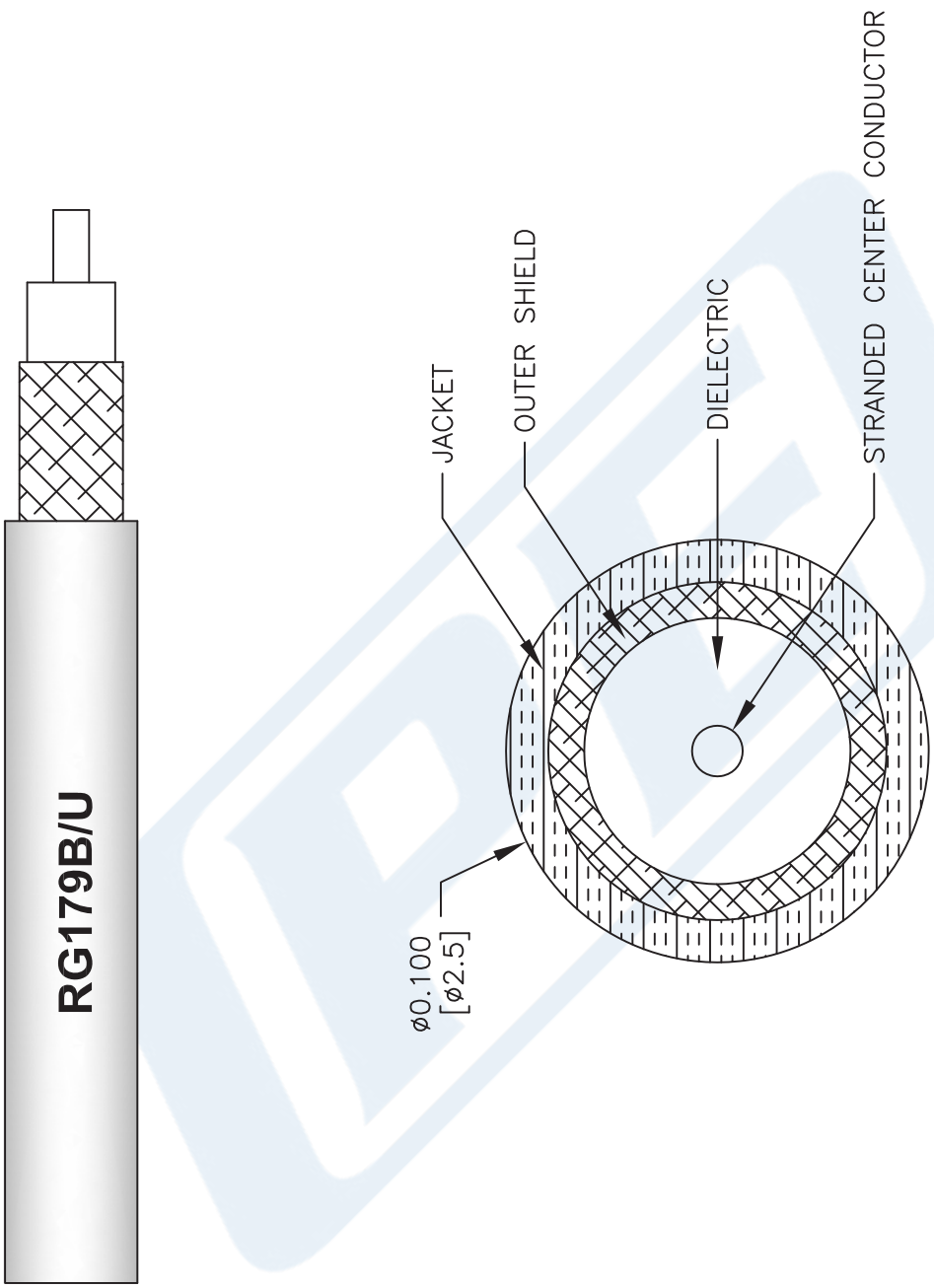


NOTES:
1. UNLESS OTHERWISE SPECIFIED ALL DIMENSIONS ARE NOMINAL.
2. ALL SPECIFICATIONS ARE SUBJECT TO CHANGE WITHOUT NOTICE AT ANY TIME.
3. DIMENSIONS ARE IN INCHES [mm].

DWG TITLE
RG179B/U

FSCM NO. 53919

CAD FILE 111716 | SCALE N/A | SIZE A | 41742

PASTERNACK®
THE ENGINEER'S RF SOURCE
Pasternack Enterprises, Inc.
P.O. Box 16759 | Irvine | CA | 92623
**Phone:** (949) 261-1920 | **Fax:** (949) 261-7451
**Website:** www.pasternack.com | **E-Mail:** sales@pasternack.com

© 2017 Pasternack Enterprises All Rights Reserved