PASTERNACK
an INFINITE brand

SMA Female to SMA Male Right Angle Low Loss Cable 36 Inch Length Using LMR-100 Coax

RF Cable Assemblies Technical Data Sheet PE3W10002-36

Configuration

- Connector 1: SMA Female
- Connector 2: SMA Male Right Angle
- Cable Type: LMR-100A

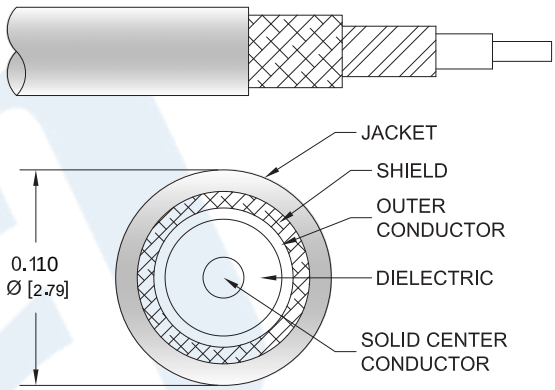

Features

- Max Frequency 5.8 GHz
- Shielding Effectivity > 90 dB
- 66% Phase Velocity
- Double Shielded
- PVC Jacket

Applications

- General Purpose
- Laboratory Use

Description

Pasternack's PE3W10002-36 SMA female to SMA male right angle 36 inch cable using LMR-100 coax is part of our full line of RF components available for same-day shipping. Pasternack's flexible RF cable assemblies are ideal for applications where tight bends and flexure are required. This Pasternack SMA to SMA cable assembly has a female to male gender configuration with 50 ohm flexible LMR-100A coax. The PE3W10002-36 SMA female to SMA male cable assembly operates to 5.8 GHz. The right angle SMA interface on the LMR-100A cable allows for easier connections in tight spaces. The double shielding of this Pasternack cable assembly provides excellent shielding effectiveness of better than 90 dB.

Custom versions of most RF cable assemblies can be built and shipped same day. Custom cable assembly lengths can be obtained by specifying the desired length on the web site at time of order or by contacting a sales representative. Other available RF cable assembly value added services include connector orientation or clocking, heat shrink booting and custom labeling. RF testing can also be performed to document the electrical performance of your cable assembly.

Click the following link (or enter part number in "SEARCH" on website) to obtain additional part information including price, inventory and certifications: SMA Female to SMA Male Right Angle Low Loss Cable 36 Inch Length Using LMR-100 Coax PE3W10002-36

Pasternack Enterprises, Inc. • P.O. Box 16759, Irvine, CA 92623
Phone: (866) 727-8376 or (949) 261-1920 • **Fax:** (949) 261-7451
Sales@Pasternack.com • Techsupport@Pasternack.com

© 2020 Pasternack Enterprises All Rights Reserved

PASTERNACK
an INFINITE brand

SMA Female to SMA Male Right Angle Low Loss Cable 36 Inch Length Using LMR-100 Coax

RF Cable Assemblies Technical Data Sheet PE3W10002-36

Electrical Specifications

Description	Minimum	Typical	Maximum	Units
Frequency Range	DC		5.8	GHz
VSWR			1.45:1	
Velocity of Propagation		66		%
RF Shielding	90			dB
Group Delay		1.54 [5.05]		ns/ft [ns/m]
Capacitance		30.8 [101.05]		pF/ft [pF/m]
Inductance		0.077 [0.25]		uH/ft [uH/m]
DC Resistance Inner Conductor		81 [265.75]		Ω/1000ft [Ω/Km]
DC Resistance Outer Conductor		9.5 [31.17]		Ω/1000ft [Ω/Km]
Jacket Spark			2,000	Vrms

Specifications by Frequency

Description	F1	F2	F3	F4	F5	Units
Frequency	0.25	0.5	1	2.5	5.8	GHz
Insertion Loss (Typ.)	0.66	0.81	1.02	1.5	2.22	dB

Electrical Specification Notes:
The Insertion Loss data above is based on the performance specifications of the coax cable and connectors used in this assembly. The Insertion Loss includes an estimated insertion loss of 0.1 dB for the straight connector and 0.2 dB for the right angle connector.

Mechanical Specifications

Cable Assembly

Length*	36 in [914.4 mm]
Diameter	0.689 in [17.5 mm]

Cable

Cable Type	LMR-100A
Impedance	50 Ohms
Inner Conductor Type	Solid
Inner Conductor Material and Plating	Copper Clad Steel
Dielectric Type	PE
Number of Shields	2
Shield Layer 1	Aluminum Tape
Shield Layer 2	Tinned Copper Braid

Click the following link (or enter part number in “SEARCH” on website) to obtain additional part information including price, inventory and certifications: SMA Female to SMA Male Right Angle Low Loss Cable 36 Inch Length Using LMR-100 Coax PE3W10002-36

Pasternack Enterprises, Inc. • P.O. Box 16759, Irvine, CA 92623
Phone: (866) 727-8376 or (949) 261-1920 • **Fax:** (949) 261-7451
Sales@Pasternack.com • Techsupport@Pasternack.com

© 2020 Pasternack Enterprises All Rights Reserved

SMA Female to SMA Male Right Angle Low Loss Cable 36 Inch Length Using LMR-100 Coax

Jacket Material	PVC, Black
Jacket Diameter	0.11 in [2.79 mm]
One Time Minimum Bend Radius	0.25 in [6.35 mm]
Repeated Minimum Bend Radius	1 in [25.4 mm]
Bending Moment	0.1 lbs-ft [0.14 N-m]
Flat Plate Crush	10 lbs/in [0.18 Kg/mm]
Tensile Strength	15 lbs [6.8 Kg]

Connectors

Description	Connector 1	Connector 2
Type	SMA Female	SMA Male Right Angle
Specification	MIL-STD-348A	
Impedance	50 Ohms	50 Ohms
Contact Material and Plating	Beryllium Copper, Gold	Brass, Gold
Contact Plating Specification	50µ in. minimum	
Dielectric Type	Teflon	Teflon
Outer Conductor Material and Plating	Brass, Gold	
Outer Conductor Plating Specification	3µ in. minimum	
Body Material and Plating	Brass, Gold	Brass, Gold
Body Plating Specification	3µ in. minimum	
Coupling Nut Material and Plating		Brass, Gold
Hex Size		5/16 in
Torque		5 in-lbs [0.57 Nm]

Compliance Certifications (see product page for current document)

Plotted and Other Data

Notes:

Click the following link (or enter part number in “SEARCH” on website) to obtain additional part information including price, inventory and certifications: SMA Female to SMA Male Right Angle Low Loss Cable 36 Inch Length Using LMR-100 Coax PE3W10002-36

Pasternack Enterprises, Inc. • P.O. Box 16759, Irvine, CA 92623
Phone: (866) 727-8376 or (949) 261-1920 • **Fax:** (949) 261-7451
Sales@Pasternack.com • Techsupport@Pasternack.com

© 2020 Pasternack Enterprises All Rights Reserved

SMA Female to SMA Male Right Angle Low Loss Cable 36 Inch Length Using LMR-100 Coax

How to Order

Part Number Configuration: **PE3W10002 - xx uu**

- uu: Unit of Measure:
  - cm = Centimeters
  - <blank> = Inches
- xx: Length
- PE3W10002: Base Number

Example: PE3W10002-12 = 12 inches long cable
PE3W10002-100cm = 100 cm long cable

SMA Female to SMA Male Right Angle Low Loss Cable 36 Inch Length Using LMR-100 Coax from Pasternack Enterprises has same day shipment for domestic and International orders. Our RF, microwave and millimeter wave products maintain a 99.4% availability and are part of the broadest selection in the industry.

Click the following link (or enter part number in “SEARCH” on website) to obtain additional part information including price, inventory and certifications: SMA Female to SMA Male Right Angle Low Loss Cable 36 Inch Length Using LMR-100 Coax PE3W10002-36

URL: https://www.pasternack.com/sma-female-sma-male-lmr100-cable-assembly-pe3w10002-36-p.aspx

The information contained in this document is accurate to the best of our knowledge and representative of the part described herein. It may be necessary to make modifications to the part and/or the documentation of the part, in order to implement improvements. Pasternack reserves the right to make such changes as required. Unless otherwise stated, all specifications are nominal. Pasternack does not make any representation or warranty regarding the suitability of the part described herein for any particular purpose, and Pasternack does not assume any liability arising out of the use of any part or documentation.

Pasternack Enterprises, Inc. • P.O. Box 16759, Irvine, CA 92623
Phone: (866) 727-8376 or (949) 261-1920 • **Fax:** (949) 261-7451
Sales@Pasternack.com • Techsupport@Pasternack.com

© 2020 Pasternack Enterprises All Rights Reserved

PE3W10002-36 CAD Drawing

SMA Female to SMA Male Right Angle Low Loss Cable
36 Inch Length Using LMR-100 Coax

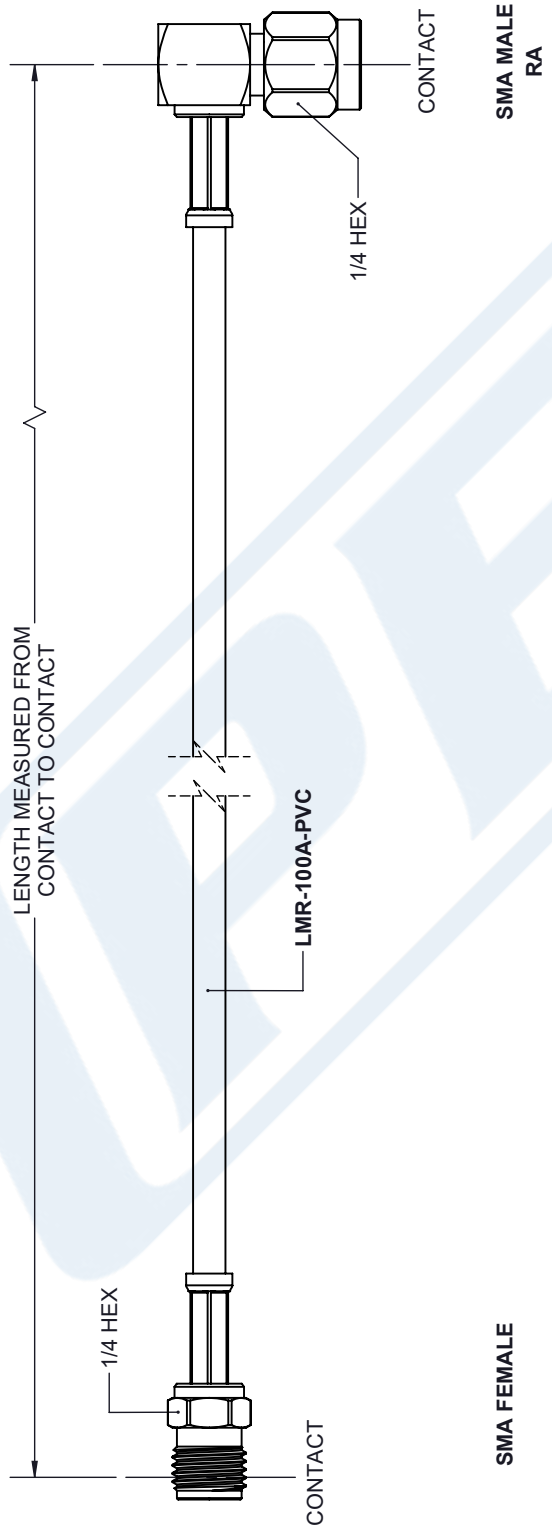

REVISIONS

REV.	DESCRIPTION	DATE	APPROVED
A	INITIAL RELEASE	10/15/2020	S.ELLIS

UNLESS OTHERWISE SPECIFIED
LEADING DIMENSIONS ARE INCHES
DIMENSIONS IN [ ] ARE MILLIMETERS

TOLERANCES:

.X = ± .2 [5.08] | FRACTIONS
.XX = ± .02 [.51] | ± 1/32
.XXX = ± .005 [.13] | ANGLES ± 1°

CABLE LENGTH (L) TOLERANCES:

L ≤ 12 [305] = +1 [25] / -0
12 [305] < L ≤ 60 [1524] = +2 [51] / -0
60 [1524] < L ≤ 120 [3048] = +4 [102] / -0
120 [3048] < L ≤ 300 [7620] = +6 [152] / -0
300 [7620] < L = +5%L / -0

ALL DIMENSIONS SHOWN
ARE FOR REFERENCE ONLY.

PASTERNACK®
an INFINITE brand
Pasternack Enterprises, Inc.
P.O.Box 16759, Irvine, CA 92623.
Phone: 1.949.261.1920 | 1.866.727.8376
Fax: 1.949.261.7451
Website: www.pasternack.com
E-mail: sales@pasternack.com

THIRD-ANGLE PROJECTION

THE INFORMATION AND DESIGN IN THIS DOCUMENT IS THE PROPERTY OF PASTERNACK CORPORATION ALL RIGHTS RESERVED.

SIZE	CAGE CODE	DRAWN BY	ITEM NO.	REV
A	53919	K.DANG	PE3W10002	A

SHEET 1 OF 1
SCALE N/A

THESE COMMODITIES, TECHNOLOGY OR SOFTWARE WERE EXPORTED FROM THE UNITED STATES IN ACCORDANCE WITH THE EXPORT ADMINISTRATION REGULATIONS. DIVERSION CONTRARY TO U.S. LAW PROHIBITED.

T-Rev.D