PASTERNACK®
THE ENGINEER'S RF SOURCE

1.0/2.3 Plug Connector Crimp/Solder Attachment for RG188-DS, RG316-DS

TECHNICAL DATA SHEET PE45166

Configuration

Connector	1.0/2.3 Plug
Connector Interface Type	RG188-DS, RG316-DS
Attachment Method (Shield/Contact)	Crimp/Solder
Body Style	Straight

Electrical Specifications

Frequency Range	DC to 4 GHz
Impedance	50 Ohms
Maximum VSWR	1.3:1
Maximum Operating Voltage	250 Volts

Mechanical Specifications

Temperature

Operating Range	-40 to +155 deg C

Size

Length	1.12 in [28.45 mm]
Width/Dia.	0.3 in [7.62 mm]
Weight	0.013 lbs [5.9 g]

Connector

Type	1.0/2.3 Plug
Contact Material and Plating	Brass, Gold
Contact Plating Specification	30µ in. minimum
Coupling Nut Material and Plating	Brass, Nickel
Coupling Nut Plating Specification	100µ in. minimum
Body Material and Plating	Brass, Nickel
Body Plating Specification	100µ in. minimum
Dielectric Type	Teflon

Compliance Certifications (visit www.Pasternack.com for current document)

RoHS Compliant	
REACH Compliant	06/18/2012

Click the following link (or enter part number in "SEARCH" on website) to obtain additional part information including price, inventory and certifications: 1.0/2.3 Plug Connector Crimp/Solder Attachment for RG188-DS, RG316-DS PE45166

Pasternack Enterprises, Inc. • P.O. Box 16759, Irvine, CA 92623
Phone: (866) 727-8376 or (949) 261-1920 • **Fax:** (949) 261-7451
Sales@Pasternack.com • Techsupport@Pasternack.com

© 2015 Pasternack Enterprises All Rights Reserved

1.0/2.3 Plug Connector Crimp/Solder Attachment for RG188-DS, RG316-DS

Plotted and Other Data

Notes:

- Values at +25 °C, sea level

1.0/2.3 Plug Connector Crimp/Solder Attachment for RG188-DS, RG316-DS from Pasternack Enterprises has same day shipment for domestic and International orders. Our RF, microwave and millimeter wave products maintain a 99% availability and are part of the broadest selection in the industry.

Click the following link (or enter part number in "SEARCH" on website) to obtain additional part information including price, inventory and certifications: 1.0/2.3 Plug Connector Crimp/Solder Attachment for RG188-DS, RG316-DS PE45166

URL: http://www.pasternack.com/1.0-2.3-plug-rg188-ds-rg316-ds-connector-pe45166-p.aspx

The information contained in this document is accurate to the best of our knowledge and representative of the part described herein. It may be necessary to make modifications to the part and/or the documentation of the part, in order to implement improvements. Pasternack reserves the right to make such changes as required. Unless otherwise stated, all specifications are nominal. Pasternack does not make any representation or warranty regarding the suitability of the part described herein for any particular purpose, and Pasternack does not assume any liability arising out of the use of any part or documentation.

Pasternack Enterprises, Inc. • P.O. Box 16759, Irvine, CA 92623
Phone: (866) 727-8376 or (949) 261-1920 • **Fax:** (949) 261-7451
Sales@Pasternack.com • Techsupport@Pasternack.com

© 2015 Pasternack Enterprises All Rights Reserved

PE45166 CAD Drawing

1.0/2.3 Plug Connector Crimp/Solder Attachment for RG188-DS, RG316-DS

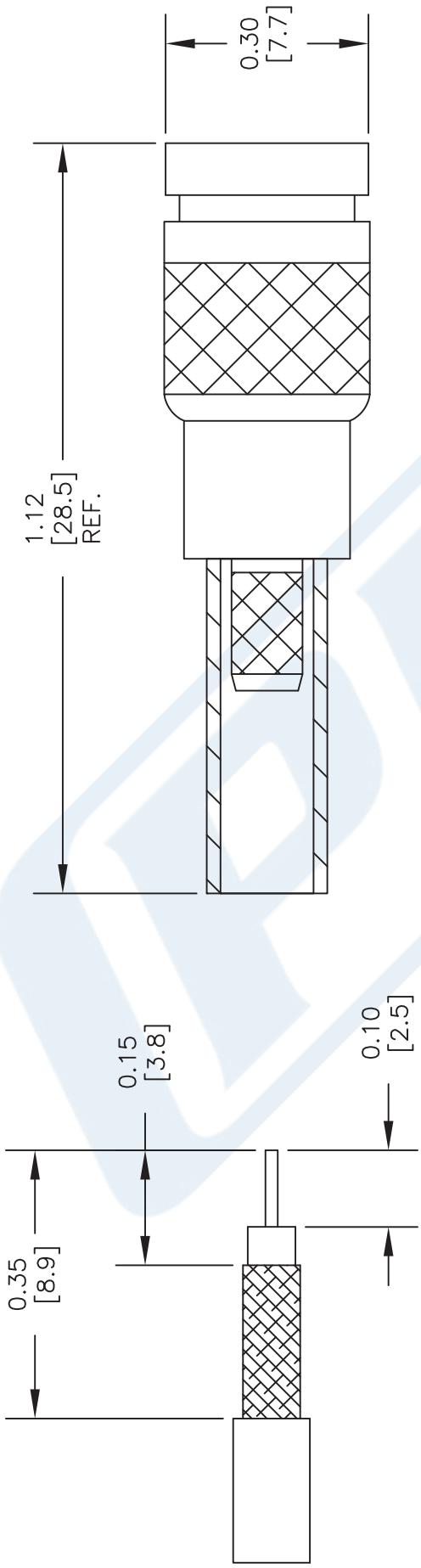

STRIPPING DIMENSIONS

CRIMP SIZE REQUIRED

CONTACT: SOLDER
FERRULE: .128" HEX CRIMP TOOL

NOTES:
1. UNLESS OTHERWISE SPECIFIED ALL DIMENSIONS ARE NOMINAL.
2. ALL SPECIFICATIONS ARE SUBJECT TO CHANGE WITHOUT NOTICE AT ANY TIME.
3. DIMENSIONS ARE IN INCHES [mm].
4. FITS MIL-C-17 AND EQUIVALENT CABLES.

DWG TITLE
PE45166

FSCM NO. 53919

CAD FILE 031815 | SCALE N/A | SIZE A | 2233

PASTERNACK®
THE ENGINEER'S RF SOURCE
Pasternack Enterprises, Inc.
P.O. Box 16759 | Irvine | CA | 92623
Phone: (949) 261-1920 | **Fax:** (949) 261-7451
Website: www.pasternack.com | **E-Mail:** sales@pasternack.com

© 2015 Pasternack Enterprises All Rights Reserved

PASTERNACK®
THE ENGINEER'S RF SOURCE

Banana Plug Connector Crimp/Solder Attachment for RG188-DS, RG316-DS

TECHNICAL DATA SHEET PE45164

Configuration

Connector	Banana Plug
Connector Interface Type	RG188-DS, RG316-DS
Attachment Method (Shield/Contact)	Crimp/Solder
Body Style	Straight

Electrical Specifications

Impedance	0 Ohms

Mechanical Specifications

Size

Length	2.54 in [64.52 mm]
Width/Dia.	1.175 in [29.85 mm]
Height	0.65 in [16.51 mm]
Weight	0.041 lbs [18.6 g]

Connector

Type	Banana Plug
Contact Material and Plating	Brass, Nickel
Body Material and Plating	Brass, Nickel
Dielectric Type	ABS

Compliance Certifications (visit www.Pasternack.com for current document)

Not RoHS Compliant

Plotted and Other Data

Notes:

- Values at +25 °C, sea level

Banana Plug Connector Crimp/Solder Attachment for RG188-DS, RG316-DS from Pasternack Enterprises has same day shipment for domestic and International orders. Our RF, microwave and millimeter wave products maintain a 99% availability and are part of the broadest selection in the industry.

Click the following link (or enter part number in "SEARCH" on website) to obtain additional part information including price, inventory and certifications: Banana Plug Connector Crimp/Solder Attachment for RG188-DS, RG316-DS PE45164

URL: http://www.pasternack.com/banana-plug-rg188-ds-rg316-ds-connector-pe45164-p.aspx

The information contained in this document is accurate to the best of our knowledge and representative of the part described herein. It may be necessary to make modifications to the part and/or the documentation of the part, in order to implement improvements. Pasternack reserves the right to make such changes as required. Unless otherwise stated, all specifications are nominal. Pasternack does not make any representation or warranty regarding the suitability of the part described herein for any particular purpose, and Pasternack does not assume any liability arising out of the use of any part or documentation.

Pasternack Enterprises, Inc. • P.O. Box 16759, Irvine, CA 92623
Phone: (866) 727-8376 or (949) 261-1920 • **Fax:** (949) 261-7451
Sales@Pasternack.com • Techsupport@Pasternack.com

© 2015 Pasternack Enterprises All Rights Reserved

PE45164 CAD Drawing

Banana Plug Connector Crimp/Solder Attachment for RG188-DS, RG316-DS

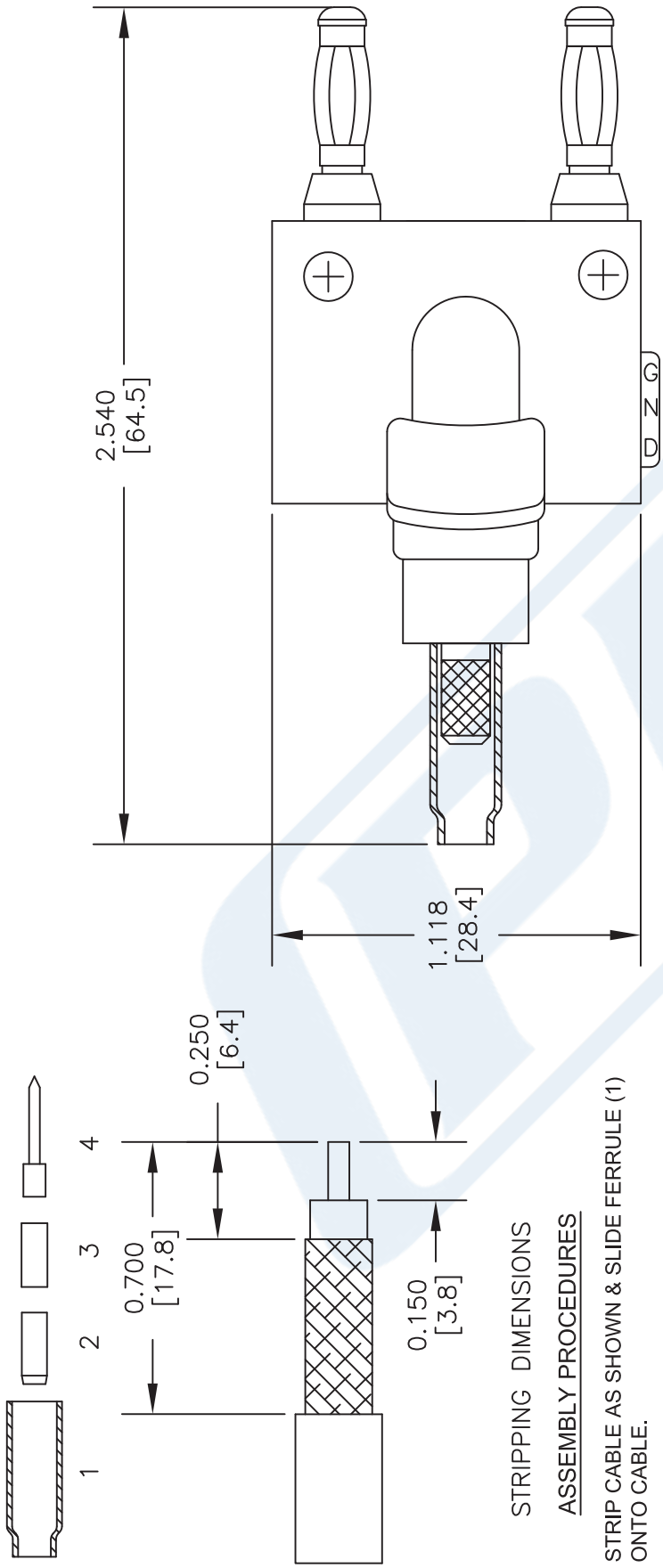

CRIMP SIZE REQUIRED

CONTACT: .068" HEX CRIMP TOOL
FERRULE: .178" HEX CRIMP TOOL

STRIPPING DIMENSIONS

ASSEMBLY PROCEDURES

1. STRIP CABLE AS SHOWN & SLIDE FERRULE (1) ONTO CABLE.
2. FLARE END OF CABLE BRAID & SLIDE METAL SPACER (2) & PTFE (3) SPACER OVER CABLE DIELECTRIC.
3. THE CONTACT (4) SHOULD BUTT AGAINST THE DIELECTRIC & PTFE SPACER. CRIMP CONTACT TO CABLE CENTER CONDUCTOR.
4. INSTALL CABLE ASSEMBLY INTO BODY SO THAT THE INNER FERRULE PORTION OF BODY SLIDES UNDER BRAID. PUSH CABLE ASSEMBLY FORWARD UNTIL CONTACT SITS IN PLACE. SLIDE FERRULE OVER BRAID AND UP AGAINST CONNECTOR BODY & CRIMP.

NOTES:
1. UNLESS OTHERWISE SPECIFIED ALL DIMENSIONS ARE NOMINAL.
2. ALL SPECIFICATIONS ARE SUBJECT TO CHANGE WITHOUT NOTICE AT ANY TIME.
3. DIMENSIONS ARE IN INCHES [mm].
4. FITS MIL-C-17 AND EQUIVALENT CABLES.

DWG TITLE
PE45164

FSCM NO. 53919

CAD FILE 031815 | SCALE N/A | SIZE A | 2233

PASTERNACK® THE ENGINEER'S RF SOURCE
Pasternack Enterprises, Inc.
P.O. Box 16759 | Irvine | CA | 92623
Phone: (949) 261-1920 | **Fax:** (949) 261-7451
Website: www.pasternack.com | **E-Mail:** sales@pasternack.com

© 2015 Pasternack Enterprises All Rights Reserved

PASTERNACK®
THE ENGINEER'S RF SOURCE

Flexible RG188 Coax Cable Double Shielded with White PTFE Jacket

Configuration

- Flexible Cable
- 2 Shield(s)

Electrical Specifications

Description	Minimum	Typical	Maximum	Units
Frequency Range	DC		10	GHz
Impedance		50		Ohms
Dielectric Withstanding Voltage (AC)			2,000	Vrms
Nominal Capacitance		32 [104.99]		pF/ft [pF/m]

Performance by Frequency Band

Description	F1	F2	F3	F4	F5	Units
Frequency	0.01	0.1	1	5	10	GHz
Attenuation, Typ	3.8	11.5	30	79	133	dB/100ft
	12.47	37.73	98.43	259.19	436.35	dB/100m
Input Power (CW), Max	1,250	450	160	57		Watts

Mechanical Specifications

Diameter	0.118 in [3 mm]
Weight	0.016 lbs/ft [0.02 Kg/m]

Construction Specifications

Description	Material and Plating	Diameter
Inner Conductor	Copper Clad Steel, Silver, 7 Strands	0.02 in [0.51 mm]
Conductor Type	Stranded	
Dielectric	PTFE	0.06 in [1.52 mm]
First Shield	Silver Plated Copper Braid 90% coverage	0.078 in [1.98 mm]

Click the following link (or enter part number in "SEARCH" on website) to obtain additional part information including price, inventory and certifications: Flexible RG188 Coax Cable Double Shielded with White PTFE Jacket RG188-DS

Pasternack Enterprises, Inc. • P.O. Box 16759, Irvine, CA 92623
Phone: (866) 727-8376 or (949) 261-1920 • **Fax:** (949) 261-7451
Sales@Pasternack.com • Techsupport@Pasternack.com

© 2017 Pasternack Enterprises All Rights Reserved

Second Shield	Silver Plated Copper Braid 90% coverage	0.096 in [2.44 mm]
Jacket	PTFE, White	0.118 in [3 mm]

Environmental Specifications

Temperature

Operating Range -55 to +200 deg C

Compliance Certifications (see product page for current document)

Plotted and Other Data

Notes:

Flexible RG188 Coax Cable Double Shielded with White PTFE Jacket from Pasternack Enterprises has same day shipment for domestic and International orders. Our RF, microwave and millimeter wave products maintain a 99.4% availability and are part of the broadest selection in the industry.

Click the following link (or enter part number in "SEARCH" on website) to obtain additional part information including price, inventory and certifications: Flexible RG188 Coax Cable Double Shielded with White PTFE Jacket RG188-DS

URL: https://www.pasternack.com/flexible-0.122-rg188-ds-50-ohm-coax-cable-ptfe-jacket-rg188-ds-p.aspx

The information contained in this document is accurate to the best of our knowledge and representative of the part described herein. It may be necessary to make modifications to the part and/or the documentation of the part, in order to implement improvements. Pasternack reserves the right to make such changes as required. Unless otherwise stated, all specifications are nominal. Pasternack does not make any representation or warranty regarding the suitability of the part described herein for any particular purpose, and Pasternack does not assume any liability arising out of the use of any part or documentation.

Pasternack Enterprises, Inc. • P.O. Box 16759, Irvine, CA 92623
Phone: (866) 727-8376 or (949) 261-1920 • **Fax:** (949) 261-7451
Sales@Pasternack.com • Techsupport@Pasternack.com

© 2017 Pasternack Enterprises All Rights Reserved

RG188-DS CAD Drawing

Flexible RG188 Coax Cable Double Shielded with White PTFE Jacket

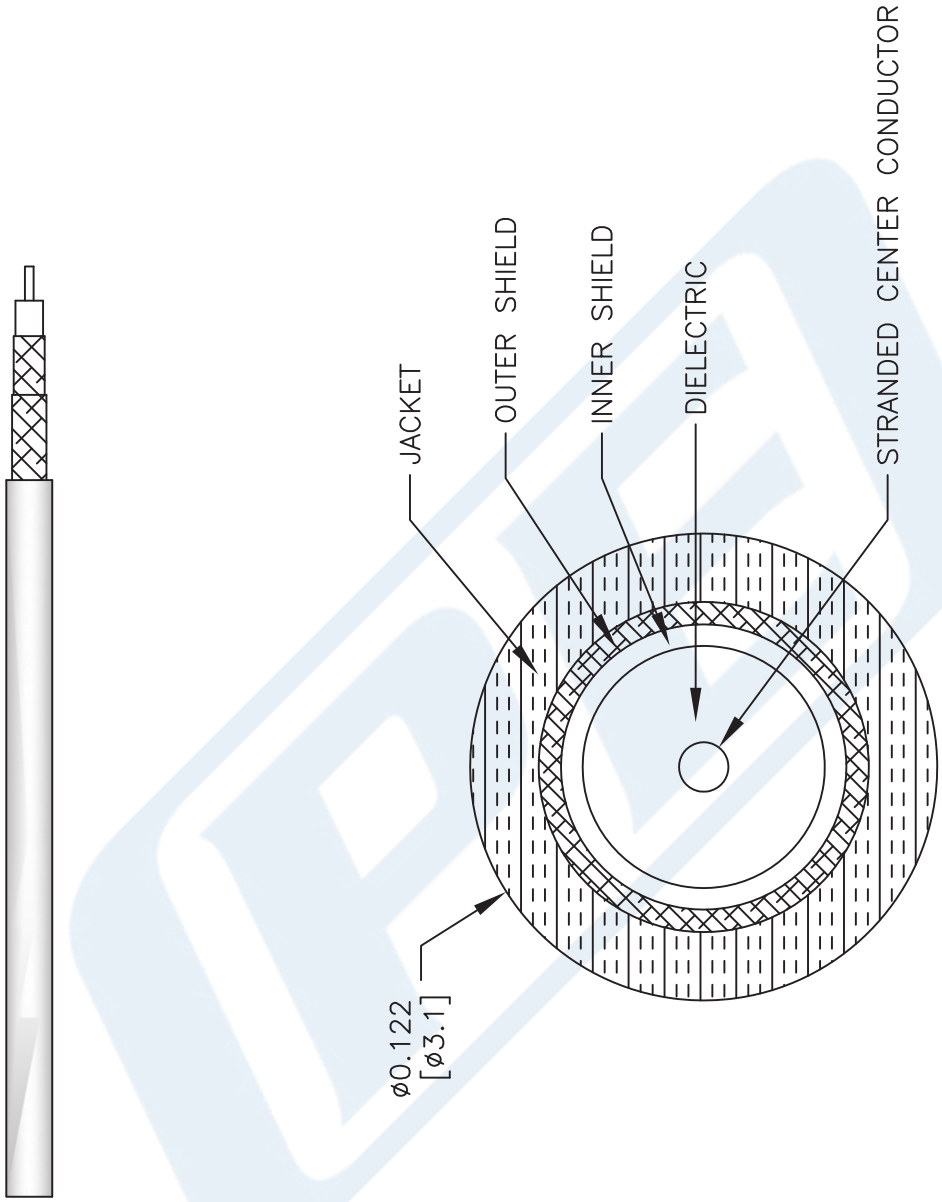

NOTES:
1. UNLESS OTHERWISE SPECIFIED ALL DIMENSIONS ARE NOMINAL.
2. ALL SPECIFICATIONS ARE SUBJECT TO CHANGE WITHOUT NOTICE AT ANY TIME.
3. DIMENSIONS ARE IN INCHES [mm].

DWG TITLE
RG188-DS

CAGE CODE 53919

CAD FILE 062817 | SCALE N/A | SIZE A | 2233

PASTERNACK®
THE ENGINEER'S RF SOURCE
Pasternack Enterprises, Inc.
P.O. Box 16759 | Irvine | CA | 92623
Phone: (949) 261-1920 | **Fax:** (949) 261-7451
Website: www.pasternack.com | **E-Mail:** sales@pasternack.com

© 2017 Pasternack Enterprises All Rights Reserved