NOTICE OF PROPRIETARY RIGHTS THIS DOCUMENT CONTAINS CONFIDENTIAL TECHNICAL DATA, INCLUDING TRADE SECRETS, PROPRIETARY TO TIMES MICROWAVE SYSTEMS. DISCLOSURE OF THIS DATA IS EXPRESSLY CONDITIONED UPON YOUR ASSENT THAT ITS USE IS LIMITED TO USE WITHIN YOUR COMPANY ONLY. ANY OTHER USE IS STRICTLY PROHIBITED WITHOUT THE PRIOR WRITTEN CONSENT OF TIMES MICROWAVE SYSTEMS.

SYM	REVISION DESCRIPTION	DFTM	DATE	APPD	DATE
A	RELEASED FOR PRODUCTION	N.N.N	9/4/13	J.D.B.	9/10/13

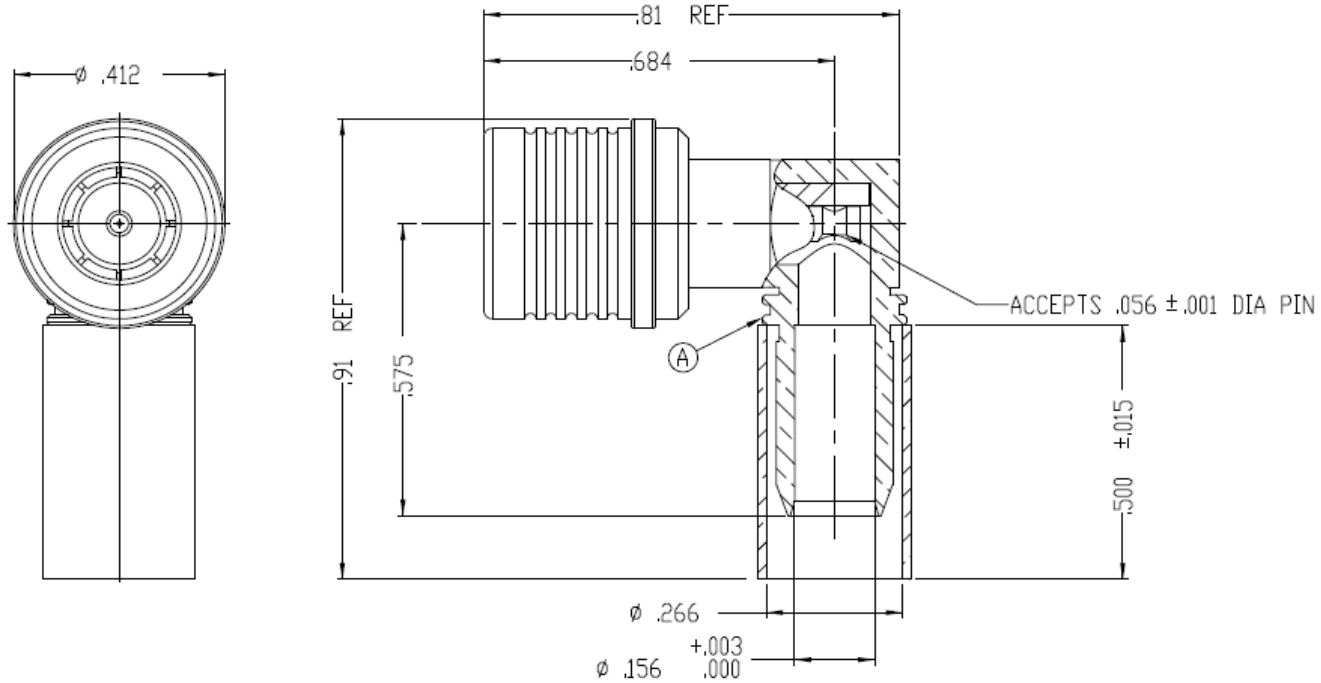

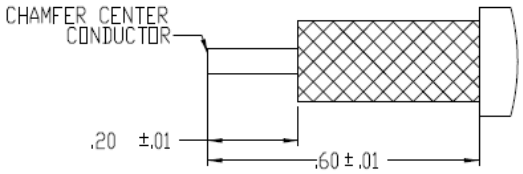

RECOMMENDED STRIP DIMENSIONS

NOTES:

1. ASSEMBLED CONNECTOR INTERFACE IS DESIGNED TO MATE WITH STANDARD QMA JACK.

2. MATERIAL:
   BODY, COUPLING SLEEVE - BRASS PER ASTM B16, C36000 ALLOY, TEMPER H02
   INSULATOR - TEFLON PER ASTM D1710, TYPE 1, GRADE 1, CLASS A
   SHRINK SLEEVE - HEAT SHRINKABLE ATUM PER MIL-I-23053/4 (NOT SHOWN)
   CRIMP SLEEVE - D.H.P. COPPER CDA, ALLOY #122, TEMPER HARD
   CONTACT - BERYLLIUM COPPER PER ASTM B196, C17300 ALLOY, CONDITION HT
   CONTACT FINGER - PHOSPHOR BRONZE PER ASTM B139, C54400 ALLOY, TEMPER HD

3. FINISH:
   CONTACT & FINGER - GOLD PLATE PER ASTM B488
   CRIMP SLEEVE - SULFAMATE NICKEL PER MIL-P-27418
   ALL OTHER METAL PARTS - ALBALOY PLATE PER DELTA SPEC. 111197

MATL:	UNLESS OTHERWISE SPECIFIED	DFTM. N. N. N	TIMES MICROWAVE SYSTEMS
USED ON: B	ALL DIMENSIONS ARE IN INCHES MACHINED SURFACES FINISH 63 RMS MAX. REMOVE ALL BURRS .004 MAX. BREAK MACHINE CORNERS .005 MAX. FILLET R. TOLERANCES ON DECIMALS .XX ±.01 .XXX ±.005 ANGLES ± 1° FRACTIONS ± 1/64	DATE 9/4/13 CHKD. J. D. B. DATE 9/10/13 APPD. J. D. B.	EZ-240-QM-RA-X CONNECTOR ASSEMBLY 90° QMAM for LMR-240
SCALE: NONE / DWG. SIZE A	DO NOT SCALE DRAWING / CODE IDENT 68999	DATE 9/10/13	SHT. 1 of 1 / SD3190-2895 / REV. A

PASTERNACK®
www.pasternack.com

TNC Male Right Angle Connector Crimp/Solder Attachment For RG8X, PE-C240, 0.240 inch

TECHNICAL DATA SHEET PE44635

TNC Male Right Angle Connector Crimp/Solder Attachment For RG8X, PE-C240, 0.240 inch

Configuration

Connector	TNC Male
Connector Interface Type	RG8X,PE-C240,0.240 inch
Cable Attachment Method (Shield/Contact)	Crimp/Solder
Body Style	Right Angle

Electrical Specifications

Impedance, Ohms	50

Mechanical Specifications

Size

Length, in [mm]	1.103 [28.02]
Width/Dia., in [mm]	0.59 [15]
Height, in [mm]	1.06 [26.92]
Weight, lbs [g]	0.042 [19.05]

Connector

Type	TNC Male
Contact Material and Plating	Brass, Gold
Coupling Nut Material and Plating	Brass, Nickel
Body Material and Plating	Brass, Nickel
Dielectric Type	Teflon

Compliance Certifications (visit www.Pasternack.com for current document)

RoHS Compliant	Yes

Plotted and Other Data

Notes:	Values at 25 °C, sea level

URL: http://www.pasternack.com/tnc-male-standard-rg8x-pe-c240-0.240-connector-pe44635-p.aspx

TNC Male Right Angle Connector Crimp/Solder Attachment For RG8X, PE-C240, 0.240 inch from Pasternack Enterprises has same day shipment for domestic and International orders. We maintain 99% availability of the industry's broadest selection of RF, microwave and fiber optic products.

The information contained in this document is accurate to the best of our knowledge and representative of the part described herein. It may be necessary to make modifications to the part and/or the documentation of the part, in order to implement improvements. Pasternack reserves the right to make such changes as required. Unless otherwise stated, all specifications are nominal.

Pasternack Enterprises, Inc. • P.O. Box 16759, Irvine, CA 92623
Phone: (866) 727-8376 or (949) 261-1920 • **Fax:** (949) 261-7451
Sales@Pasternack.com • Techsupport@Pasternack.com

© 2013 Pasternack Enterprises All Rights Reserved

PE44635 CAD Drawing

TNC Male Right Angle Connector Crimp/Solder
Attachment For RG8X, PE-C240, 0.240 inch

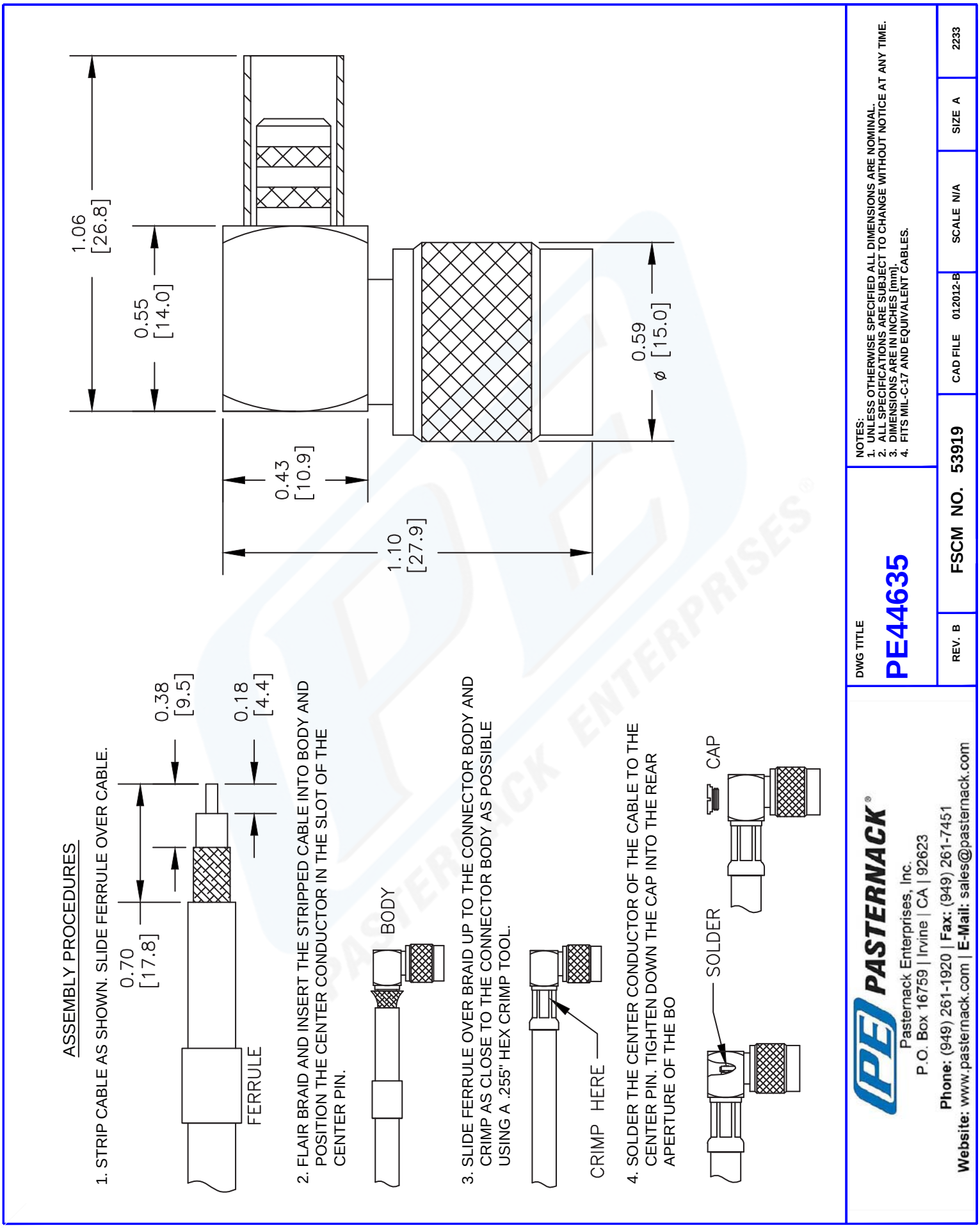

© 2012 Pasternack Enterprises All Rights Reserved

PASTERNACK®
www.pasternack.com

Low Loss Flexible RG8X Type Coax Cable Double Shielded with Black PE Jacket

TECHNICAL DATA SHEET PE-C240

Low Loss Flexible RG8X Type Coax Cable Double Shielded with Black PE Jacket

Configuration

Cable Design	Low Loss
Inner Conductor Material and Plating	Copper
Dielectric Type	PE (F)
Shield Materials	Aluminum Tape, Tinned Copper Braid
Jacket Material and Color	PE, Black

Electrical Specifications

Impedance, Ohms	50
Velocity of Propagation, %	84
Maximum Operating Frequency, GHz	5.8
RF Shielding, dB	90
Capacitance, pF/ft [pF/m]	24.2 [79.4]

Electrical Specifications by Frequency

Frequency 1

Frequency, MHz	150
Attenuation, dB/100ft [dB/100m]	3.4 [11.15]
Power Handling, Watts	660

Frequency 2

Frequency, MHz	450
Attenuation, dB/100ft [dB/100m]	5.95 [19.52]
Power Handling, Watts	380

Frequency 3

Frequency, MHz	900
Attenuation, dB/100ft [dB/100m]	8.58 [28.15]
Power Handling, Watts	260

Frequency 4

Frequency, GHz	1.5
Attenuation, dB/100ft [dB/100m]	11.18 [36.68]
Power Handling, Watts	200

Frequency 5

Frequency, GHz	2
Attenuation, dB/100ft [dB/100m]	13 [42.65]
Power Handling, Watts	170

Click the following link (or enter part number in “SEARCH” on website) to obtain additional part information including price, inventory and certifications: Low Loss Flexible RG8X Type Coax Cable Double Shielded with Black PE Jacket PE-C240

The information contained in this document is accurate to the best of our knowledge and representative of the part described herein. It may be necessary to make modifications to the part and/or the documentation of the part, in order to implement improvements. Pasternack reserves the right to make such changes as required. Unless otherwise stated, all specifications are nominal.

Pasternack Enterprises, Inc. • P.O. Box 16759, Irvine, CA 92623
Phone: (866) 727-8376 or (949) 261-1920 • **Fax:** (949) 261-7451
Sales@Pasternack.com • Techsupport@Pasternack.com

© 2013 Pasternack Enterprises All Rights Reserved

Low Loss Flexible RG8X Type Coax Cable Double Shielded with Black PE Jacket

Frequency 6

Frequency, GHz	2.5
Attenuation, dB/100ft [dB/100m]	14.55 [47.74]
Power Handling, Watts	150

Frequency 7

Frequency, GHz	5.8
Attenuation, dB/100ft [dB/100m]	23 [75.46]
Power Handling, Watts	100

Mechanical Specifications

Temperature

Operating Range, deg C	-40 to +85
Storage Range, deg C	-40 to +85

Inner Conductor

Number of Strands	1
Material	Copper
Diameter, in [mm]	0.057 [1.45]

Dielectric:

Type	PE (F)
Diameter, in [mm]	0.15 [3.81]

Shield:

Number of	2
Material 1	Aluminum Tape
Material 2	Tinned Copper Braid
Diameter, in [mm]	0.178 [4.52]

Jacket:

Material	PE
Diameter, in [mm]	0.24 [6.1]
Color	Black
One Time Minimum Bend Radius, in [mm]	0.752 [19.1]
Repeated Minimum Bend Radius, in [mm]	2.5 [63.5]
Weight, lbs/ft [Kg/m]	0.033 [0.05]

Compliance Certifications (visit www.Pasternack.com for current document)

RoHS Compliant	Yes

Click the following link (or enter part number in “SEARCH” on website) to obtain additional part information including price, inventory and certifications: Low Loss Flexible RG8X Type Coax Cable Double Shielded with Black PE Jacket PE-C240

The information contained in this document is accurate to the best of our knowledge and representative of the part described herein. It may be necessary to make modifications to the part and/or the documentation of the part, in order to implement improvements. Pasternack reserves the right to make such changes as required. Unless otherwise stated, all specifications are nominal.

Pasternack Enterprises, Inc. • P.O. Box 16759, Irvine, CA 92623
Phone: (866) 727-8376 or (949) 261-1920 • **Fax:** (949) 261-7451
Sales@Pasternack.com • Techsupport@Pasternack.com

© 2013 Pasternack Enterprises All Rights Reserved

Low Loss Flexible RG8X Type Coax Cable Double Shielded with Black PE Jacket

Plotted and Other Data

Notes: Values at 25 °C, sea level

Low Loss Flexible RG8X Type Coax Cable Double Shielded with Black PE Jacket from Pasternack Enterprises has same day shipment for domestic and International orders. Our RF, microwave and fiber optic products maintain a 99% availability and are part of the broadest selection in the industry.

Click the following link (or enter part number in “SEARCH” on website) to obtain additional part information including price, inventory and certifications: Low Loss Flexible RG8X Type Coax Cable Double Shielded with Black PE Jacket PE-C240

URL: http://www.pasternack.com/flexible-0.240-50-ohm-coax-cable-pe-jacket-pe-c240-p.aspx

The information contained in this document is accurate to the best of our knowledge and representative of the part described herein. It may be necessary to make modifications to the part and/or the documentation of the part, in order to implement improvements. Pasternack reserves the right to make such changes as required. Unless otherwise stated, all specifications are nominal.

Pasternack Enterprises, Inc. • P.O. Box 16759, Irvine, CA 92623
Phone: (866) 727-8376 or (949) 261-1920 • **Fax:** (949) 261-7451
Sales@Pasternack.com • Techsupport@Pasternack.com

© 2013 Pasternack Enterprises All Rights Reserved

PE-C240 CAD Drawing

Low Loss Flexible RG8X Type Coax Cable Double Shielded with Black PE Jacket

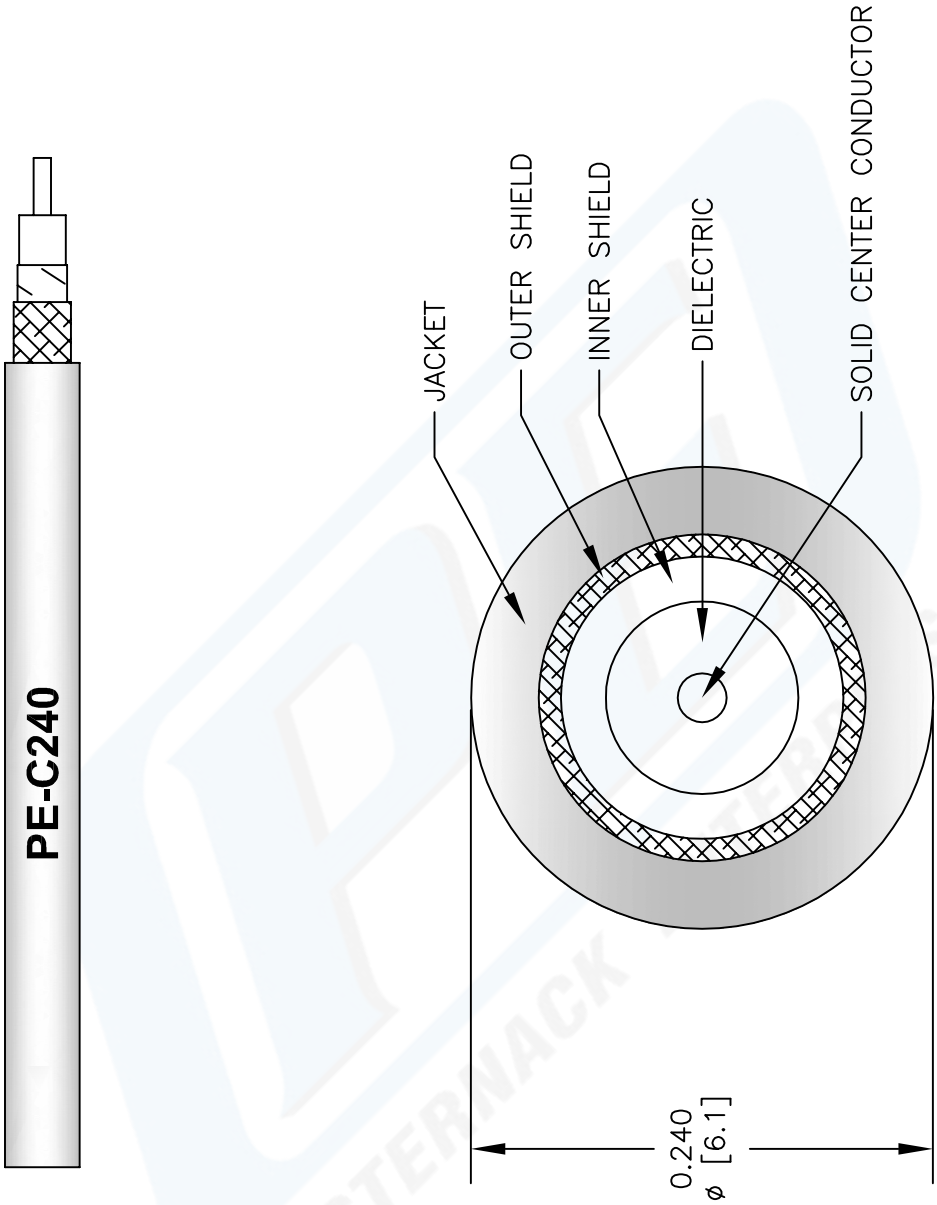

NOTES:
1. UNLESS OTHERWISE SPECIFIED ALL DIMENSIONS ARE NOMINAL.
2. ALL SPECIFICATIONS ARE SUBJECT TO CHANGE WITHOUT NOTICE AT ANY TIME.
3. DIMENSIONS ARE IN INCHES [mm].

DWG TITLE PE-C240

REV. B | FSCM NO. 53919 | CAD FILE 050709 | SCALE N/A | SIZE A | 147

PASTERNACK®
Pasternack Enterprises, Inc.
P.O. Box 16759 | Irvine | CA | 92623
Phone: (949) 261-1920 | **Fax:** (949) 261-7451
Website: www.pasternack.com | **E-Mail:** sales@pasternack.com

© 2013 Pasternack Enterprises All Rights Reserved