PASTERNACK®
www.pasternack.com

# QMA Female Bulkhead Connector Crimp/Solder Attachment For RG58, RG141, .268 inch D Hole

TECHNICAL DATA SHEET PE44509

**QMA Female Bulkhead Connector Crimp/Solder Attachment For RG58, RG141, .268 inch D Hole**

## Configuration

| | |
|---|---|
| Connector | QMA Female |
| Connector Interface Type | RG58,RG141 |
| Cable Attachment Method (Shield/Contact) | Crimp/Solder |
| Body Style | Straight |
| Mount Method | Bulkhead |

## Electrical Specifications

| | |
|---|---|
| Impedance, Ohms | 50 |

## Mechanical Specifications

**Size**

| | |
|---|---|
| Length, in [mm] | 1.2 [30.48] |
| Width/Dia., in [mm] | 0.433 [11.00] |
| Weight, lbs [g] | 0.006 [2.72] |

**Connector**

| | |
|---|---|
| Type | QMA Female |
| Contact Material and Plating | Gold |
| Body Material and Plating | Brass, Tri-Metal |
| Dielectric Type | PTFE |

## Compliance Certifications (visit www.Pasternack.com for current document)

| | |
|---|---|
| RoHS Compliant | Yes |

## Plotted and Other Data

| | |
|---|---|
| Notes: | Values at 25 °C, sea level |

QMA Female Bulkhead Connector Crimp/Solder Attachment For RG58, RG141, .268 inch D Hole from Pasternack Enterprises has same day shipment for domestic and International orders. Our RF, microwave and fiber optic products maintain a 99% availability and are part of the broadest selection in the industry.

Click the following link (or enter part number in “SEARCH” on website) to obtain additional part information including price, inventory and certifications: QMA Female Bulkhead Connector Crimp/Solder Attachment For RG58, RG141, .268 inch D Hole PE44509

URL: http://www.pasternack.com/qma-female-standard-rg58-rg141-connector-pe44509-p.aspx

The information contained in this document is accurate to the best of our knowledge and representative of the part described herein. It may be necessary to make modifications to the part and/or the documentation of the part, in order to implement improvements. Pasternack reserves the right to make such changes as required. Unless otherwise stated, all specifications are nominal.

Pasternack Enterprises, Inc. • P.O. Box 16759, Irvine, CA 92623
**Phone:** (866) 727-8376 or (949) 261-1920 • **Fax:** (949) 261-7451
Sales@Pasternack.com • Techsupport@Pasternack.com

© 2013 Pasternack Enterprises All Rights Reserved

# PE44509 CAD Drawing

QMA Female Bulkhead Connector Crimp/Solder Attachment
For RG58, RG141, .268 inch D Hole

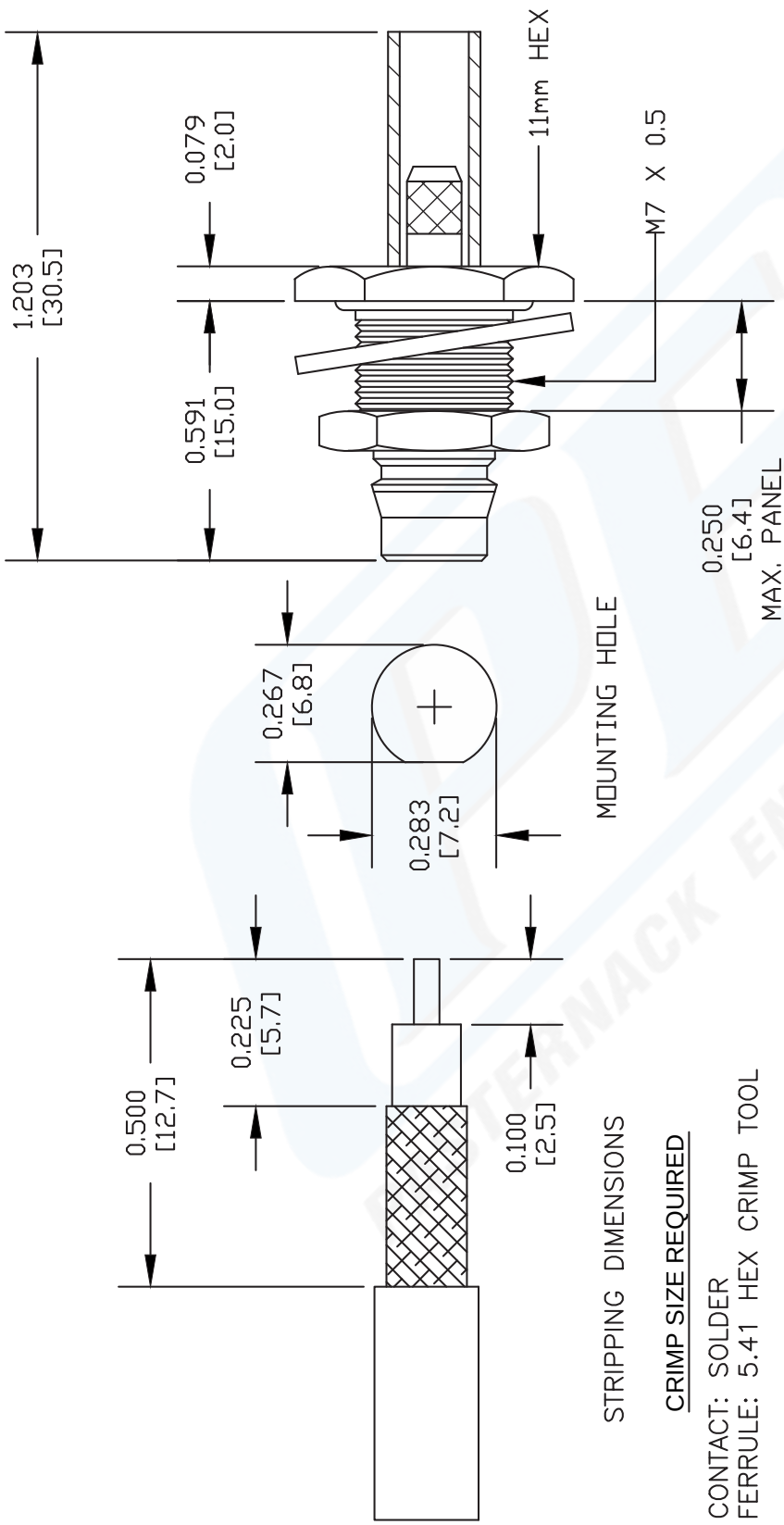


NOTES:
1. UNLESS OTHERWISE SPECIFIED ALL DIMENSIONS ARE NOMINAL.
2. ALL SPECIFICATIONS ARE SUBJECT TO CHANGE WITHOUT NOTICE AT ANY TIME.
3. DIMENSIONS ARE IN INCHES [mm].
4. FITS MIL-C-17 AND EQUIVALENT CABLES.

DWG TITLE **PE44509**

FSCM NO. 53919

CAD FILE 012407 | SCALE N/A | SIZE A | 127

PASTERNACK®
Pasternack Enterprises, Inc.
P.O. Box 16759 | Irvine | CA | 92623
**Phone:** (949) 261-1920 | **Fax:** (949) 261-7451
**Website:** www.pasternack.com | **E-Mail:** sales@pasternack.com

© 2013 Pasternack Enterprises All Rights Reserved

PASTERNACK®
THE ENGINEER'S RF SOURCE

# TNC Male Connector Crimp/Solder Attachment for RG58, RG303, RG141, PE-C195, PE-P195, LMR-195, 0.195 inch



## Configuration

- TNC Male Connector
- 50 Ohms
- Straight Body Geometry
- RG58, RG303, RG141, PE-C195, PE-P195, LMR-195, 0.195 inch Interface Type
- Crimp/Solder Attachment

## Features

- Max. Operating Frequency 6 GHz
- Good VSWR of 1.5:1
- Gold Plated Brass Contact
- 30 µin minimum contact plating

## Applications

- General Purpose Test
- Custom Cable Assemblies

### Description

Pasternack's PE4156 TNC male connector with crimp/solder attachment for RG58, RG303, RG141, PE-C195, PE-P195, LMR-195 and 0.195 inch is part of our full line of RF components available for same-day shipping. Our TNC male connector operates up to a maximum frequency of 6 GHz and offers good VSWR of 1.5:1.

Our TNC male connector PE4156 datasheet specifications and drawing with dimensions are shown below in this PDF. Pasternack's broad catalog of RF, microwave and millimeter wave connectors allows designers to configure and customize their signal connections however they like. Whether the need is to provide an I/O for a board design, or simply create a custom cable assembly configuration, Pasternack has the right connector for the job. Pasternack can also expertly build your custom cable assemblies for you and ship same-day.

### Electrical Specifications

| Description | Minimum | Typical | Maximum | Units |
|---|---|---|---|---|
| Frequency Range | DC | | 6 | GHz |
| VSWR | | | 1.5:1 | |
| Operating Voltage (AC) | | | 500 | Vrms |

### Mechanical Specifications

| | |
|---|---|
| **Size** | |
| Length | 1.098 in [27.89 mm] |
| Width/Dia. | 0.591 in [15.01 mm] |
| Weight | 0.033 lbs [14.97 g] |

Click the following link (or enter part number in "SEARCH" on website) to obtain additional part information including price, inventory and certifications: TNC Male Connector Crimp/Solder Attachment for RG58, RG303, RG141, PE-C195, PE-P195, LMR-195, 0.195 inch PE4156

Pasternack Enterprises, Inc. • P.O. Box 16759, Irvine, CA 92623
**Phone:** (866) 727-8376 or (949) 261-1920 • **Fax:** (949) 261-7451
Sales@Pasternack.com • Techsupport@Pasternack.com

© 2016 Pasternack Enterprises All Rights Reserved

# TNC Male Connector Crimp/Solder Attachment for RG58, RG303, RG141, PE-C195, PE-P195, LMR-195, 0.195 inch



**Material Specifications**

| Description | Material | Plating |
|---|---|---|
| Contact | Brass | Gold<br>30 µin minimum |
| Insulation | PTFE | |
| Body | Brass | Nickel<br>100 µin minimum |
| Coupling Nut | Brass | Nickel<br>100 µin minimum |
| Crimp Sleeve | Brass | Nickel |

## Environmental Specifications

**Temperature**

Operating Range -65 to +165 deg C

## Compliance Certifications (see product page for current document)

## Plotted and Other Data

Notes:

TNC Male Connector Crimp/Solder Attachment for RG58, RG303, RG141, PE-C195, PE-P195, LMR-195, 0.195 inch from Pasternack Enterprises has same day shipment for domestic and International orders. Our RF, microwave and millimeter wave products maintain a 99% availability and are part of the broadest selection in the industry.

Click the following link (or enter part number in "SEARCH" on website) to obtain additional part information including price, inventory and certifications: TNC Male Connector Crimp/Solder Attachment for RG58, RG303, RG141, PE-C195, PE-P195, LMR-195, 0.195 inch PE4156

URL: https://www.pasternack.com/tnc-male-standard-rg58-connector-pe4156-p.aspx

The information contained in this document is accurate to the best of our knowledge and representative of the part described herein. It may be necessary to make modifications to the part and/or the documentation of the part, in order to implement improvements. Pasternack reserves the right to make such changes as required. Unless otherwise stated, all specifications are nominal. Pasternack does not make any representation or warranty regarding the suitability of the part described herein for any particular purpose, and Pasternack does not assume any liability arising out of the use of any part or documentation.

Pasternack Enterprises, Inc. • P.O. Box 16759, Irvine, CA 92623
**Phone:** (866) 727-8376 or (949) 261-1920 • **Fax:** (949) 261-7451
Sales@Pasternack.com • Techsupport@Pasternack.com

© 2016 Pasternack Enterprises All Rights Reserved

# PE4156 CAD Drawing

TNC Male Connector Crimp/Solder Attachment for RG58, RG303, RG141, PE-C195, PE-P195, LMR-195, 0.195 inch

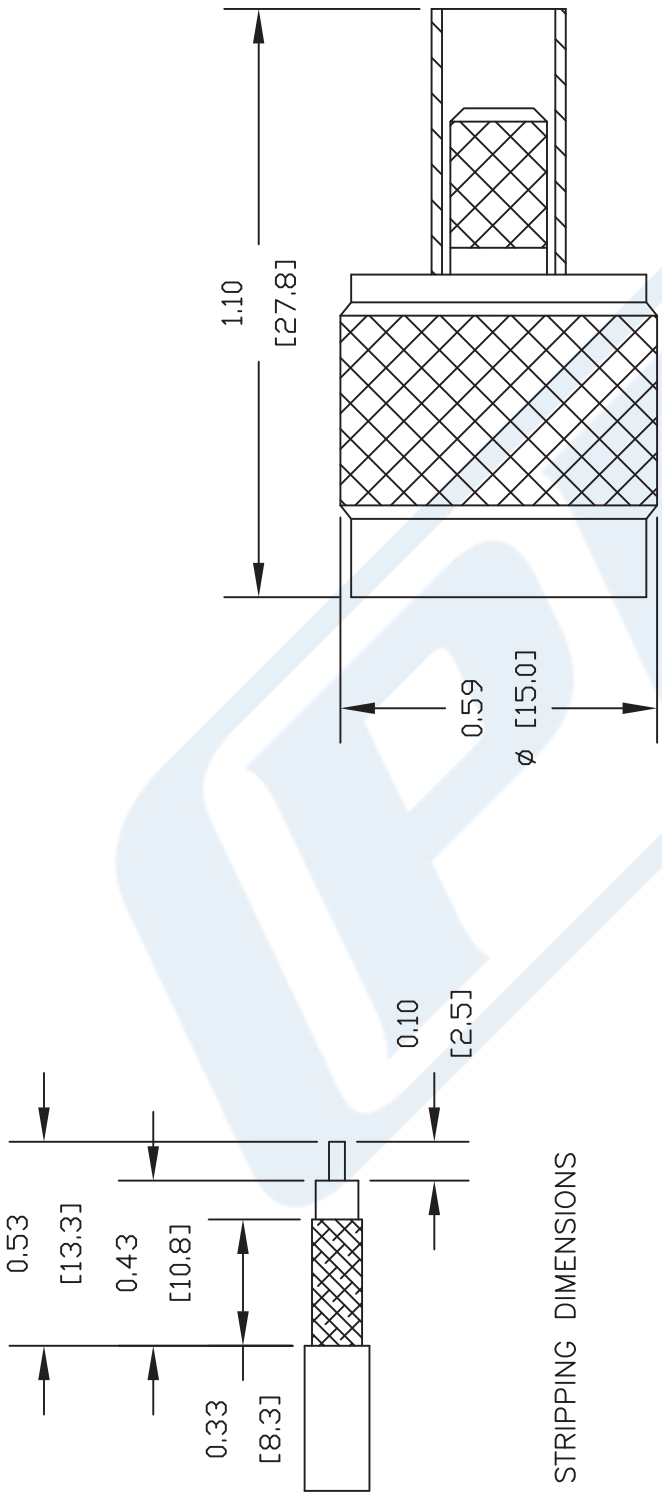


STRIPPING DIMENSIONS

CRIMP SIZES REQUIRED

CONTACT: .068" HEX CRIMP TOOL
FERRULE: .213" HEX CRIMP TOOL

NOTES:
1. UNLESS OTHERWISE SPECIFIED ALL DIMENSIONS ARE NOMINAL.
2. ALL SPECIFICATIONS ARE SUBJECT TO CHANGE WITHOUT NOTICE AT ANY TIME.
3. DIMENSIONS ARE IN INCHES [mm].
4. FITS MIL-C-17 AND EQUIVALENT CABLES.

DWG TITLE **PE4156**

| REV. - | FSCM NO. 53919 | CAD FILE 042309 | SCALE N/A | SIZE A | 147 |
|---|---|---|---|---|---|


PASTERNACK®
Pasternack Enterprises, Inc.
P.O. Box 16759 | Irvine | CA | 92623
**Phone:** (949) 261-1920 | **Fax:** (949) 261-7451
**Website:** www.pasternack.com | **E-Mail:** sales@pasternack.com


© 2016 Pasternack Enterprises All Rights Reserved

PASTERNACK®
THE ENGINEER'S RF SOURCE

# Low Loss Flexible PE-P195 Coax Cable Triple Shielded with Tan FEP Jacket

RF Cables
Technical Data Sheet

PE-P195

## Configuration

- Low Loss Flexible Cable
- 3 Shield(s)

### Electrical Specifications

| Description | Minimum | Typical | Maximum | Units |
|---|---|---|---|---|
| Frequency Range | DC | | 22 | GHz |
| Impedance | | 50 | | Ohms |
| Velocity of Propagation | | 70 | | % |
| Operating Voltage (AC) | | | 1,900 | Vrms |
| Dielectric Withstanding Voltage (AC) | | | 5,000 | Vrms |
| Nominal Capacitance | | 29 [95.14] | | pF/ft [pF/m] |

### Performance by Frequency Band

| Description | F1 | F2 | F3 | F4 | F5 | Units |
|---|---|---|---|---|---|---|
| Frequency | 0.1 | 0.5 | 1 | 5 | 10 | GHz |
| Attenuation, Typ | 3.9 | 8.8 | 12.5 | 31.5 | 45 | dB/100ft |
| | 12.8 | 28.87 | 41.01 | 103.35 | 147.64 | dB/100m |

| Description | F6 | F7 | F8 | F9 | F10 | Units |
|---|---|---|---|---|---|---|
| Frequency | 15 | 18 | 20 | 22 | | GHz |
| Attenuation, Typ | 58 | 65 | 69 | 73 | | dB/100ft |
| | 190.29 | 213.25 | 226.38 | 239.5 | | dB/100m |

### Mechanical Specifications

| | |
|---|---|
| Diameter | 0.195 in [4.95 mm] |
| Weight | 0.038 lbs/ft [0.06 Kg/m] |
| Min. Bend Radius (Repeated) | 1 in [25.4 mm] |

Click the following link (or enter part number in "SEARCH" on website) to obtain additional part information including price, inventory and certifications: Low Loss Flexible PE-P195 Coax Cable Triple Shielded with Tan FEP Jacket PE-P195

Pasternack Enterprises, Inc. • P.O. Box 16759, Irvine, CA 92623
**Phone:** (866) 727-8376 or (949) 261-1920 • **Fax:** (949) 261-7451
Sales@Pasternack.com • Techsupport@Pasternack.com

© 2018 Pasternack Enterprises All Rights Reserved

# Low Loss Flexible PE-P195 Coax Cable Triple Shielded with Tan FEP Jacket



**Construction Specifications**

| Description | Material and Plating | Diameter |
|---|---|---|
| Inner Conductor | Copper Clad Steel, Silver, 1 Strands | 0.037 in [0.94 mm] |
| Conductor Type | Solid | |
| Dielectric | PTFE | 0.116 in [2.95 mm] |
| First Shield | Silver Plated Copper Braid<br>96% coverage | 0.126 in [3.2 mm] |
| Second Shield | Aluminum Tape | 0.132 in [3.35 mm] |
| Third Shield | Silver Plated Copper Braid<br>96% coverage | 0.155 in [3.94 mm] |
| Jacket | FEP, Tan | 0.195 in [4.95 mm] |

## Environmental Specifications

**Temperature**

Operating Range -55 to +200 deg C

## Compliance Certifications (see product page for current document)

## Plotted and Other Data

Notes:

Low Loss Flexible PE-P195 Coax Cable Triple Shielded with Tan FEP Jacket from Pasternack Enterprises has same day shipment for domestic and International orders. Our RF, microwave and millimeter wave products maintain a 99.4% availability and are part of the broadest selection in the industry.

Click the following link (or enter part number in "SEARCH" on website) to obtain additional part information including price, inventory and certifications: Low Loss Flexible PE-P195 Coax Cable Triple Shielded with Tan FEP Jacket PE-P195

URL: https://www.pasternack.com/precision-0.195-rg142-solid-center-conductor-52-ohm-coax-cable-fep-jacket-pe-p195-p.aspx

The information contained in this document is accurate to the best of our knowledge and representative of the part described herein. It may be necessary to make modifications to the part and/or the documentation of the part, in order to implement improvements. Pasternack reserves the right to make such changes as required. Unless otherwise stated, all specifications are nominal. Pasternack does not make any representation or warranty regarding the suitability of the part described herein for any particular purpose, and Pasternack does not assume any liability arising out of the use of any part or documentation.

Pasternack Enterprises, Inc. • P.O. Box 16759, Irvine, CA 92623
**Phone:** (866) 727-8376 or (949) 261-1920 • **Fax:** (949) 261-7451
Sales@Pasternack.com • Techsupport@Pasternack.com

© 2018 Pasternack Enterprises All Rights Reserved

# PE-P195 CAD Drawing

Low Loss Flexible PE-P195 Coax Cable Triple Shielded with Tan FEP Jacket

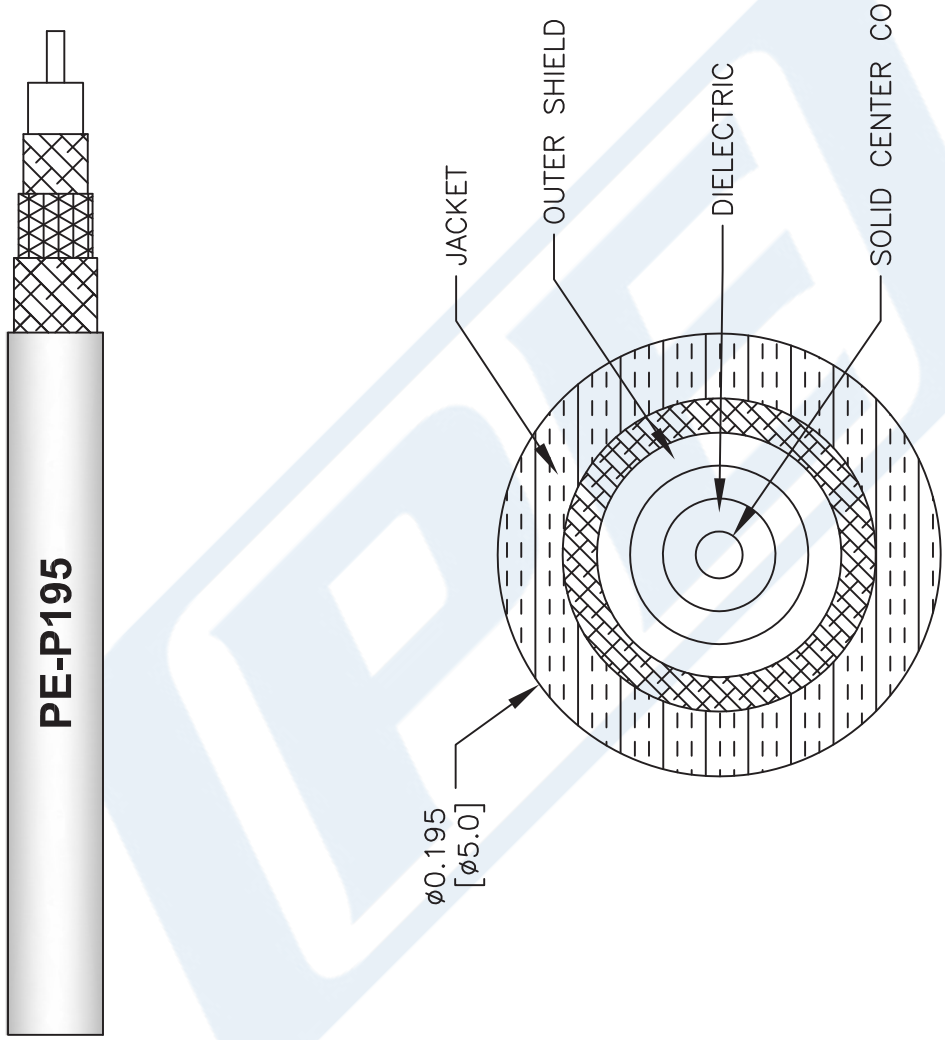


NOTES:
1. UNLESS OTHERWISE SPECIFIED ALL DIMENSIONS ARE NOMINAL.
2. ALL SPECIFICATIONS ARE SUBJECT TO CHANGE WITHOUT NOTICE AT ANY TIME.
3. DIMENSIONS ARE IN INCHES [mm].

DWG TITLE
PE-P195

CAD FILE 111716 | SCALE N/A | SIZE A | 41742

FSCM NO. 53919

PASTERNACK®
THE ENGINEER'S RF SOURCE
Pasternack Enterprises, Inc.
P.O. Box 16759 | Irvine | CA | 92623
**Phone:** (949) 261-1920 | **Fax:** (949) 261-7451
**Website:** www.pasternack.com | **E-Mail:** sales@pasternack.com

© 2018 Pasternack Enterprises All Rights Reserved