PASTERNACK®
THE ENGINEER'S RF SOURCE

4.3-10 Male Connector Crimp/Solder Attachment for LMR-600

RF Connectors
Technical Data Sheet

TIMES MICROWAVE SYSTEMS

TC-600-4310M-X

Times Microwave Systems Connector Specification

Configuration

- 4.3-10 Male Connector
- 50 Ohms
- Straight Body Geometry
- LMR-600 Interface Type
- Crimp/Solder Attachment

Features

- Max. Operating Frequency 6 GHz
- Excellent VSWR of 1.25:1
- Silver Plated Brass Contact

Applications

- General Purpose Test
- Custom Cable Assemblies
- Mobile Communications Systems
- Base Stations
- Distributed Antenna Systems (DAS)
- Small Cells
- Feeder Cables

Description

The Times Microwave TC-600-4310M-X 4.3-10 male connector with crimp/solder attachment for LMR-600 is part of our full line of RF components available for same-day shipping. This 4.3-10 male connector operates up to a maximum frequency of 6 GHz and offers good VSWR of 1.25:1.

Our datasheet specifications and drawing with dimensions for Times Microwave's 4.3-10 male connector TC-600-4310M-X are shown below in this PDF. Pasternack's broad catalog of RF, microwave and millimeter wave connectors allows designers to configure and customize their signal connections however they like. Whether the need is to provide an I/O for a board design, or simply create a custom cable assembly configuration, Pasternack has the right connector for the job. Pasternack can also expertly build your custom cable assemblies for you and ship same-day.

Electrical Specifications

Description	Minimum	Typical	Maximum	Units
Frequency Range	DC		6	GHz
VSWR			1.25:1	
Insulation Resistance	10,000			MOhms

Electrical Specification Notes:
Insertion Loss = 0.1 x SQRT(FGHz)

Mechanical Specifications

Mating Cycles	500 Cycles

Click the following link (or enter part number in "SEARCH" on website) to obtain additional part information including price, inventory and certifications: 4.3-10 Male Connector Crimp/Solder Attachment for LMR-600 TC-600-4310M-X

Pasternack Enterprises, Inc. • P.O. Box 16759, Irvine, CA 92623
Phone: (866) 727-8376 or (949) 261-1920 • **Fax:** (949) 261-7451
Sales@Pasternack.com • Techsupport@Pasternack.com

© 2018 Pasternack Enterprises All Rights Reserved

4.3-10 Male Connector Crimp/Solder Attachment for LMR-600

Material Specifications

Description	Material	Plating
Contact	Brass	Silver
Insulation	PTFE	
Body	Brass	Tri-Metal
Coupling Nut	Brass	Tri-Metal
Gasket	Silicone	
Crimp Sleeve	Brass	Tri-Metal

Environmental Specifications

Temperature

Operating Range	-55 to +125 deg C
Shock	MIL-STD 202G, Meth. 204, Cond. B
Vibration	MIL-STD 202G, Meth. 213, Cond. I
Thermal Shock	MIL-STD 202G, Meth. 107, Cond. B

Compliance Certifications (see product page for current document)

Plotted and Other Data

Notes:

Click the following link (or enter part number in "SEARCH" on website) to obtain additional part information including price, inventory and certifications: 4.3-10 Male Connector Crimp/Solder Attachment for LMR-600 TC-600-4310M-X

Pasternack Enterprises, Inc. • P.O. Box 16759, Irvine, CA 92623
Phone: (866) 727-8376 or (949) 261-1920 • **Fax:** (949) 261-7451
Sales@Pasternack.com • Techsupport@Pasternack.com

© 2018 Pasternack Enterprises All Rights Reserved

4.3-10 Male Connector Crimp/Solder Attachment for LMR-600

Assembly Instruction

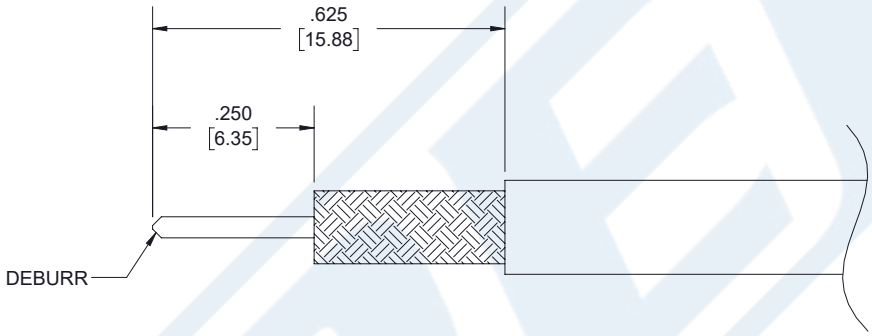

ASSEMBLY PROCEDURES

1. STRIP CABLE TO THE DIMENSIONS SHOWN, CHAMFER CENTER CONDUCTOR AND DEBURR CABLE.
2. SLIDE FERRULE OVER CABLE AND INSULATOR OVER CABLE CENTER CONDUCTOR. INSERT CENTER CONTACT AND SOLDER.
3. PUSH THE CONNECTOR BODY INTO THE CABLE UNTIL IT STOPS. SLIDE FERRULE FORWARD AND AGAINST SHOULDER OF CONNECTOR AND CRIMP.

CRIMP SIZE REQUIRED

- FERRULE: .610" [15.49] HEX CRIMP TOOL

Click the following link (or enter part number in "SEARCH" on website) to obtain additional part information including price, inventory and certifications: 4.3-10 Male Connector Crimp/Solder Attachment for LMR-600 TC-600-4310M-X

Pasternack Enterprises, Inc. • P.O. Box 16759, Irvine, CA 92623
Phone: (866) 727-8376 or (949) 261-1920 • **Fax:** (949) 261-7451
Sales@Pasternack.com • Techsupport@Pasternack.com

© 2018 Pasternack Enterprises All Rights Reserved

4.3-10 Male Connector Crimp/Solder Attachment for LMR-600

RF Connectors
Technical Data Sheet

TIMES MICROWAVE SYSTEMS

TC-600-4310M-X

4.3-10 Male Connector Crimp/Solder Attachment for LMR-600 from Pasternack Enterprises has same day shipment for domestic and International orders. Our RF, microwave and millimeter wave products maintain a 99.4% availability and are part of the broadest selection in the industry.

Click the following link (or enter part number in “SEARCH” on website) to obtain additional part information including price, inventory and certifications: 4.3-10 Male Connector Crimp/Solder Attachment for LMR-600 TC-600-4310M-X

URL: https://www.pasternack.com/4.3-10-male-lmr-600-connector-tc-600-4310m-x-p.aspx

The information contained in this document is accurate to the best of our knowledge and representative of the part described herein. It may be necessary to make modifications to the part and/or the documentation of the part, in order to implement improvements. Pasternack reserves the right to make such changes as required. Unless otherwise stated, all specifications are nominal. Pasternack does not make any representation or warranty regarding the suitability of the part described herein for any particular purpose, and Pasternack does not assume any liability arising out of the use of any part or documentation.

Pasternack Enterprises, Inc. • P.O. Box 16759, Irvine, CA 92623
Phone: (866) 727-8376 or (949) 261-1920 • **Fax:** (949) 261-7451
Sales@Pasternack.com • Techsupport@Pasternack.com

© 2018 Pasternack Enterprises All Rights Reserved

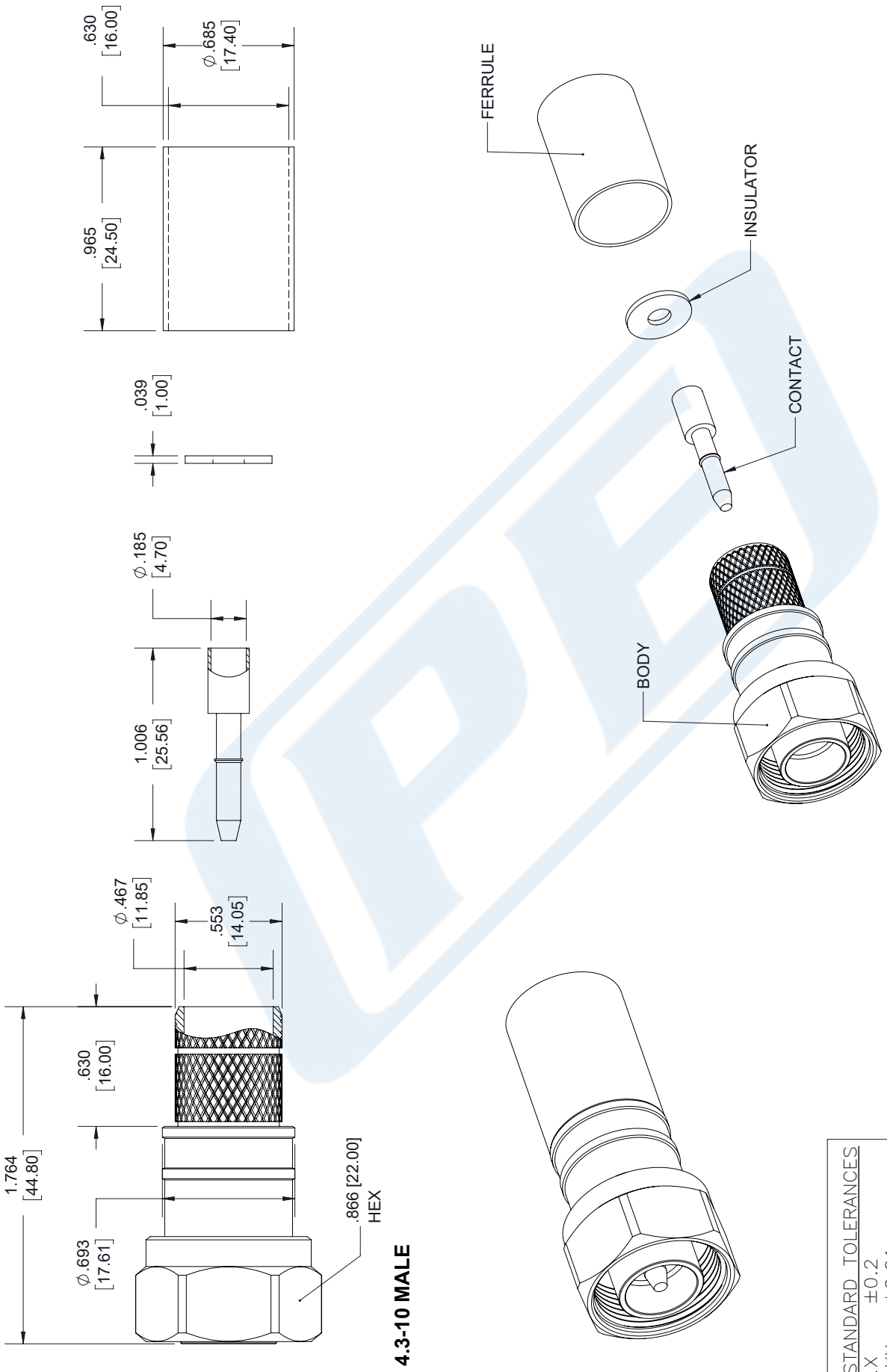

NOTES:
1. UNLESS OTHERWISE SPECIFIED ALL DIMENSIONS ARE NOMINAL.
2. ALL SPECIFICATIONS ARE SUBJECT TO CHANGE WITHOUT NOTICE AT ANY TIME.
3. DIMENSIONS ARE IN INCHES [mm].

DWG TITLE: TC-600-4310M-X

CAD FILE 04/18/18 | SCALE N/A | SIZE A | 7361

CAGE CODE 53919

PASTERNACK® THE ENGINEER'S RF SOURCE
Pasternack Enterprises, Inc.
P.O. Box 16759 | Irvine | CA | 92623
Phone: (949) 261-1920 | **Fax:** (949) 261-7451
Website: www.pasternack.com | **E-Mail:** sales@pasternack.com

© 2018 Pasternack Enterprises All Rights Reserved

NOTICE OF PROPRIETARY RIGHTS THIS DOCUMENT CONTAINS CONFIDENTIAL TECHNICAL DATA, INCLUDING TRADE SECRETS, PROPRIETARY TO TIMES MICROWAVE SYSTEMS. DISCLOSURE OF THIS DATA IS EXPRESSLY CONDITIONED UPON YOUR ASSENT THAT ITS USE IS LIMITED TO USE WITHIN YOUR COMPANY ONLY. ANY OTHER USE IS STRICTLY PROHIBITED WITHOUT THE PRIOR WRITTEN CONSENT OF TIMES MICROWAVE SYSTEMS.

SYM	REVISION DESCRIPTION	DFTM	DATE	APPD	DATE
A	RELEASED FOR PRODUCTION	K.A.M.	2/24/10	J.D.B.	3/11/10
B	CHANGED PER CDC #34322	D.J.H.	10/12/11	J.D.B.	10/27/11

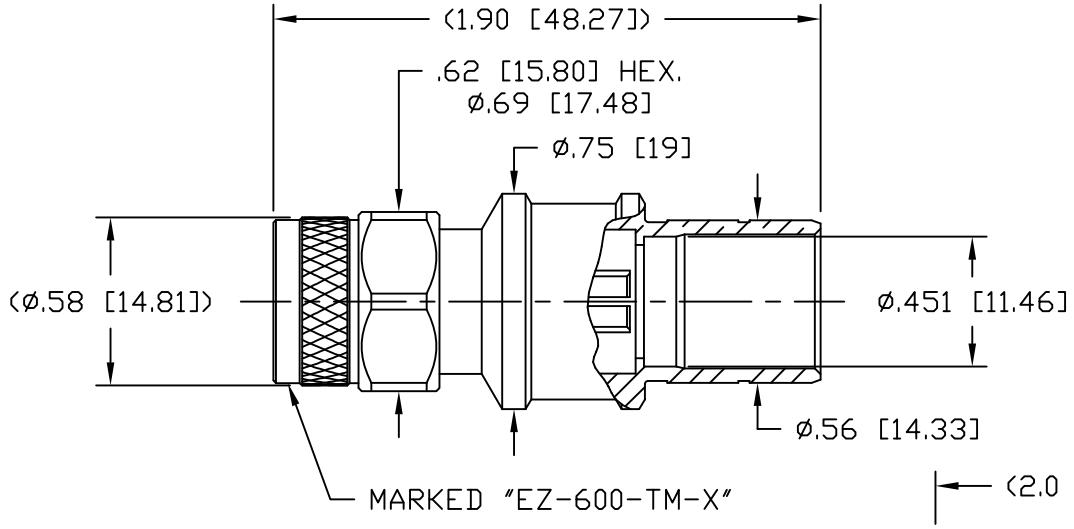

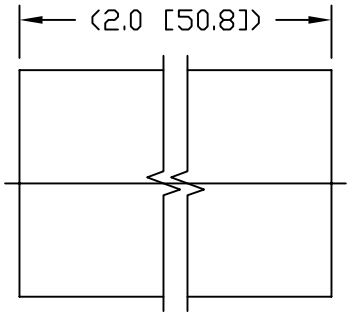

HEAT SHRINK TUBING

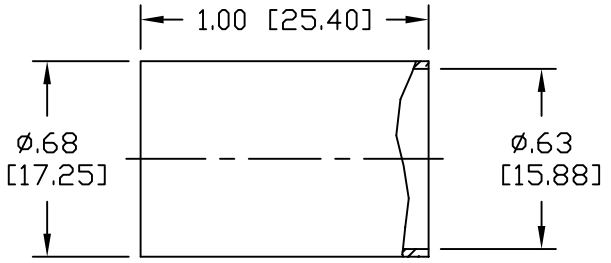

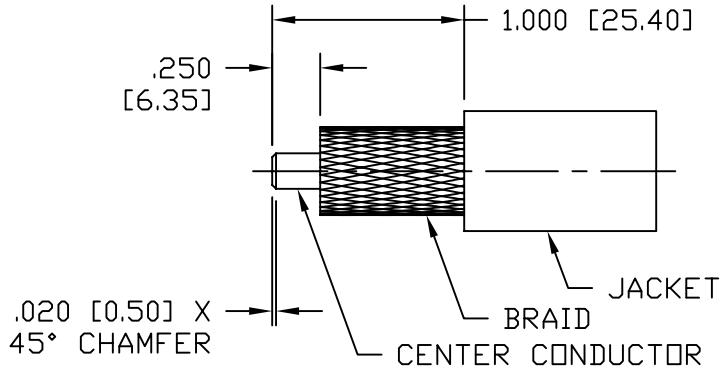

CABLE TRIMMING DIMENSIONS

NOTES:
1. MATERIALS AND FINISHES:
   BODY: BRASS, ALBALOY PLATING
   COUPLING NUT: BRASS, ALBALOY PLATING
   CENTER CONTACT: BERYLLIUM COPPER, GOLD PLATE
   INSULATOR: PTFE, NATURAL
   FERRULE: COPPER, ALBALOY PLATING
2. ELECTRICAL:
   IMPEDANCE: 50 OHMS NOMINAL
   FREQUENCY: DC-6 GHz
   VSWR: 1.2 DC-6 GHz
   DIELECTRIC WITHSTANDING VOLTAGE: 1,500 VOLTS RMS
3. MECHANICAL:
   DURABILITY: 500 CYCLES MIN.
   TEMPERATURE RANGE: -65°C TO +165°C
4. CABLING INSTRUCTIONS:
   A. SLIDE FERRULE OVER CABLE JACKET
   B. TRIM CABLE TO DIMENSIONS SHOWN. MAKE SURE CUTS ARE SHARP AND SQUARE. DO NOT NICK BRAID OR CENTER CONDUCTOR.
   C. FLAIR BRAID SLIGHTLY AND INSERT CABLE INTO BODY UNTIL BOTTOMED. (CONTACT SUPPLIED ASSEMBLED.) SLIDE THE FERRULE UP THE CABLE AND OVER THE BRAID UNTIL BOTTOMED ON BODY. CRIMP FERRULE USING A .612 HEX.

MATL:	UNLESS OTHERWISE SPECIFIED	DFTM. K. A. M.	TIMES MICROWAVE SYSTEMS
	ALL DIMENSIONS ARE IN INCHES MACHINED SURFACES FINISH 32 RMS MAX. REMOVE ALL BURRS .005 MAX. BREAK MACHINE CORNERS .005 MAX. FILLET R. TOLERANCES ON DECIMALS .XX ±.01 .XXX ±.005 ANGLES ±1° FRACTIONS ±1/64	DATE 2/24/10 CHKD. J. D. B. DATE 3/11/10 APPD. J. D. B.	**EZ-600-TM-X** PLUG, TNC, EZ FOR LMR-600
USED ON: A			
SCALE: ~ DWG. SIZE A	DO NOT SCALE DRAWING CODE IDENT 68999	DATE 3/11/10	SHT. 1 of 1 SD3190-2531 REV. B

PASTERNACK®
www.pasternack.com

Low Loss Flexible .600 inch Foam Dielectric Type Coax Cable Double Shielded with Black PE Jacket

TECHNICAL DATA SHEET PE-C600

Low Loss Flexible .600 inch Foam Dielectric Type Coax Cable Double Shielded with Black PE Jacket

Configuration

Cable Design	Low Loss
Inner Conductor Material and Plating	Copper Clad Aluminum
Dielectric Type	PE (F)
Shield Materials	Aluminum Tape, Tinned Copper Braid
Jacket Material and Color	PE, Black

Electrical Specifications

Impedance, Ohms	50
Velocity of Propagation, %	87
Maximum Operating Frequency, GHz	5.8
RF Shielding, dB	90
Capacitance, pF/ft [pF/m]	23.4 [76.77]
Jacket Spark, Vrms	5,000
Peak Power, KWatts	40

Electrical Specifications by Frequency

Frequency 1

Frequency, MHz	150
Attenuation, dB/100ft [dB/100m]	1 [3.28]
Power Handling, KWatts	2.16

Frequency 2

Frequency, MHz	450
Attenuation, dB/100ft [dB/100m]	1.7 [5.58]
Power Handling, KWatts	1.23

Frequency 3

Frequency, MHz	900
Attenuation, dB/100ft [dB/100m]	2.5 [8.2]
Power Handling, Watts	840

Frequency 4

Frequency, GHz	1.5
Attenuation, dB/100ft [dB/100m]	3.3 [10.83]
Power Handling, Watts	630

Frequency 5

Frequency, GHz	1.8
Attenuation, dB/100ft [dB/100m]	3.7 [12.14]
Power Handling, Watts	570

Click the following link (or enter part number in “SEARCH” on website) to obtain additional part information including price, inventory and certifications: Low Loss Flexible .600 inch Foam Dielectric Type Coax Cable Double Shielded with Black PE Jacket PE-C600

The information contained in this document is accurate to the best of our knowledge and representative of the part described herein. It may be necessary to make modifications to the part and/or the documentation of the part, in order to implement improvements. Pasternack reserves the right to make such changes as required. Unless otherwise stated, all specifications are nominal.

Pasternack Enterprises, Inc. • P.O. Box 16759, Irvine, CA 92623
Phone: (866) 727-8376 or (949) 261-1920 • **Fax:** (949) 261-7451
Sales@Pasternack.com • Techsupport@Pasternack.com

© 2013 Pasternack Enterprises All Rights Reserved

Low Loss Flexible .600 inch Foam Dielectric Type Coax Cable Double Shielded with Black PE Jacket

TECHNICAL DATA SHEET PE-C600

Frequency 6

Frequency, GHz	2
Attenuation, dB/100ft [dB/100m]	3.9 [12.8]
Power Handling, Watts	540

Frequency 7

Frequency, GHz	2.5
Attenuation, dB/100ft [dB/100m]	4.4 [14.44]
Power Handling, Watts	480

Frequency 8

Frequency, GHz	5.8
Attenuation, dB/100ft [dB/100m]	7.3 [23.95]
Power Handling, Watts	290

Mechanical Specifications

Temperature

Operating Range, deg C	-40 to +85
Storage Range, deg C	-40 to +85

Inner Conductor

Number of Strands	1
Material	Copper Clad Aluminum
Diameter, in [mm]	0.176 [4.47]

Dielectric:

Type	PE (F)
Diameter, in [mm]	0.455 [11.56]

Shield:

Number of	2
Material 1	Aluminum Tape
Material 2	Tinned Copper Braid
Diameter, in [mm]	0.49 [12.45]

Jacket:

Material	PE
Diameter, in [mm]	0.59 [14.99]
Color	Black
Repeated Minimum Bend Radius, in [mm]	6 [152.4]
Weight, lbs/ft [Kg/m]	0.131 [0.19]

Compliance Certifications (visit www.Pasternack.com for current document)

RoHS Compliant	Yes

Click the following link (or enter part number in “SEARCH” on website) to obtain additional part information including price, inventory and certifications: Low Loss Flexible .600 inch Foam Dielectric Type Coax Cable Double Shielded with Black PE Jacket PE-C600

The information contained in this document is accurate to the best of our knowledge and representative of the part described herein. It may be necessary to make modifications to the part and/or the documentation of the part, in order to implement improvements. Pasternack reserves the right to make such changes as required. Unless otherwise stated, all specifications are nominal.

Pasternack Enterprises, Inc. • P.O. Box 16759, Irvine, CA 92623
Phone: (866) 727-8376 or (949) 261-1920 • **Fax:** (949) 261-7451
Sales@Pasternack.com • Techsupport@Pasternack.com

© 2013 Pasternack Enterprises All Rights Reserved

PASTERNACK®
www.pasternack.com

Low Loss Flexible .600 inch Foam Dielectric Type Coax Cable Double Shielded with Black PE Jacket

TECHNICAL DATA SHEET PE-C600

Plotted and Other Data

Notes: Values at 25 °C, sea level

URL: http://www.pasternack.com/flexible-0.590-50-ohm-coax-cable-pe-jacket-pe-c600-p.aspx

Low Loss Flexible .600 inch Foam Dielectric Type Coax Cable Double Shielded with Black PE Jacket from Pasternack Enterprises has same day shipment for domestic and International orders. Our RF, microwave and fiber optic products maintain a 99% availability and are part of the broadest selection in the industry.

The information contained in this document is accurate to the best of our knowledge and representative of the part described herein. It may be necessary to make modifications to the part and/or the documentation of the part, in order to implement improvements. Pasternack reserves the right to make such changes as required. Unless otherwise stated, all specifications are nominal.

Pasternack Enterprises, Inc. • P.O. Box 16759, Irvine, CA 92623
Phone: (866) 727-8376 or (949) 261-1920 • **Fax:** (949) 261-7451
Sales@Pasternack.com • Techsupport@Pasternack.com

© 2013 Pasternack Enterprises All Rights Reserved

PE-C600 CAD Drawing

Low Loss Flexible .600 inch Foam Dielectric Type Coax
Cable Double Shielded with Black PE Jacket

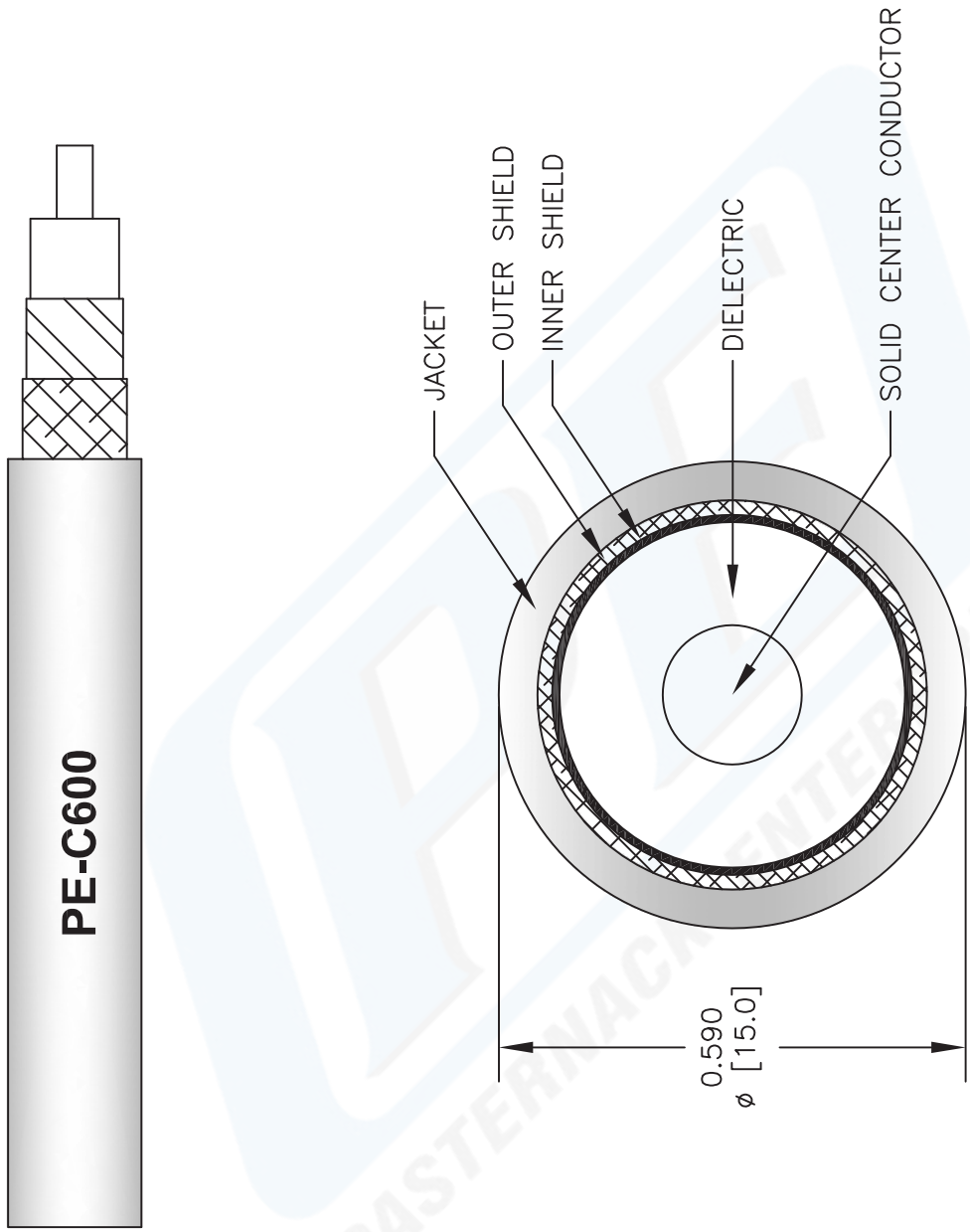

NOTES:
1. UNLESS OTHERWISE SPECIFIED ALL DIMENSIONS ARE NOMINAL.
2. ALL SPECIFICATIONS ARE SUBJECT TO CHANGE WITHOUT NOTICE AT ANY TIME.
3. DIMENSIONS ARE IN INCHES [mm].

DWG TITLE
PE-C600

FSCM NO. 53919

CAD FILE 042809 | SCALE N/A | SIZE A | 2233

PASTERNACK®
Pasternack Enterprises, Inc.
P.O. Box 16759 | Irvine | CA | 92623
Phone: (949) 261-1920 | **Fax:** (949) 261-7451
Website: www.pasternack.com | **E-Mail:** sales@pasternack.com

© 2012 Pasternack Enterprises All Rights Reserved