PASTERNACK
an INFINITE brand

SHV Jack Bulkhead Mount Connector Clamp/Solder Attachment for RG174, RG316, RG188, .480 inch D Hole

RF Connectors
Technical Data Sheet

PE45556

Configuration

- SHV Jack Connector
- MIL-STD-348
- 50 Ohms
- Straight Body Geometry
- Connector Interface Types: RG174, RG316, RG188
- Bulkhead

Features

- Silver Plated Brass Contact

Applications

- General Purpose Test
- Rack and Panel Mount Applications
- Custom Cable Assemblies

Description

Pasternack's PE45556 SHV jack bulkhead connector with clamp/solder attachment for RG174, RG316 and RG188 (.480 inch D hole) is part of our full line of RF components available for same-day shipping. This SHV bulkhead connector allows designers to create external connections on their product enclosures, and can be used in a variety of other rack mount and panel mount applications.

Our SHV jack bulkhead connector PE45556 datasheet specifications and drawing with dimensions are shown below in this PDF. Pasternack's broad catalog of RF, microwave and millimeter wave connectors allows designers to configure and customize their signal connections however they like. Whether the need is to provide an I/O for a board design, or simply create a custom cable assembly configuration, Pasternack has the right connector for the job. Pasternack can also expertly build your custom cable assemblies for you and ship same-day.

Electrical Specifications

Description	Minimum	Typical	Maximum	Units
Dielectric Withstanding Voltage (AC)			5,000	Vrms

Material Specifications

Description	Material	Plating
Contact	Brass	Silver
Insulation	PTFE	
Outer Conductor	Brass	Nickel
Body	Brass	Nickel
Gasket	Silicone Rubber	

Click the following link (or enter part number in "SEARCH" on website) to obtain additional part information including price, inventory and certifications: SHV Jack Bulkhead Mount Connector Clamp/Solder Attachment for RG174, RG316, RG188, .480 inch D Hole PE45556

Pasternack Enterprises, Inc. • P.O. Box 16759, Irvine, CA 92623
Phone: (866) 727-8376 or (949) 261-1920 • **Fax:** (949) 261-7451
Sales@Pasternack.com • Techsupport@Pasternack.com

© 2019 Pasternack Enterprises All Rights Reserved

SHV Jack Bulkhead Mount Connector Clamp/Solder Attachment for RG174, RG316, RG188, .480 inch D Hole

Environmental Specifications

Temperature

Operating Range	-65 to +165 deg C

Compliance Certifications (see product page for current document)

Plotted and Other Data

Notes:

Click the following link (or enter part number in “SEARCH” on website) to obtain additional part information including price, inventory and certifications: SHV Jack Bulkhead Mount Connector Clamp/Solder Attachment for RG174, RG316, RG188, .480 inch D Hole PE45556

Pasternack Enterprises, Inc. • P.O. Box 16759, Irvine, CA 92623
Phone: (866) 727-8376 or (949) 261-1920 • **Fax:** (949) 261-7451
Sales@Pasternack.com • Techsupport@Pasternack.com

© 2019 Pasternack Enterprises All Rights Reserved

SHV Jack Bulkhead Mount Connector Clamp/Solder Attachment for RG174, RG316, RG188, .480 inch D Hole

Assembly Instruction

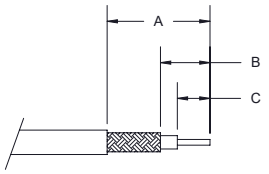

STRIPPING DIMENSIONS

A .540 [13.72]
B .260 [6.60]
C .240 [6.10]

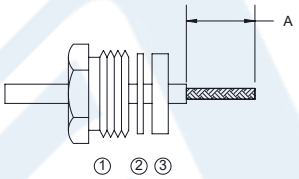

1. SLIDE CLAMP NUT ①, THINNER WASHER ② & GASKET ③ OVER CABLE. STRIP CABLE AS SHOWN. DO NOT NICK BRAID WHILE CUTTING JACKET. TAPER END OF BRAID TO PERMIT ASSEMBLY OF CLAMP.

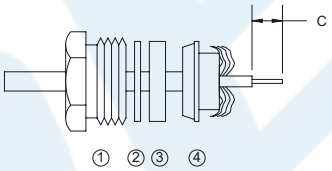

2. SLIDE BRAID CLAMP ④ OVER BRAID & SEAT AGAINST CABLE. FORM BRAID OVER CLAMP NUT. TRIM BRAID BACK TO SHOULDER. CUT DIELECTRIC & CENTER CONDUCTOR TO DIMENSION SHOWN. DO NOT NICK CENTER CONDUCTOR.

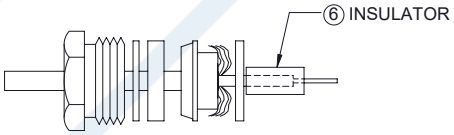

3. SLIDE THICKER WASHER ⑤ AND INSULATOR ⑥ AGAINST THE BRAID CLAMP. SOFT SOLDER CONTACT ⑦ TO CENTER CONDUCTOR. REMOVE EXCESS SOLDER. DO NOT OVER HEAT DIELECTRIC. INSERT CABLE ASSEMBLY INTO BODY ⑧ & TIGHTEN BY CLAMP NUT ONLY.

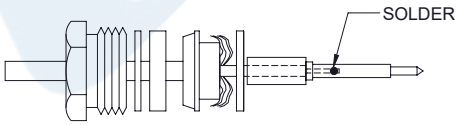

① ② ③ ④ ⑤ ⑥ ⑦

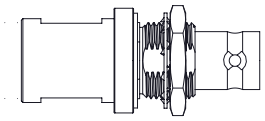

⑧

Click the following link (or enter part number in “SEARCH” on website) to obtain additional part information including price, inventory and certifications: SHV Jack Bulkhead Mount Connector Clamp/Solder Attachment for RG174, RG316, RG188, .480 inch D Hole PE45556

Pasternack Enterprises, Inc. • P.O. Box 16759, Irvine, CA 92623
Phone: (866) 727-8376 or (949) 261-1920 • **Fax:** (949) 261-7451
Sales@Pasternack.com • Techsupport@Pasternack.com

© 2019 Pasternack Enterprises All Rights Reserved

SHV Jack Bulkhead Mount Connector Clamp/Solder Attachment for RG174, RG316, RG188, .480 inch D Hole

RF Connectors
Technical Data Sheet

PE45556

SHV Jack Bulkhead Mount Connector Clamp/Solder Attachment for RG174, RG316, RG188, .480 inch D Hole from Pasternack Enterprises has same day shipment for domestic and International orders. Our RF, microwave and millimeter wave products maintain a 99.4% availability and are part of the broadest selection in the industry.

Click the following link (or enter part number in “SEARCH” on website) to obtain additional part information including price, inventory and certifications: SHV Jack Bulkhead Mount Connector Clamp/Solder Attachment for RG174, RG316, RG188, .480 inch D Hole PE45556

URL: https://www.pasternack.com/shv-jack-rg174-rg316-rg188-connector-pe45556-p.aspx

The information contained in this document is accurate to the best of our knowledge and representative of the part described herein. It may be necessary to make modifications to the part and/or the documentation of the part, in order to implement improvements. Pasternack reserves the right to make such changes as required. Unless otherwise stated, all specifications are nominal. Pasternack does not make any representation or warranty regarding the suitability of the part described herein for any particular purpose, and Pasternack does not assume any liability arising out of the use of any part or documentation.

Pasternack Enterprises, Inc. • P.O. Box 16759, Irvine, CA 92623
Phone: (866) 727-8376 or (949) 261-1920 • **Fax:** (949) 261-7451
Sales@Pasternack.com • Techsupport@Pasternack.com

© 2019 Pasternack Enterprises All Rights Reserved

PE45556 CAD Drawing

SHV Jack Bulkhead Mount Connector Clamp/Solder Attachment
for RG174, RG316, RG188, .480 inch D Hole

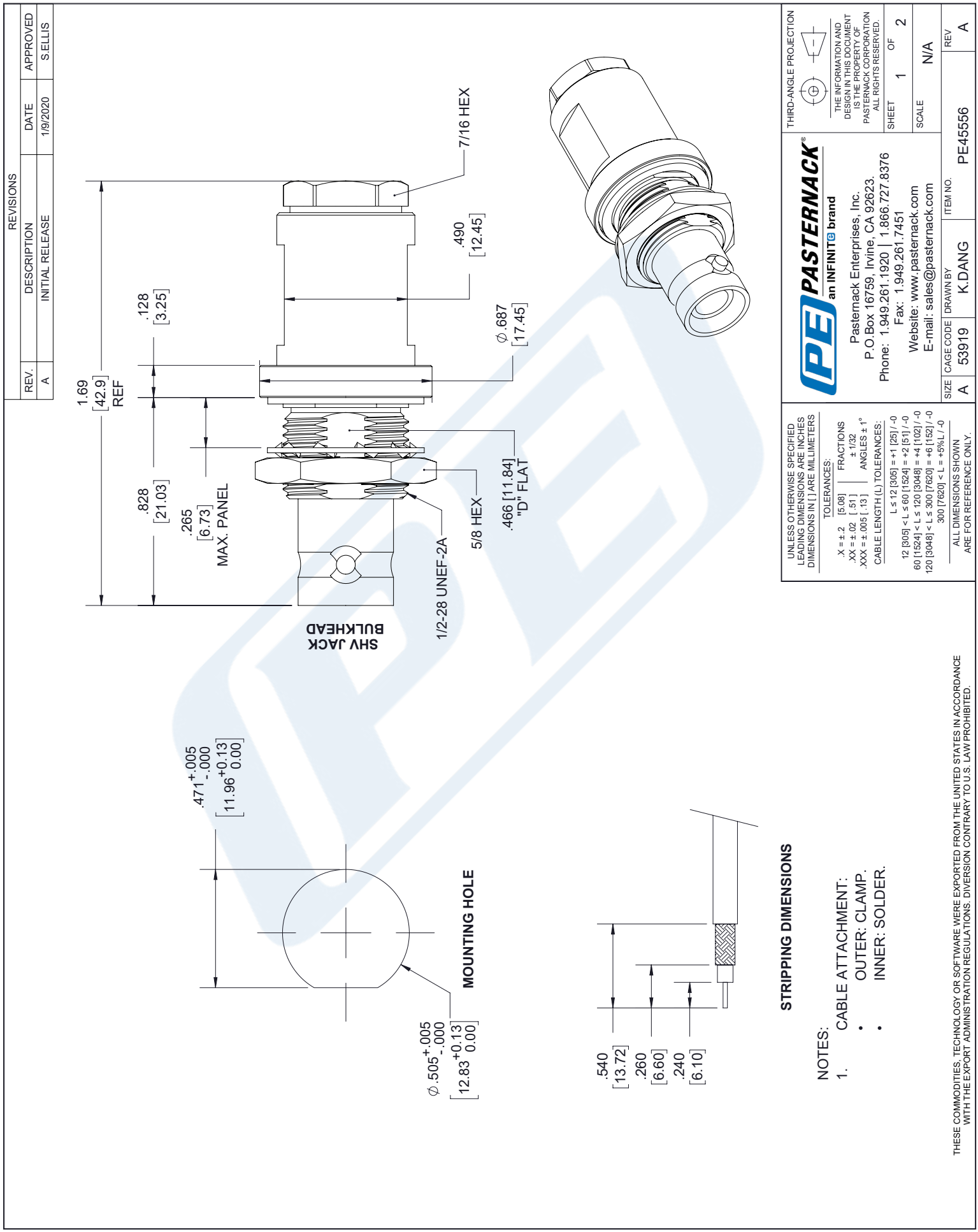

NOTICE OF PROPRIETARY RIGHTS THIS DOCUMENT CONTAINS CONFIDENTIAL TECHNICAL DATA, INCLUDING TRADE SECRETS, PROPRIETARY TO TIMES MICROWAVE SYSTEMS. DISCLOSURE OF THIS DATA IS EXPRESSLY CONDITIONED UPON YOUR ASSENT THAT ITS USE IS LIMITED TO USE WITHIN YOUR COMPANY ONLY. ANY OTHER USE IS STRICTLY PROHIBITED WITHOUT THE PRIOR WRITTEN CONSENT OF TIMES MICROWAVE SYSTEMS.

SYM	REVISION DESCRIPTION	DFTM	DATE	APPD	DATE
–	RELEASED FOR PRODUCTION	J.C.L.	8/20/03	J.C.L.	8/20/03
A	CHANGED PER CDC #36704	D.J.H.	1/14/13	J.D.B.	1/15/13
B	CHANGED PER CDC #37206	J.D.B.	3/26/13	J.D.B.	3/26/13
C	CHANGED PER CDC #54172	D.J.H.	3/2/20	D.A.R.	3/2/20

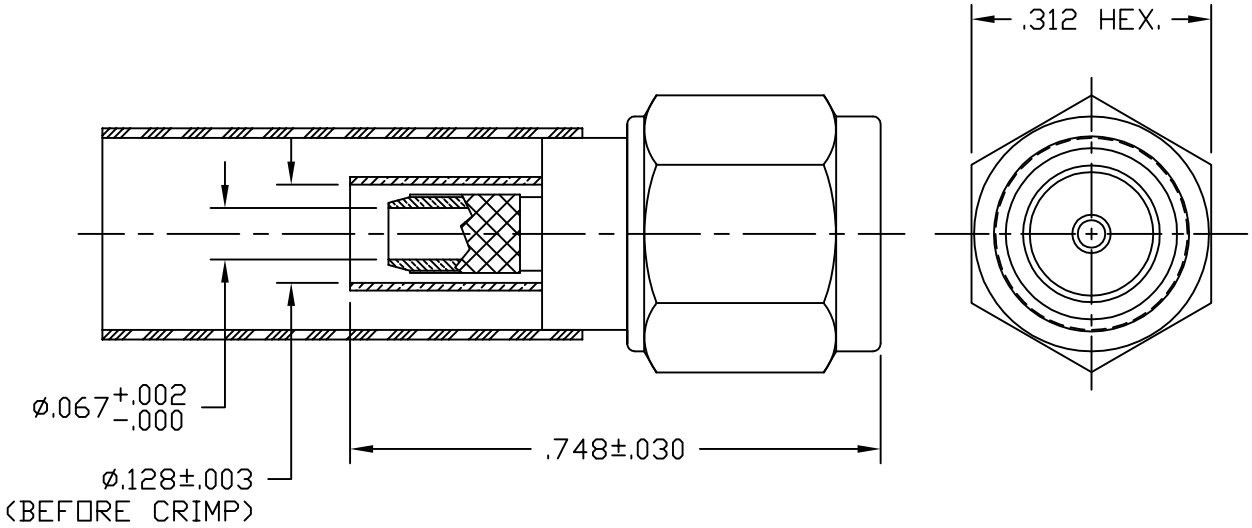

NOTES:

1. ASSEMBLED CONNECTOR INTERFACE IS DESIGNED IN ACCORDANCE WITH MIL-STD-348.
2. MATERIAL: BODY & HEX COUPLING NUT- CORROSION RESISTANT STEEL PER ASTM A582.
   CONTACT - BERYLLIUM COPPER PER ASTM B196.
   INSULATOR - TEFLON PER ASTM D1710
   GASKET - SILICONE RUBBER PER ZZ-R-765
   SHRINK SLEEVE - SHRINKABLE POLYOLEFIN PER MIL-I-23053/5
3. FINISHES: BODY & HEX COUPLING NUT - PASSIVATE PER QQ-P-35
   CONTACT - GOLD PLATE PER MIL-G-45204
4. CONTACT PIN IS SOLDERED.
5. CRIMP THE FERRULE TO .128″ HEX.

MATL:	UNLESS OTHERWISE SPECIFIED ALL DIMENSIONS ARE IN INCHES MACHINED SURFACES FINISH N/A RMS MAX. REMOVE ALL BURRS .005 MAX. BREAK MACHINE CORNERS .005 MAX. FILLET R. TOLERANCES ON DECIMALS .XX ±.03 .XXX ±.005 ANGLES ±1° FRACTIONS ±1/32	DFTM. J. C. L. DATE 8/20/03 CHKD. J. C. L. DATE 8/20/03 APPD. J. C. L. DATE 8/20/03	TIMES MICROWAVE SYSTEMS **TC-100-SM** SMA MALE FOR LMR100 CABLE
USED ON: B			
SCALE: N/A DWG. SIZE A	DO NOT SCALE DRAWING CODE IDENT 68999	SHT. 1 of 1	SD3190-1551 REV. C

Flexible RG174 Coax Cable Single Shielded with Black PVC Jacket

RF Cables
Technical Data Sheet

RG174A/U

Times Microwave Systems Coax Cable Specification

Configuration

- Flexible Cable
- 1 Shield(s)

Electrical Specifications

Description	Minimum	Typical	Maximum	Units
Frequency Range	DC		1,000	MHz
Impedance		50		Ohms
Velocity of Propagation		66		%
Nominal Capacitance		31.08 [101.97]		pF/ft [pF/m]

Performance by Frequency Band

Description	F1	F2	F3	F4	F5	Units
Frequency	100	400	1,000			MHz
Attenuation, Typ	8.4	19	32			dB/100ft
	27.56	62.34	104.99			dB/100m

Mechanical Specifications

Diameter	0.11 in [2.79 mm]
Weight	0.009 lbs/ft [0.01 Kg/m]

Construction Specifications

Description	Material and Plating	Diameter
Inner Conductor	Copper Clad Steel, 7 Strands	0.019 in [0.48 mm]
Conductor Type	Stranded	
Dielectric	PE	0.06 in [1.52 mm]
First Shield	Tinned Copper Braid	0.078 in [1.98 mm]

Click the following link (or enter part number in “SEARCH” on website) to obtain additional part information including price, inventory and certifications: Flexible RG174 Coax Cable Single Shielded with Black PVC Jacket RG174A/U

Pasternack Enterprises, Inc. • P.O. Box 16759, Irvine, CA 92623
Phone: (866) 727-8376 or (949) 261-1920 • **Fax:** (949) 261-7451
Sales@Pasternack.com • Techsupport@Pasternack.com

© 2018 Pasternack Enterprises All Rights Reserved

Jacket	PVC, Black	0.11 in [2.79 mm]

Environmental Specifications

Temperature

Operating Range	-40 to +80 deg C

Compliance Certifications (see product page for current document)

Plotted and Other Data

Notes:

Flexible RG174 Coax Cable Single Shielded with Black PVC Jacket from Pasternack Enterprises has same day shipment for domestic and International orders. Our RF, microwave and millimeter wave products maintain a 99.4% availability and are part of the broadest selection in the industry.

Click the following link (or enter part number in "SEARCH" on website) to obtain additional part information including price, inventory and certifications: Flexible RG174 Coax Cable Single Shielded with Black PVC Jacket RG174A/U

URL: https://www.pasternack.com/flexible-0.100-rg174-50-ohm-coax-cable-pvc-jacket-rg174a-u-p.aspx

The information contained in this document is accurate to the best of our knowledge and representative of the part described herein. It may be necessary to make modifications to the part and/or the documentation of the part, in order to implement improvements. Pasternack reserves the right to make such changes as required. Unless otherwise stated, all specifications are nominal. Pasternack does not make any representation or warranty regarding the suitability of the part described herein for any particular purpose, and Pasternack does not assume any liability arising out of the use of any part or documentation.

Pasternack Enterprises, Inc. • P.O. Box 16759, Irvine, CA 92623
Phone: (866) 727-8376 or (949) 261-1920 • **Fax:** (949) 261-7451
Sales@Pasternack.com • Techsupport@Pasternack.com

© 2018 Pasternack Enterprises All Rights Reserved

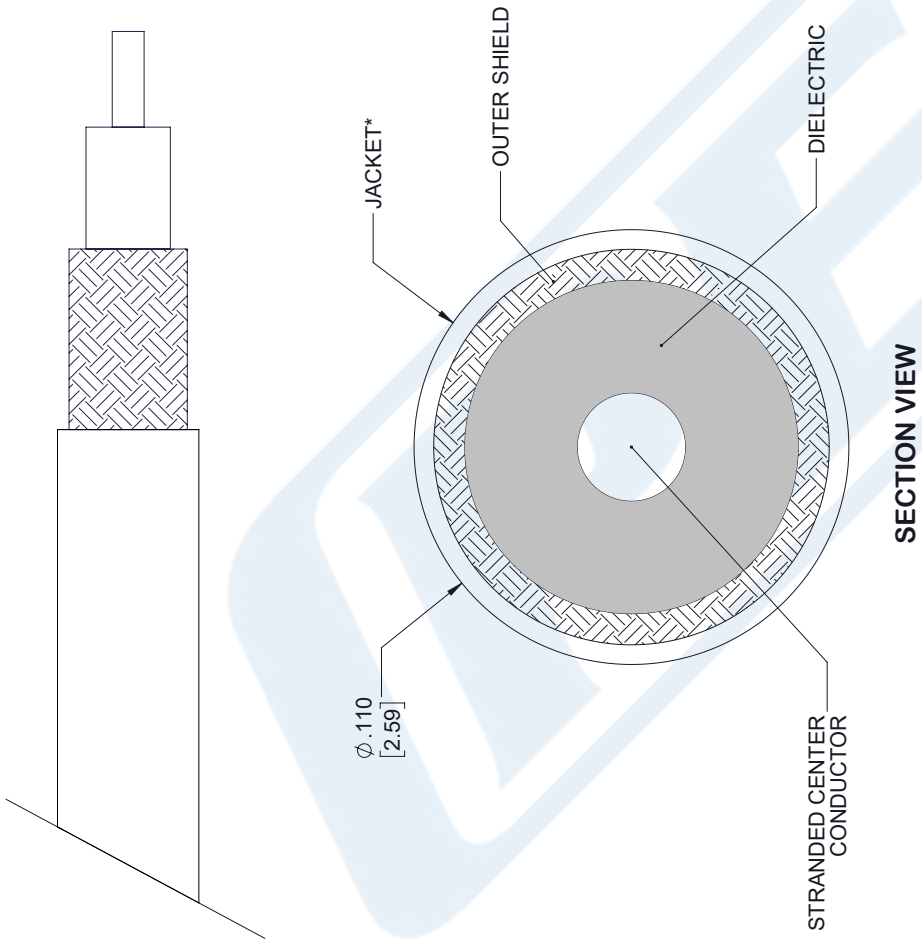

NOTE:
*STANDARD TOLERANCES APPLY ONLY TO DIMENSIONS IN INCHES

STANDARD TOLERANCES	
.X	±0.2
.XX	±0.01
.XXX	±0.005

NOTES:
1. UNLESS OTHERWISE SPECIFIED ALL DIMENSIONS ARE NOMINAL.
2. ALL SPECIFICATIONS ARE SUBJECT TO CHANGE WITHOUT NOTICE AT ANY TIME
3. DIMENSIONS ARE IN INCHES [mm].

DWG TITLE RG174A/U

CAD FILE 05/25/18 | SCALE N/A | SIZE A | 7361

CAGE CODE 53919

PASTERNACK® THE ENGINEER'S RF SOURCE
Pasternack Enterprises, Inc.
P.O. Box 16759 | Irvine | CA | 92623
Phone: (949) 261-1920 | **Fax:** (949) 261-7451
Website: www.pasternack.com | **E-Mail:** sales@pasternack.com

© 2018 Pasternack Enterprises All Rights Reserved