PASTERNACK
an INFINITE brand

# 2.2-5 Male Low PIM Connector Solder Attachment for PE-1/4SFHC, SPP-250-LLPL, SPO-250, SPF-250

## RF Connectors
## Technical Data Sheet

**PE45673**

## Configuration

- 2.2-5 Male Connector
- 50 Ohms
- Straight Body Geometry
- Connector Interface Types: PE-1/4SFHC, SPP-250-LL-PL, SPO-250, SPF-250
- Low PIM Design

## Features

- Max. Operating Frequency 6 GHz
- PIM levels lower than -155 dBc
- Silver Plated Brass Contact

## Applications

- General Purpose Test
- Wireless Communications
- Custom Cable Assemblies
- Low PIM Applications

### Description

Pasternack's PE45673 , 2.2-5, Low PIM, Connector is part of our full line of RF components available for same-day shipping. Our 2.2-5 male connector operates up to a maximum frequency of 6 GHz. The 2.2-5 male connector also has low passive intermodulation of -155 dBc.

Our 2.2-5 male connector PE45673 datasheet specifications and drawing with dimensions are shown below in this PDF. Pasternack's broad catalog of RF, microwave and millimeter wave connectors allows designers to configure and customize their signal connections however they like. Whether the need is to provide an I/O for a board design, or simply create a custom cable assembly configuration, Pasternack has the right connector for the job. Pasternack can also expertly build your custom cable assemblies for you and ship same-day.

### Electrical Specifications

| Description | Minimum | Typical | Maximum | Units |
|---|---|---|---|---|
| Frequency Range | DC | | 6 | GHz |
| Passive Intermodulation | | | -155 | dBc |
| Impedance | | 50 | | Ohms |
| Dielectric Withstanding Voltage (AC) | | | 750 | Vrms |

### Performance by Frequency

| Description | F1 | F2 | F3 | F4 | F5 | Units |
|---|---|---|---|---|---|---|
| Frequency Range | DC to 3 | 3 to 6 | | | | GHz |
| VSWR, Max | 1.15:1 | 1.25:1 | | | | |

Click the following link (or enter part number in "SEARCH" on website) to obtain additional part information including price, inventory and certifications: 2.2-5 Male Low PIM Connector Solder Attachment for PE-1/4SFHC, SPP-250-LLPL, SPO-250, SPF-250 PE45673

Pasternack Enterprises, Inc. • P.O. Box 16759, Irvine, CA 92623
**Phone:** (866) 727-8376 or (949) 261-1920 • **Fax:** (949) 261-7451
Sales@Pasternack.com • Techsupport@Pasternack.com

© 2020 Pasternack Enterprises All Rights Reserved

PASTERNACK
an INFINITE brand

# 2.2-5 Male Low PIM Connector Solder Attachment for PE-1/4SFHC, SPP-250-LLPL, SPO-250, SPF-250

## RF Connectors
## Technical Data Sheet

**PE45673**

### Mechanical Specifications

**Size**

| | |
|---|---|
| Length | 0.89 in [22.61 mm] |
| Width | 0.69 in [17.53 mm] |
| Height | 0.69 in [17.53 mm] |
| Weight | 0.05 lbs [22.68 g] |

**Material Specifications**

| Description | Material | Plating |
|---|---|---|
| Contact | Brass | Silver |
| Insulation | PTFE | |
| Body | Brass | Tri-Metal |
| Coupling Nut | Brass | Tri-Metal |
| O-Ring | Silicone | |

### Environmental Specifications

**Temperature**

| | |
|---|---|
| Operating Range | -40 to +155 deg C |

### Compliance Certifications (see product page for current document)

### Plotted and Other Data

Notes:

2.2-5 Male Low PIM Connector Solder Attachment for PE-1/4SFHC, SPP-250-LLPL, SPO-250, SPF-250 from Pasternack Enterprises has same day shipment for domestic and International orders. Our RF, microwave and millimeter wave products maintain a 99.4% availability and are part of the broadest selection in the industry.

Click the following link (or enter part number in “SEARCH” on website) to obtain additional part information including price, inventory and certifications: 2.2-5 Male Low PIM Connector Solder Attachment for PE-1/4SFHC, SPP-250-LLPL, SPO-250, SPF-250 PE45673

URL: https://www.pasternack.com/2.2-5-male-pe-1-4sfhc-spp-250-llpl-connector-pe45673-p.aspx

The information contained in this document is accurate to the best of our knowledge and representative of the part described herein. It may be necessary to make modifications to the part and/or the documentation of the part, in order to implement improvements. Pasternack reserves the right to make such changes as required. Unless otherwise stated, all specifications are nominal. Pasternack does not make any representation or warranty regarding the suitability of the part described herein for any particular purpose, and Pasternack does not assume any liability arising out of the use of any part or documentation.

Pasternack Enterprises, Inc. • P.O. Box 16759, Irvine, CA 92623
**Phone:** (866) 727-8376 or (949) 261-1920 • **Fax:** (949) 261-7451
Sales@Pasternack.com • Techsupport@Pasternack.com

© 2020 Pasternack Enterprises All Rights Reserved

# PE45673 CAD Drawing

2.2-5 Male Low PIM Connector Solder Attachment for PE-1/4SFHC, SPP-250-LLPL, SPO-250, SPF-250

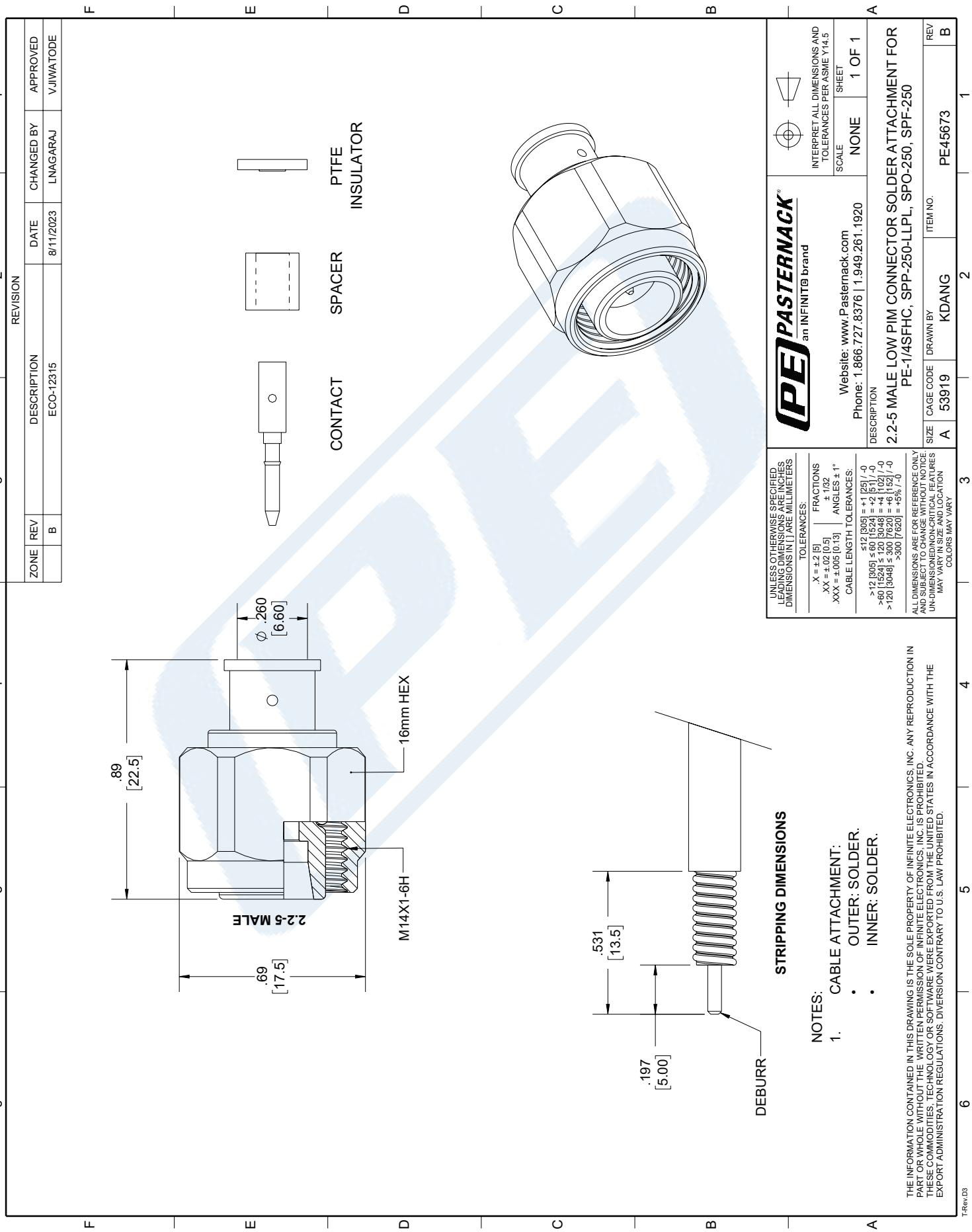


© 2020 Pasternack Enterprises All Rights Reserved

PASTERNACK®
THE ENGINEER'S RF SOURCE

# N Male Low PIM Connector Clamp/Non-Solder Contact Attachment for 1/4 inch Superflexible, PE-1/4SFHC, IP67 Rated



## Configuration

- N Male Connector
- IEC 60169-16
- 50 Ohms
- Straight Body Geometry
- 1/4 inch Superflexible, PE-1/4SFHC Interface Type
- Clamp/Non-Solder Contact Attachment
- 19 mm Hex
- Low PIM Design

## Features

- Max. Operating Frequency 3 GHz
- Excellent VSWR of 1.1:1
- PIM levels lower than -160 dBc
- Silver Plated Spring Copper Contact
- 5 µm minimum contact plating
- IP67 Rated

## Applications

- General Purpose Test
- Wireless Communications
- Custom Cable Assemblies
- Low PIM Applications

### Description

Pasternack's PE44726 type N male low PIM connector with clamp/non-solder contact attachment for 1/4 inch Superflexible and PE-1/4SFHC is part of our full line of RF components available for same-day shipping. Our type N male connector operates up to a maximum frequency of 3 GHz and offers excellent VSWR of 1.1:1. The type N male connector also has low passive intermodulation of -160 dBc. The connector has an IP67 rating to protect against dust and temporary moisture protection under immersion conditions.

Our type N male connector PE44726 datasheet specifications and drawing with dimensions are shown below in this PDF. Pasternack's broad catalog of RF, microwave and millimeter wave connectors allows designers to configure and customize their signal connections however they like. Whether the need is to provide an I/O for a board design, or simply create a custom cable assembly configuration, Pasternack has the right connector for the job. Pasternack can also expertly build your custom cable assemblies for you and ship same-day.

### Electrical Specifications

| Description | Minimum | Typical | Maximum | Units |
|---|---|---|---|---|
| Frequency Range | DC | | 3 | GHz |
| VSWR | | | 1.1:1 | |
| Insertion Loss | | | 0.1 | dB |
| Passive Intermodulation using 2x20W tones | | | -160 | dBc |
| Operating Voltage (DC) | | | 1,700 | Vdc |
| Dielectric Withstanding Voltage (DC) | | | 2,500 | Vdc |
| Insulation Resistance | 5,000 | | | MOhms |

Click the following link (or enter part number in "SEARCH" on website) to obtain additional part information including price, inventory and certifications: N Male Low PIM Connector Clamp/Non-Solder Contact Attachment for 1/4 inch Superflexible, PE-1/4SFHC, IP67 Rated PE44726

Pasternack Enterprises, Inc. • P.O. Box 16759, Irvine, CA 92623
**Phone:** (866) 727-8376 or (949) 261-1920 • **Fax:** (949) 261-7451
Sales@Pasternack.com • Techsupport@Pasternack.com

© 2016 Pasternack Enterprises All Rights Reserved

# N Male Low PIM Connector Clamp/Non-Solder Contact Attachment for 1/4 inch Superflexible, PE-1/4SFHC, IP67 Rated



## Mechanical Specifications

**Size**

| | |
|---|---|
| Length | 1.96 in [49.78 mm] |
| Width/Dia. | 0.748 in [19.00 mm] |
| Weight | 0.6 lbs [272.16 g] |

**Material Specifications**

| Description | Material | Plating |
|---|---|---|
| Contact | Spring Copper | Silver<br>5 µm minimum |
| Insulation | PTFE | |
| Outer Conductor | Brass | Nickel<br>5 µm minimum |
| Body | Brass | Tri-Metal<br>2 µm minimum |
| Coupling Nut | Brass | Nickel<br>5 µm minimum |

## Environmental Specifications

**Temperature**

| | |
|---|---|
| Operating Range | -40 to +85 deg C |
| Ingress Protection (IP) Rating | IP67 Rated |
| Shock | IEC 60068-2-27 |
| Vibration | IEC 60068-2-6-Fc |
| Thermal Shock | IEC 60068-2-14-Na |

Click the following link (or enter part number in "SEARCH" on website) to obtain additional part information including price, inventory and certifications: N Male Low PIM Connector Clamp/Non-Solder Contact Attachment for 1/4 inch Superflexible, PE-1/4SFHC, IP67 Rated PE44726

Pasternack Enterprises, Inc. • P.O. Box 16759, Irvine, CA 92623
**Phone:** (866) 727-8376 or (949) 261-1920 • **Fax:** (949) 261-7451
Sales@Pasternack.com • Techsupport@Pasternack.com

© 2016 Pasternack Enterprises All Rights Reserved

# N Male Low PIM Connector Clamp/Non-Solder Contact Attachment for 1/4 inch Superflexible, PE-1/4SFHC, IP67 Rated



**Compliance Certifications** (see product page for current document)

**Plotted and Other Data**

Notes:

N Male Low PIM Connector Clamp/Non-Solder Contact Attachment for 1/4 inch Superflexible, PE-1/4SFHC, IP67 Rated from Pasternack Enterprises has same day shipment for domestic and International orders. Our RF, microwave and millimeter wave products maintain a 99% availability and are part of the broadest selection in the industry.

Click the following link (or enter part number in "SEARCH" on website) to obtain additional part information including price, inventory and certifications: N Male Low PIM Connector Clamp/Non-Solder Contact Attachment for 1/4 inch Superflexible, PE-1/4SFHC, IP67 Rated PE44726

URL: https://www.pasternack.com/n-male-standard-1-4-inch-super-flexible-pe-1-4sfhc-connector-pe44726-p.aspx

The information contained in this document is accurate to the best of our knowledge and representative of the part described herein. It may be necessary to make modifications to the part and/or the documentation of the part, in order to implement improvements. Pasternack reserves the right to make such changes as required. Unless otherwise stated, all specifications are nominal. Pasternack does not make any representation or warranty regarding the suitability of the part described herein for any particular purpose, and Pasternack does not assume any liability arising out of the use of any part or documentation.

Pasternack Enterprises, Inc. • P.O. Box 16759, Irvine, CA 92623
**Phone:** (866) 727-8376 or (949) 261-1920 • **Fax:** (949) 261-7451
Sales@Pasternack.com • Techsupport@Pasternack.com

© 2016 Pasternack Enterprises All Rights Reserved

# PE44726 CAD Drawing

N Male Low PIM Connector Clamp/Non-Solder Contact Attachment
for 1/4 inch Superflexible, PE-1/4SFHC, IP67 Rated

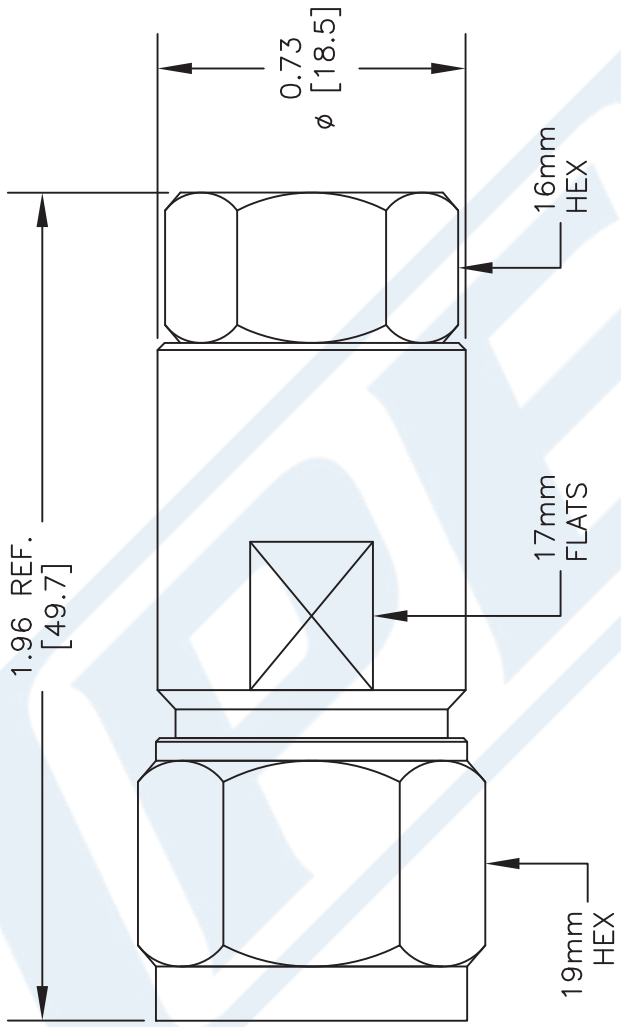


N MALE

NOTES:
1. UNLESS OTHERWISE SPECIFIED ALL DIMENSIONS ARE NOMINAL.
2. ALL SPECIFICATIONS ARE SUBJECT TO CHANGE WITHOUT NOTICE AT ANY TIME.
3. DIMENSIONS ARE IN INCHES [mm].

DWG TITLE PE44726

REV. - | FSCM NO. 53919 | DATE 081412 | SCALE N/A | SIZE A | 2233

PASTERNACK ENTERPRISES, INC.
P.O BOX 16759, IRVINE, CA 92623
PHONE (949) 261-1920 FAX (949) 261-7451
WEB ADDRESS: www.pasternack.com
E-MAIL ADDRESS: sales@pasternack.com
COAXIAL & FIBER OPTICS
PASTERNACK ENTERPRISES®
ESTABLISHED 1972

© 2016 Pasternack Enterprises All Rights Reserved

PASTERNACK
an INFINITE brand

# Low Loss 1/4 Superflexible Helical Corrugated Coax Cable with Black PE Jacket

RF Cables
Technical Data Sheet

PE-1/4SFHC

## Configuration

- Low Loss Corrugated Cable
- 1 Shield(s)

## Features

- Low Passive Intermodulation
- Solid copper outer conductor provides the highest possible RF shielding
- Excellent return loss performance
- Highly foamed dielectric provides low attenuation
- Superflexible helically corrugated copper outer conductor enables a small bending radius

### Description

Our corrugated cables and Low PIM connector combinations result in cable assemblies with excellent Passive Intermodulation performance. Solid copper outer conductors provide the highest possible RF shielding. This Superflexible cable features excellent return loss performance. The highly foamed dielectric and optimized dimensions of these cables result in excellent low attenuation values. The Superflexible helically corrugated copper outer conductor allows for a small bending radius.

### Electrical Specifications

| Description | Minimum | Typical | Maximum | Units |
|---|---|---|---|---|
| Frequency Range | DC | | 20.4 | GHz |
| Cutoff Frequency | | 25 | | GHz |
| Impedance | | 50 | | Ohms |
| Velocity of Propagation | | 82 | | % |
| Shielding Effectiveness | 120 | | | dB |
| Dielectric Withstanding Voltage (DC) | | | 900 | Vdc |
| Jacket Spark | | | 2,000 | Vrms |
| Inner Conductor DC Resistance | | | 3.2 | Ohms/1000ft |
| Outer Conductor DC Resistance | | | 2.53 | Ohms/1000ft |
| Nominal Capacitance | | 24.4 [80.05] | | pF/ft [pF/m] |
| Nominal Inductance | | 0.059 [0.19] | | uH/ft [uH/m] |

Click the following link (or enter part number in “SEARCH” on website) to obtain additional part information including price, inventory and certifications: Low Loss 1/4 Superflexible Helical Corrugated Coax Cable with Black PE Jacket PE-1/4SFHC

Pasternack Enterprises, Inc. • P.O. Box 16759, Irvine, CA 92623
**Phone:** (866) 727-8376 or (949) 261-1920 • **Fax:** (949) 261-7451
Sales@Pasternack.com • Techsupport@Pasternack.com

© 2020 Pasternack Enterprises All Rights Reserved

PASTERNACK
an INFINITE brand

# Low Loss 1/4 Superflexible Helical Corrugated Coax Cable with Black PE Jacket

## RF Cables
## Technical Data Sheet

PE-1/4SFHC

### Performance by Frequency Band

| Description | F1 | F2 | F3 | F4 | F5 | Units |
|---|---|---|---|---|---|---|
| Frequency | 0.03 | 0.15 | 0.45 | 0.9 | 1.5 | GHz |
| Attenuation, Typ | 0.94 | 2.14 | 3.75 | 5.46 | 7.26 | dB/100ft |
| | 3.08 | 7.02 | 12.3 | 17.91 | 23.82 | dB/100m |
| Input Power (CW), Max | 2,090 | 924 | 520 | 360 | 278 | Watts |

| Description | F6 | F7 | F8 | F9 | F10 | Units |
|---|---|---|---|---|---|---|
| Frequency | 1.8 | 2 | 2.2 | 2.5 | 3 | GHz |
| Attenuation, Typ | 8.02 | 8.52 | 8.99 | 9.67 | 10.73 | dB/100ft |
| | 26.31 | 27.95 | 29.49 | 31.73 | 35.2 | dB/100m |
| Input Power (CW), Max | 250 | 238 | 230 | 210 | 190 | Watts |

### Mechanical Specifications

| | |
|---|---|
| Diameter | 0.303 in [7.7 mm} |
| Weight | 0.048 lbs/ft [0.07 kg/m] |
| Number of Bends, Min | 20 |
| Min. Bend Radius (Installation) | 0.5 in [12.7 mm] |
| Min. Bend Radius (Repeated) | 1 in [25.4 mm] |
| Tensile Strength | 79 lbs [35.83 kg] |

### Construction Specifications

| Description | Material and Plating | Diameter |
|---|---|---|
| Inner Conductor | Copper Clad Aluminum, 1 Strand | 0.074 in [1.88 mm] |
| Conductor Type | Solid | |
| Dielectric | PE (F) | 0.187 in [4.75 mm] |
| First Shield | Helically Corrugated Copper Tube | 0.25 in [6.35 mm] |
| Jacket | PE, Black | 0.303 in [7.7 mm] |

Click the following link (or enter part number in “SEARCH” on website) to obtain additional part information including price, inventory and certifications: Low Loss 1/4 Superflexible Helical Corrugated Coax Cable with Black PE Jacket PE-1/4SFHC

Pasternack Enterprises, Inc. • P.O. Box 16759, Irvine, CA 92623
**Phone:** (866) 727-8376 or (949) 261-1920 • **Fax:** (949) 261-7451
Sales@Pasternack.com • Techsupport@Pasternack.com

© 2020 Pasternack Enterprises All Rights Reserved

# Low Loss 1/4 Superflexible Helical Corrugated Coax Cable with Black PE Jacket



## Environmental Specifications

**Temperature**

| | |
|---|---|
| Operating Range | -55 to +85 deg C |

## Compliance Certifications (see product page for current document)

## Plotted and Other Data

Notes:

Low Loss 1/4 Superflexible Helical Corrugated Coax Cable with Black PE Jacket from Pasternack Enterprises has same day shipment for domestic and International orders. Our RF, microwave and millimeter wave products maintain a 99.4% availability and are part of the broadest selection in the industry.

Click the following link (or enter part number in “SEARCH” on website) to obtain additional part information including price, inventory and certifications: Low Loss 1/4 Superflexible Helical Corrugated Coax Cable with Black PE Jacket PE-1/4SFHC

URL: https://www.pasternack.com/50-ohm-low-loss-corrugated-1-4-superflexible-helical-coax-pe-1-4sfhc-p.aspx

The information contained in this document is accurate to the best of our knowledge and representative of the part described herein. It may be necessary to make modifications to the part and/or the documentation of the part, in order to implement improvements. Pasternack reserves the right to make such changes as required. Unless otherwise stated, all specifications are nominal. Pasternack does not make any representation or warranty regarding the suitability of the part described herein for any particular purpose, and Pasternack does not assume any liability arising out of the use of any part or documentation.

Pasternack Enterprises, Inc. • P.O. Box 16759, Irvine, CA 92623
**Phone:** (866) 727-8376 or (949) 261-1920 • **Fax:** (949) 261-7451
Sales@Pasternack.com • Techsupport@Pasternack.com

© 2020 Pasternack Enterprises All Rights Reserved

# PE-1/4SFHC CAD Drawing

Low Loss 1/4 Superflexible Helical Corrugated Coax Cable with Black PE Jacket

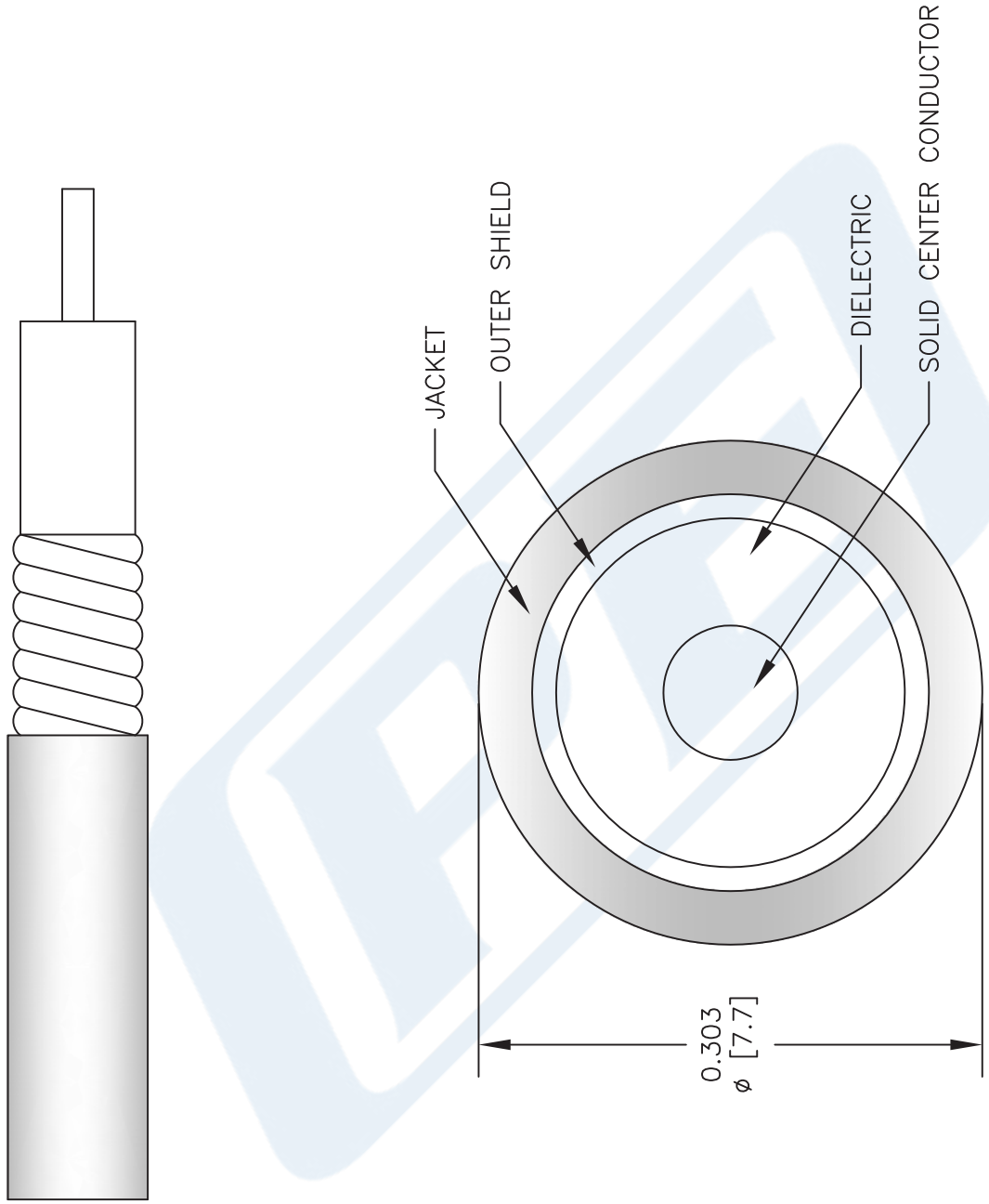


NOTES:
1. UNLESS OTHERWISE SPECIFIED ALL DIMENSIONS ARE NOMINAL.
2. ALL SPECIFICATIONS ARE SUBJECT TO CHANGE WITHOUT NOTICE AT ANY TIME.
3. DIMENSIONS ARE IN INCHES [mm].

DWG TITLE
PE-1/4SFHC

FSCM NO. 53919

CAD FILE 092112 | SCALE N/A | SIZE A | 2233

PASTERNACK®
Pasternack Enterprises, Inc.
P.O. Box 16759 | Irvine | CA | 92623
**Phone:** (949) 261-1920 | **Fax:** (949) 261-7451
**Website:** www.pasternack.com | **E-Mail:** sales@pasternack.com

© 2020 Pasternack Enterprises All Rights Reserved