PASTERNACK®
www.pasternack.com

FME Jack Connector Crimp/Solder Attachment For RG174, RG316, RG188

TECHNICAL DATA SHEET PE44148

FME Jack Connector Crimp/Solder Attachment For RG174, RG316, RG188

Configuration

Connector	FME Jack
Connector Interface Type	RG174,RG316,RG188
Cable Attachment Method (Shield/Contact)	Crimp/Solder
Body Style	Straight

Electrical Specifications

Impedance, Ohms	50

Mechanical Specifications

Size

Length, in [mm]	1.28 [32.51]
Width/Dia., in [mm]	0.312 [7.92]
Weight, lbs [g]	0.013 [5.9]

Connector

Type	FME Jack
Contact Material and Plating	Brass, Gold
Body Material and Plating	Brass, Nickel
Dielectric Type	PTFE

Compliance Certifications (visit www.Pasternack.com for current document)

RoHS Compliant	Yes

Plotted and Other Data

Notes:	Values at 25 °C, sea level

FME Jack Connector Crimp/Solder Attachment For RG174, RG316, RG188 from Pasternack Enterprises has same day shipment for domestic and International orders. Our RF, microwave and fiber optic products maintain a 99% availability and are part of the broadest selection in the industry.

Click the following link (or enter part number in “SEARCH” on website) to obtain additional part information including price, inventory and certifications: FME Jack Connector Crimp/Solder Attachment For RG174, RG316, RG188 PE44148

URL: http://www.pasternack.com/fme-jack-standard-rg174-rg316-rg188-connector-pe44148-p.aspx

The information contained in this document is accurate to the best of our knowledge and representative of the part described herein. It may be necessary to make modifications to the part and/or the documentation of the part, in order to implement improvements. Pasternack reserves the right to make such changes as required. Unless otherwise stated, all specifications are nominal.

Pasternack Enterprises, Inc. • P.O. Box 16759, Irvine, CA 92623
Phone: (866) 727-8376 or (949) 261-1920 • **Fax:** (949) 261-7451
Sales@Pasternack.com • Techsupport@Pasternack.com

© 2013 Pasternack Enterprises All Rights Reserved

PE44148 CAD Drawing

FME Jack Connector Crimp/Solder Attachment For RG174, RG316, RG188

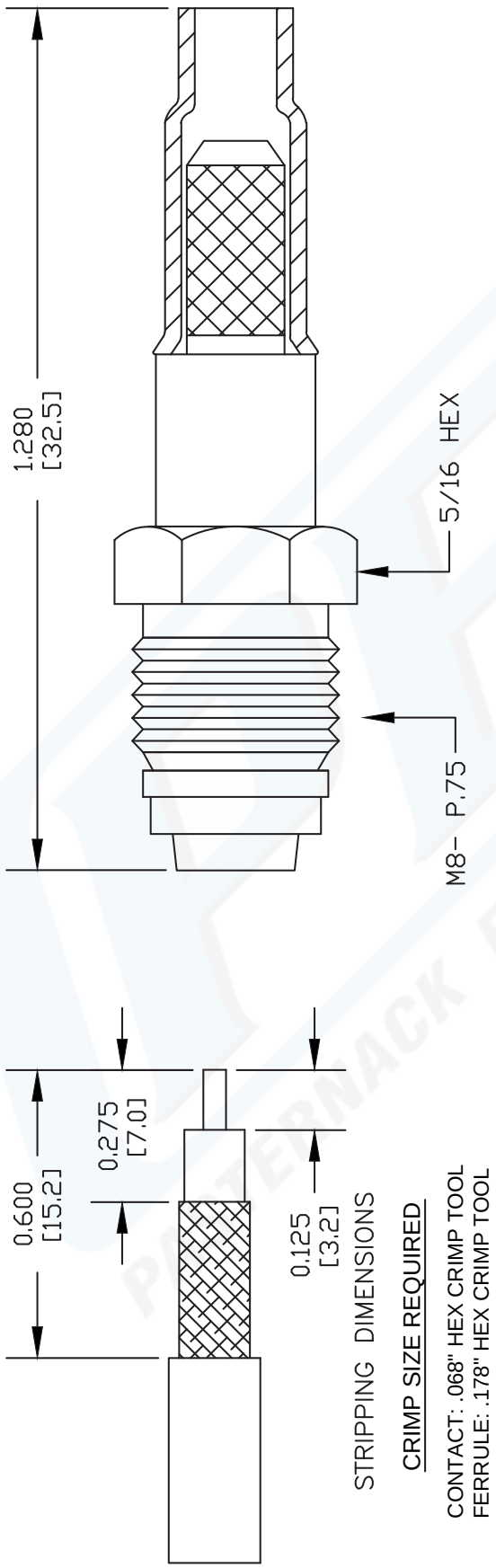

NOTES:
1. UNLESS OTHERWISE SPECIFIED ALL DIMENSIONS ARE NOMINAL.
2. ALL SPECIFICATIONS ARE SUBJECT TO CHANGE WITHOUT NOTICE AT ANY TIME.
3. DIMENSIONS ARE IN INCHES [mm].
4. FITS MIL-C-17 AND EQUIVALENT CABLES.

DWG TITLE
PE44148

FSCM NO. 53919

CAD FILE 062702 | SCALE N/A | SIZE A | XXXX

PASTERNACK®
Pasternack Enterprises, Inc.
P.O. Box 16759 | Irvine | CA | 92623
Phone: (949) 261-1920 | **Fax:** (949) 261-7451
Website: www.pasternack.com | **E-Mail:** sales@pasternack.com

© 2013 Pasternack Enterprises All Rights Reserved

SMA Male Connector Crimp/Solder Attachment for RG174, RG316, RG188, LMR-100, PE-B100, PE-C100, .100 inch

PE4003

Configuration

- SMA Male Connector
- MIL-STD-348A
- 50 Ohms
- Straight Body Geometry
- Connector Interface Types: RG174, RG316, RG188, LMR-100, PE-B100, PE-C100, .100 inch
- 5/16 inch Hex

Features

- Max. Operating Frequency 12.4 GHz
- Excellent VSWR of 1.21:1
- Gold Plated Brass Contact
- 30 µin minimum contact plating

Applications

- General Purpose Test
- Custom Cable Assemblies

Description

Pasternack's PE4003 , SMA, Standard, Connector is part of our full line of RF components available for same-day shipping. Our SMA male connector operates up to a maximum frequency of 12.4 GHz and offers excellent VSWR of 1.21:1.

Our SMA male connector PE4003 datasheet specifications and drawing with dimensions are shown below in this PDF. Pasternack's broad catalog of RF, microwave and millimeter wave connectors allows designers to configure and customize their signal connections however they like. Whether the need is to provide an I/O for a board design, or simply create a custom cable assembly configuration, Pasternack has the right connector for the job. Pasternack can also expertly build your custom cable assemblies for you and ship same-day.

Electrical Specifications

Description	Minimum	Typical	Maximum	Units
Frequency Range	DC		12.4	GHz
VSWR			1.21:1	
Operating Voltage (AC)			335	Vrms
Impedance		50		Ohms

Mechanical Specifications

Size	
Length	0.87 in [22.1 mm]
Width	0.315 in [8.00 mm]
Height	4.2 in [106.68 mm]
Weight	0.012 lbs [5.44 g]
Mating Cycles	500 Cycles
Mating Torque	3 to 5 in-lbs [[0.34 to 0.57 Nm]]

© 2023 Infinite Electronics, Inc. Pasternack is a registered trademark of Infinite Electronics, Inc.
+1 (866) 558-2786 | sales@pasternack.com | pasternack.com

SMA Male Connector Crimp/Solder Attachment for RG174, RG316, RG188, LMR-100, PE-B100, PE-C100, .100 inch

PE4003

Material Specifications

Description	Material	Plating
Contact	Brass	Gold 30 µin minimum
Insulation	PTFE	
Body	Brass	Nickel 100 µin minimum
Coupling Nut	Brass	Nickel 100 µin minimum
Crimp Sleeve	Brass	Nickel

Environmental Specifications

Temperature

Operating Range	-65 to +165 deg C

Compliance Certifications (see product page for current document)

Plotted and Other Data

Notes:

SMA Male Connector Crimp/Solder Attachment for RG174, RG316, RG188, LMR-100, PE-B100, PE-C100, .100 inch from Pasternack Enterprises has same day shipment for domestic and International orders. Our RF, microwave and millimeter wave products maintain a 99.4% availability and are part of the broadest selection in the industry.

Click the following link (or enter part number in "SEARCH" on website) to obtain additional part information including price, inventory and certifications: SMA Male Connector Crimp/Solder Attachment for RG174, RG316, RG188, LMR-100, PE-B100, PE-C100, .100 inch PE4003

URL: https://www.pasternack.com/sma-male-rg174-rg316-lmr-100-pe-b100-pe-c100-connector-pe4003-p.aspx

The information contained within this document is accurate to the best of our knowledge and representative of the part described herein. It may be necessary to make modifications to the part and/or the documentation of the part in order to impliment improvements. Pasternack Enterprises reserves the right to make such changes as required. Unless otherwise stated, all specifications are nominal. Pasternack Enterprises does not make any representation or warranty regarding the suitability of the part described herein for any particular purpose, and Pasternack Enterprises does not assume liability arising out of the use of any part or document.

© 2023 Infinite Electronics, Inc. Pasternack is a registered trademark of Infinite Electronics, Inc.

PE4003 CAD Drawing

SMA Male Connector Crimp/Solder Attachment for RG174, RG316, RG188, LMR-100, PE-B100, PE-C100, .100 inch

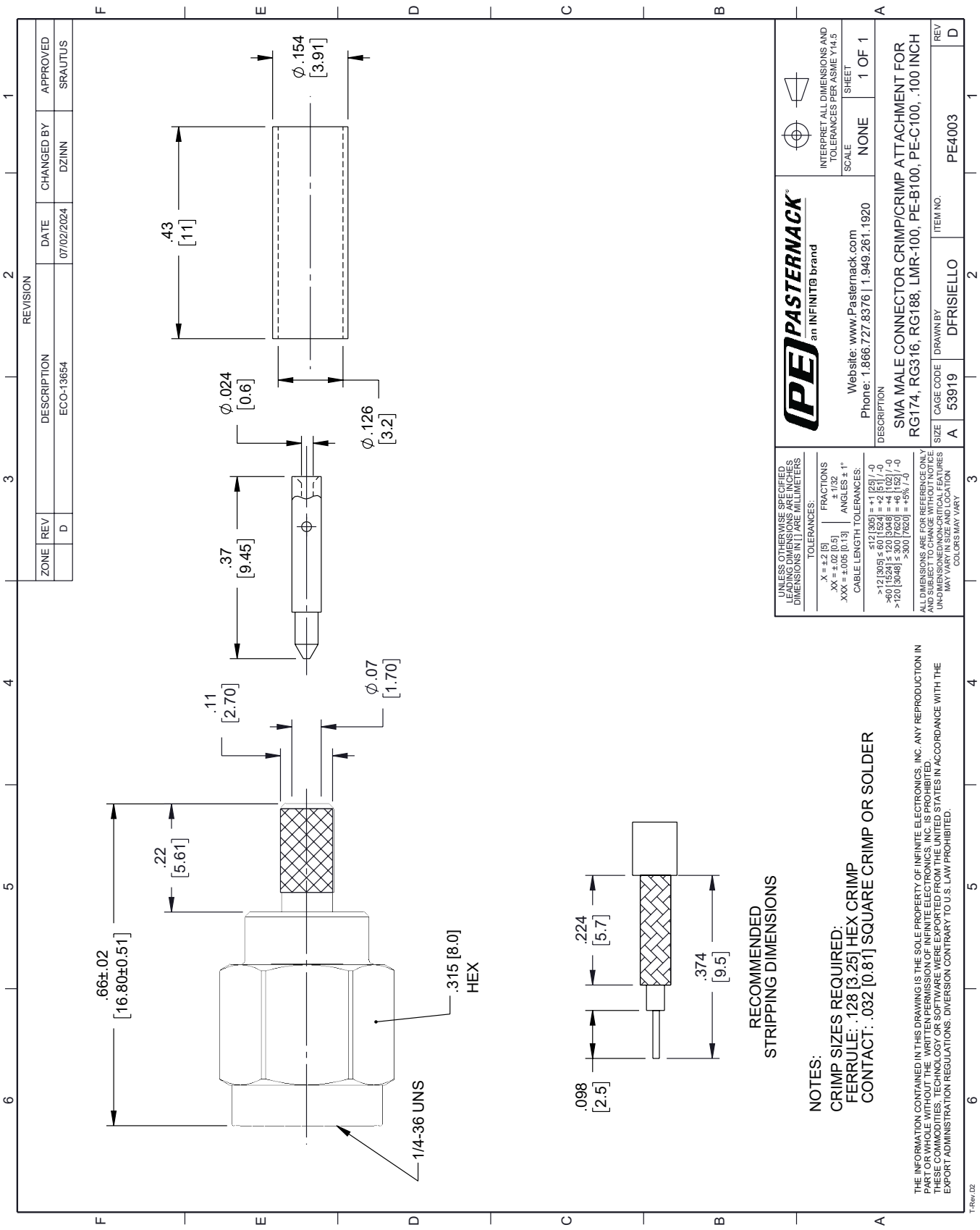

© 2023 Infinite Electronics, Inc. Pasternack is a registered trademark of Infinite Electronics, Inc.

Low Loss Flexible LMR-100A-PVC Indoor/Outdoor Rated Coax Cable Double Shielded with Black PVC Jacket

LMR-100A-PVC

TIMES MICROWAVE SYSTEMS

Times Microwave Systems Connector Specification

Configuration

- Low Loss, Indoor/Outdoor Flexible Cable
- 2 Shield(s)

Features

- Max Operating Frequency of 8 GHz
- Low Loss Cable
- Phase Velocity 66% VoP

Applications

- Laboratory Applications
- General Purpose RF Interconnect

Description

LMR-100A-PVC part number from Pasternack is a LMR-100A-PVC coax cable that is flexible. Pasternack LMR-100A flexible coax cable is 50 Ohm and has a PE dielectric. Our LMR-100A coax is constructed with a 0.11 jacket made of PVC. LMR-100A coax has a shield count of 2, a RF shielding of 90 dB and the maximum frequency for this Pasternack cable is 8 GHz. LMR-100A coax cable has an attenuation at 1 GHz of 24 dB.

Pasternack LMR-100A-PVC coax cables are part of over 40,000 RF, microwave and millimeter wave components. LMR-100A cables and our other RF parts are available for same day shipping worldwide. Custom RF cable assemblies using LMR-100A or other coax can be built and shipped same day as well.

Electrical Specifications

Description	Minimum	Typical	Maximum	Units
Frequency Range	DC		8	GHz
Cutoff Frequency		90		GHz
Impedance		50		Ohms
Velocity of Propagation		66		%
Time Delay		1.54 [5.05]		ns/ft [ns/m]
Shielding Effectiveness	90			dB
Dielectric Withstanding Voltage (DC)			500	Vdc
Jacket Spark			2,000	Vrms
Inner Conductor DC Resistance			81	Ohms/1000ft
Outer Conductor DC Resistance			9.5	Ohms/1000ft
Nominal Capacitance		30.8 [101.05]		pF/ft [pF/m]
Nominal Inductance		0.077 [0.25]		uH/ft [uH/m]
Input Power (Peak)			600	Watts

© 2023 Infinite Electronics, Inc. Pasternack is a registered trademark of Infinite Electronics, Inc.
+1 (866) 558-2786 | sales@pasternack.com | pasternack.com

Low Loss Flexible LMR-100A-PVC Indoor/Outdoor Rated Coax Cable Double Shielded with Black PVC Jacket

LMR-100A-PVC

Performance by Frequency Band

Description	F1	F2	F3	F4	F5	Units
Frequency	50	150	220	450	900	MHz
Attenuation, Typ	3.9	8.9	10.9	15.8	22.8	dB/100ft
	12.8	29.2	35.76	51.84	74.8	dB/100m
Input Power (CW), Max	230	100	83	57	39	Watts

Description	F6	F7	F8	F9	F10	Units
Frequency	1.5	1.8	2	2.5	5.8	GHz
Attenuation, Typ	30.1	33.2	35.2	39.8	64.1	dB/100ft
	98.75	108.92	115.49	130.58	210.3	dB/100m
Input Power (CW), Max	29	27	25	22	13	Watts

Mechanical Specifications

Diameter	0.11 in [2.79 mm}
Weight	0.009 lbs/ft [0.01 kg/m]
Min. Bend Radius (Installation)	0.25 in [6.35 mm]
Min. Bend Radius (Repeated)	1 in [25.4 mm]
Bending Moment	0.1 lbs-ft [0.14 N-m]
Tensile Strength	15 lbs [6.8 kg]
Flat Plate Crush	10 lbs/in [0.18 kg/mm]

Construction Specifications

Description	Material and Plating	Diameter
Inner Conductor	Copper Clad Steel, 1 Strand	0.018 in [0.46 mm]
Conductor Type	Solid	
Dielectric	PE	0.06 in [1.52 mm]
First Shield	Aluminum Tape	
Second Shield	Tinned Copper Braid	
Jacket	PVC, Black	0.11 in [2.79 mm]

Environmental Specifications

Temperature

Operating Range	-40 to 85 deg C
Storage Range	-70 to 85 deg C

Compliance Certifications (see product page for current document)

Plotted and Other Data

Notes:

© 2023 Infinite Electronics, Inc. Pasternack is a registered trademark of Infinite Electronics, Inc.
+1 (866) 558-2786 | sales@pasternack.com | pasternack.com

Low Loss Flexible LMR-100A-PVC Indoor/Outdoor Rated Coax Cable Double Shielded with Black PVC Jacket

LMR-100A-PVC

Low Loss Flexible LMR-100A-PVC Indoor/Outdoor Rated Coax Cable Double Shielded with Black PVC Jacket from Pasternack Enterprises has same day shipment for domestic and International orders. Our RF, microwave and millimeter wave products maintain a 99.4% availability and are part of the broadest selection in the industry.

Click the following link (or enter part number in "SEARCH" on website) to obtain additional part information including price, inventory and certifications: Low Loss Flexible LMR-100A-PVC Indoor/Outdoor Rated Coax Cable Double Shielded with Black PVC Jacket LMR-100A-PVC

URL: https://www.pasternack.com/50-ohm-low-loss-flexible-lmr-100apvc-jacket-double-shielded-lmr-100a-pvc-p.aspx

The information contained within this document is accurate to the best of our knowledge and representative of the part described herein. It may be necessary to make modifications to the part and/or the documentation of the part in order to impliment improvements. Pasternack Enterprises reserves the right to make such changes as required. Unless otherwise stated, all specifications are nominal. Pasternack Enterprises does not make any representation or warranty regarding the suitability of the part described herein for any particular purpose, and Pasternack Enterprises does not assume liability arising out of the use of any part or document.

© 2023 Infinite Electronics, Inc. Pasternack is a registered trademark of Infinite Electronics, Inc.

LMR-100A-PVC CAD Drawing

Low Loss Flexible LMR-100A-PVC Indoor/Outdoor Rated Coax Cable Double Shielded with Black PVC Jacket

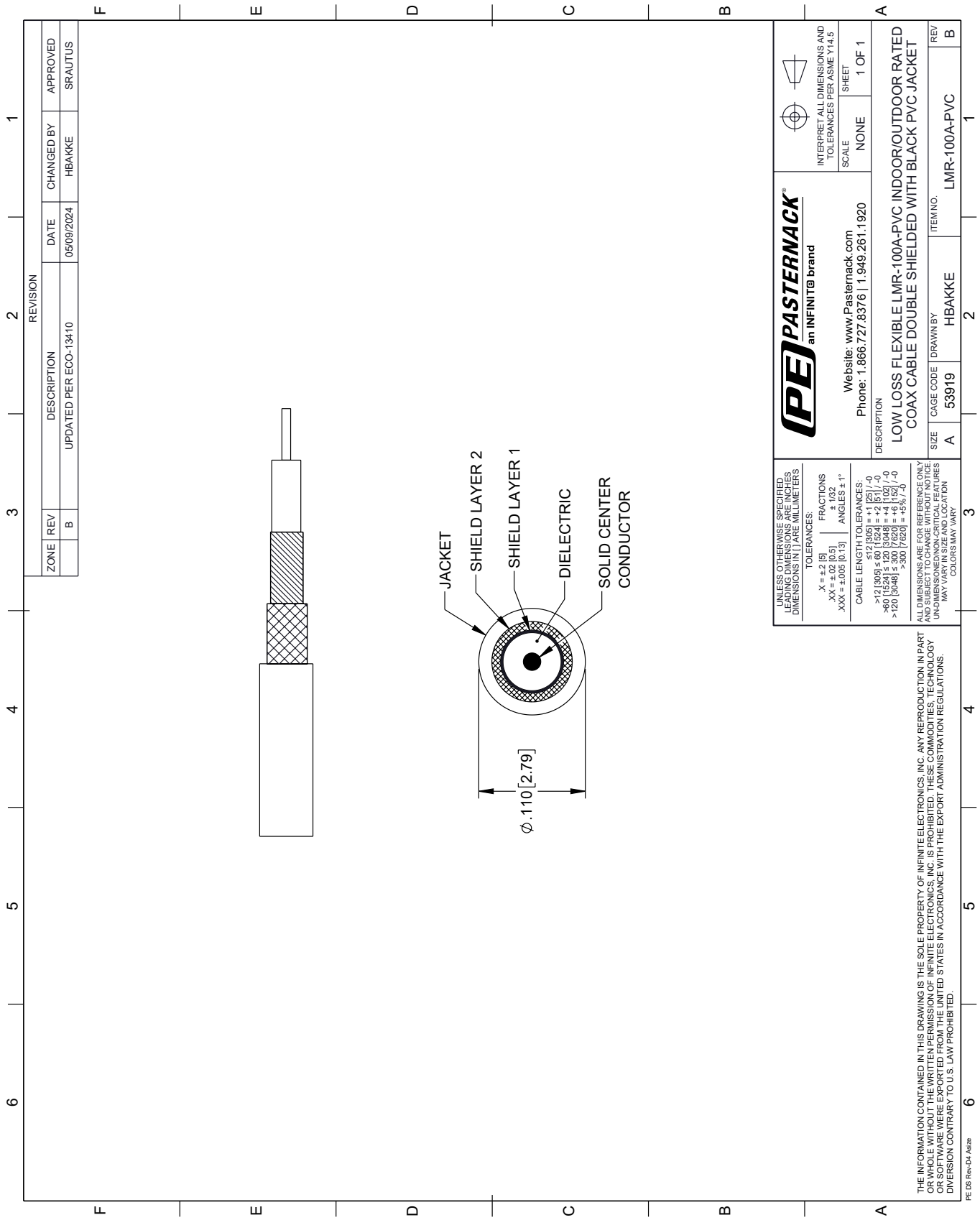

© 2023 Infinite Electronics, Inc. Pasternack is a registered trademark of Infinite Electronics, Inc.