FAKRA Jack Connector Crimp/Solder Attachment for RG174, RG316, RG188, .100 inch, PE-B100, PE-C100, LMR-100, Black Color

RF Connectors Technical Data Sheet PE44646A

Configuration

- FAKRA Jack Connector
- 50 Ohms
- Straight Body Geometry
- RG174, RG316, RG188, .100 inch, PE-B100, PE-C100, LMR-100 Interface Type
- Crimp/Solder Attachment

Features

- Max. Operating Frequency 4 GHz
- Good VSWR of 1.3:1
- Gold Plated Phosphor Bronze Contact

Applications

- General Purpose Test
- Custom Cable Assemblies

Description

Pasternack's PE44646A FAKRA jack connector with crimp/solder attachment for RG174, RG316, RG188, .100 inch, PE-B100, PE-C100 and LMR-100 is part of our full line of RF components available for same-day shipping. Our FAKRA jack connector operates up to a maximum frequency of 4 GHz and offers good VSWR of 1.3:1.

Our FAKRA jack connector PE44646A datasheet specifications and drawing with dimensions are shown below in this PDF. Pasternack's broad catalog of RF, microwave and millimeter wave connectors allows designers to configure and customize their signal connections however they like. Whether the need is to provide an I/O for a board design, or simply create a custom cable assembly configuration, Pasternack has the right connector for the job. Pasternack can also expertly build your custom cable assemblies for you and ship same-day.

Electrical Specifications

Description	Minimum	Typical	Maximum	Units
Frequency Range	DC		4	GHz
VSWR			1.3:1	
Operating Voltage (AC)			335	Vrms
Dielectric Withstanding Voltage (AC)			1,000	Vrms
Inner Conductor DC Resistance			6	mOhms
Outer Conductor DC Resistance			2.5	mOhms
Insulation Resistance	1,000			MOhms

Mechanical Specifications

Size	
Length	0.038 in [0.97 mm]
Width/Dia.	0.37 in [9.40 mm]
Height	0.54 in [13.72 mm]
Weight	0.008 lbs [3.63 g]

Click the following link (or enter part number in "SEARCH" on website) to obtain additional part information including price, inventory and certifications: FAKRA Jack Connector Crimp/Solder Attachment for RG174, RG316, RG188, .100 inch, PE-B100, PE-C100, LMR-100, Black Color PE44646A

Pasternack Enterprises, Inc. • P.O. Box 16759, Irvine, CA 92623
Phone: (866) 727-8376 or (949) 261-1920 • **Fax:** (949) 261-7451
Sales@Pasternack.com • Techsupport@Pasternack.com

© 2017 Pasternack Enterprises All Rights Reserved

FAKRA Jack Connector Crimp/Solder Attachment for RG174, RG316, RG188, .100 inch, PE-B100, PE-C100, LMR-100, Black Color

Material Specifications

Description	Material	Plating
Contact	Phosphor Bronze	Gold
Insulation	PTFE	
Outer Conductor	Brass	Nickel
Body	Plastic	

Environmental Specifications

Temperature

Operating Range -40 to +85 deg C

Compliance Certifications (see product page for current document)

Plotted and Other Data

Notes:

FAKRA Jack Connector Crimp/Solder Attachment for RG174, RG316, RG188, .100 inch, PE-B100, PE-C100, LMR-100, Black Color from Pasternack Enterprises has same day shipment for domestic and International orders. Our RF, microwave and millimeter wave products maintain a 99.4% availability and are part of the broadest selection in the industry.

Click the following link (or enter part number in "SEARCH" on website) to obtain additional part information including price, inventory and certifications: FAKRA Jack Connector Crimp/Solder Attachment for RG174, RG316, RG188, .100 inch, PE-B100, PE-C100, LMR-100, Black Color PE44646A

URL: https://www.pasternack.com/fakra-jack-standard-pe-c100-rg174-rg316-connector-pe44646a-p.aspx

The information contained in this document is accurate to the best of our knowledge and representative of the part described herein. It may be necessary to make modifications to the part and/or the documentation of the part, in order to implement improvements. Pasternack reserves the right to make such changes as required. Unless otherwise stated, all specifications are nominal. Pasternack does not make any representation or warranty regarding the suitability of the part described herein for any particular purpose, and Pasternack does not assume any liability arising out of the use of any part or documentation.

Pasternack Enterprises, Inc. • P.O. Box 16759, Irvine, CA 92623
Phone: (866) 727-8376 or (949) 261-1920 • **Fax:** (949) 261-7451
Sales@Pasternack.com • Techsupport@Pasternack.com

© 2017 Pasternack Enterprises All Rights Reserved

PE44646A CAD Drawing

FAKRA Jack Connector Crimp/Solder Attachment for RG174, RG316, RG188, .100 inch, PE-B100, PE-C100, LMR-100, Black Color

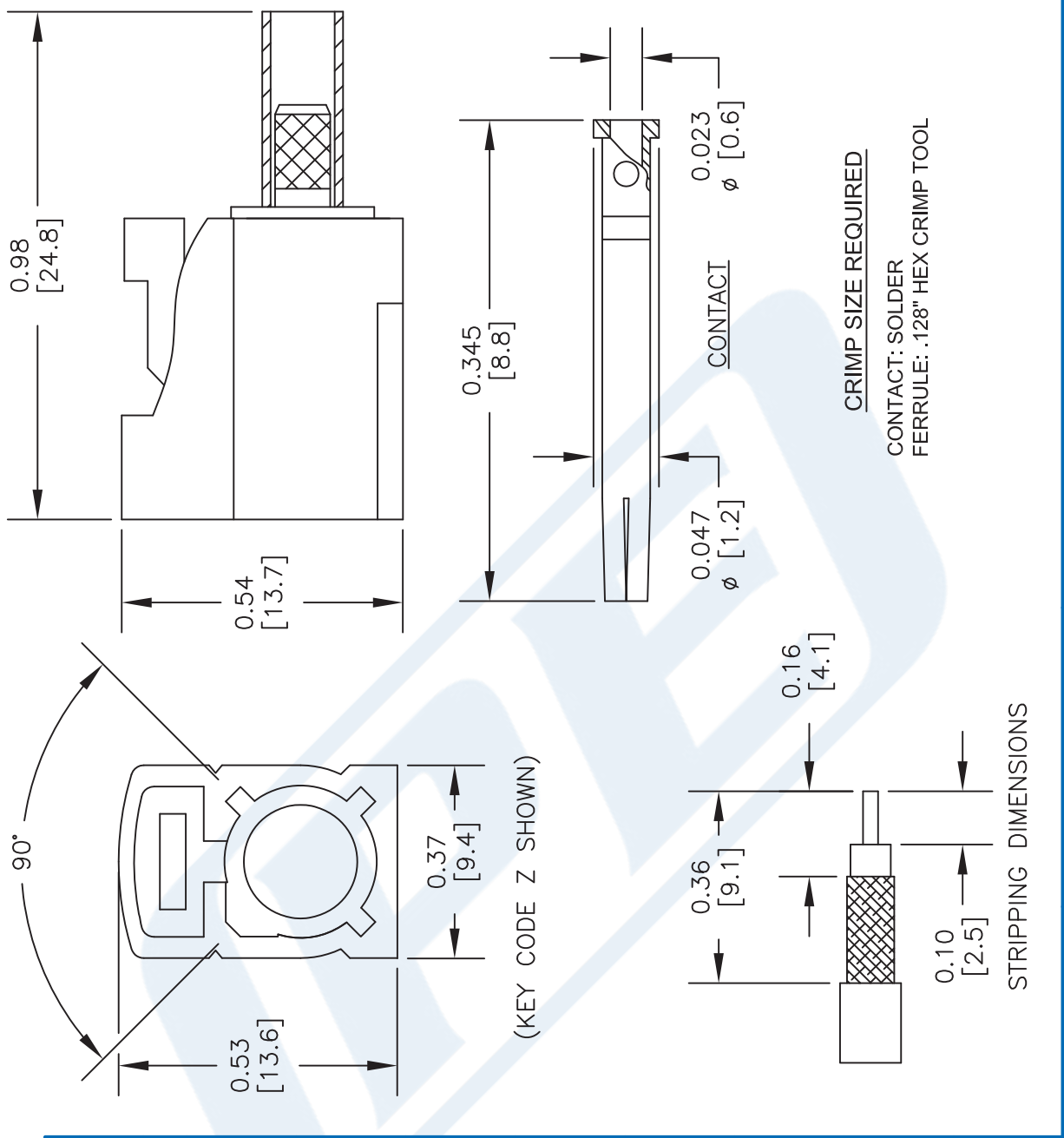

NOTES:
1. UNLESS OTHERWISE SPECIFIED ALL DIMENSIONS ARE NOMINAL.
2. ALL SPECIFICATIONS ARE SUBJECT TO CHANGE WITHOUT NOTICE AT ANY TIME.
3. DIMENSIONS ARE IN INCHES [mm].

DWG TITLE **PE44646/Y**

CAGE CODE 53919

CAD FILE 041017 | SCALE N/A | SIZE A | 2233

Part Configurator

1. Replace Y with code.

CODING	JACK	COLOR	APPLICATION
A		BLACK	RADIO WITH PHANTOM SUPPLY
B		WHITE	RADIO WITHOUT PHANTOM SUPPLY
C		BLUE	GPS: TELEMATICS OR NAVIGATION
D		BORDEAUX	GSM: CELLULAR PHONE
H		VIOLET	GPS: TELEMATICS AND NAVIGATION
I		BEIGE	BLUETOOTH
K		CURRY	RADIO WITH IF OUTPUT (ANTENNA DIVERSITY)
Z		WATER BLUE	NEUTRAL CODING

PASTERNACK® THE ENGINEER'S RF SOURCE
Pasternack Enterprises, Inc.
P.O. Box 16759 | Irvine | CA | 92623
Phone: (949) 261-1920 | **Fax:** (949) 261-7451
Website: www.pasternack.com | **E-Mail:** sales@pasternack.com

© 2017 Pasternack Enterprises All Rights Reserved

PASTERNACK®
THE ENGINEER'S RF SOURCE

SMP Female Right Angle Push-On Connector Crimp/ Solder Attachment for RG316, RG174, LMR-100

Configuration

- Push-On SMP Female Connector
- MIL-STD-348A
- 50 Ohms
- Right Angle Body Geometry
- RG316, RG174, LMR-100 Interface Type
- Crimp/Solder Attachment

Electrical Specifications

Description	Minimum	Typical	Maximum	Units
Frequency Range	DC		3	GHz
VSWR			1.3:1	
Operating Voltage (AC)			350	Vrms

Mechanical Specifications

Size

Length	0.295 in [7.49 mm]
Width/Dia.	0.157 in [3.99 mm]
Height	0.311 in [7.9 mm]
Weight	0.00736 lbs [3.34 g]

Material Specifications

Description	Material	Plating
Contact	Beryllium Copper	Gold 30µ in. minimum
Insulation	Teflon	
Outer Conductor	Beryllium Copper	Gold 3µ in. minimum
Body	Brass	Gold 3µ in. minimum

Environmental Specifications

Temperature

Operating Range	-65 to 165 deg C

Click the following link (or enter part number in "SEARCH" on website) to obtain additional part information including price, inventory and certifications: SMP Female Right Angle Push-On Connector Crimp/Solder Attachment for RG316, RG174, LMR-100 PE45128

Pasternack Enterprises, Inc. • P.O. Box 16759, Irvine, CA 92623
Phone: (866) 727-8376 or (949) 261-1920 • **Fax:** (949) 261-7451
Sales@Pasternack.com • Techsupport@Pasternack.com

© 2016 Pasternack Enterprises All Rights Reserved

SMP Female Right Angle Push-On Connector Crimp/ Solder Attachment for RG316, RG174, LMR-100

Compliance Certifications (see product page for current document)

Plotted and Other Data

Notes:

SMP Female Right Angle Push-On Connector Crimp/Solder Attachment for RG316, RG174, LMR-100 from Pasternack Enterprises has same day shipment for domestic and International orders. Our RF, microwave and millimeter wave products maintain a 99% availability and are part of the broadest selection in the industry.

Click the following link (or enter part number in "SEARCH" on website) to obtain additional part information including price, inventory and certifications: SMP Female Right Angle Push-On Connector Crimp/Solder Attachment for RG316, RG174, LMR-100 PE45128

URL: https://www.pasternack.com/smp-female-push-on-rg316-rg174-lmr-100-connector-pe45128-p.aspx

The information contained in this document is accurate to the best of our knowledge and representative of the part described herein. It may be necessary to make modifications to the part and/or the documentation of the part, in order to implement improvements. Pasternack reserves the right to make such changes as required. Unless otherwise stated, all specifications are nominal. Pasternack does not make any representation or warranty regarding the suitability of the part described herein for any particular purpose, and Pasternack does not assume any liability arising out of the use of any part or documentation.

Pasternack Enterprises, Inc. • P.O. Box 16759, Irvine, CA 92623
Phone: (866) 727-8376 or (949) 261-1920 • **Fax:** (949) 261-7451
Sales@Pasternack.com • Techsupport@Pasternack.com

© 2016 Pasternack Enterprises All Rights Reserved

PE45128 CAD Drawing

SMP Female Right Angle Push-On Connector Crimp/
Solder Attachment for RG316, RG174, LMR-100

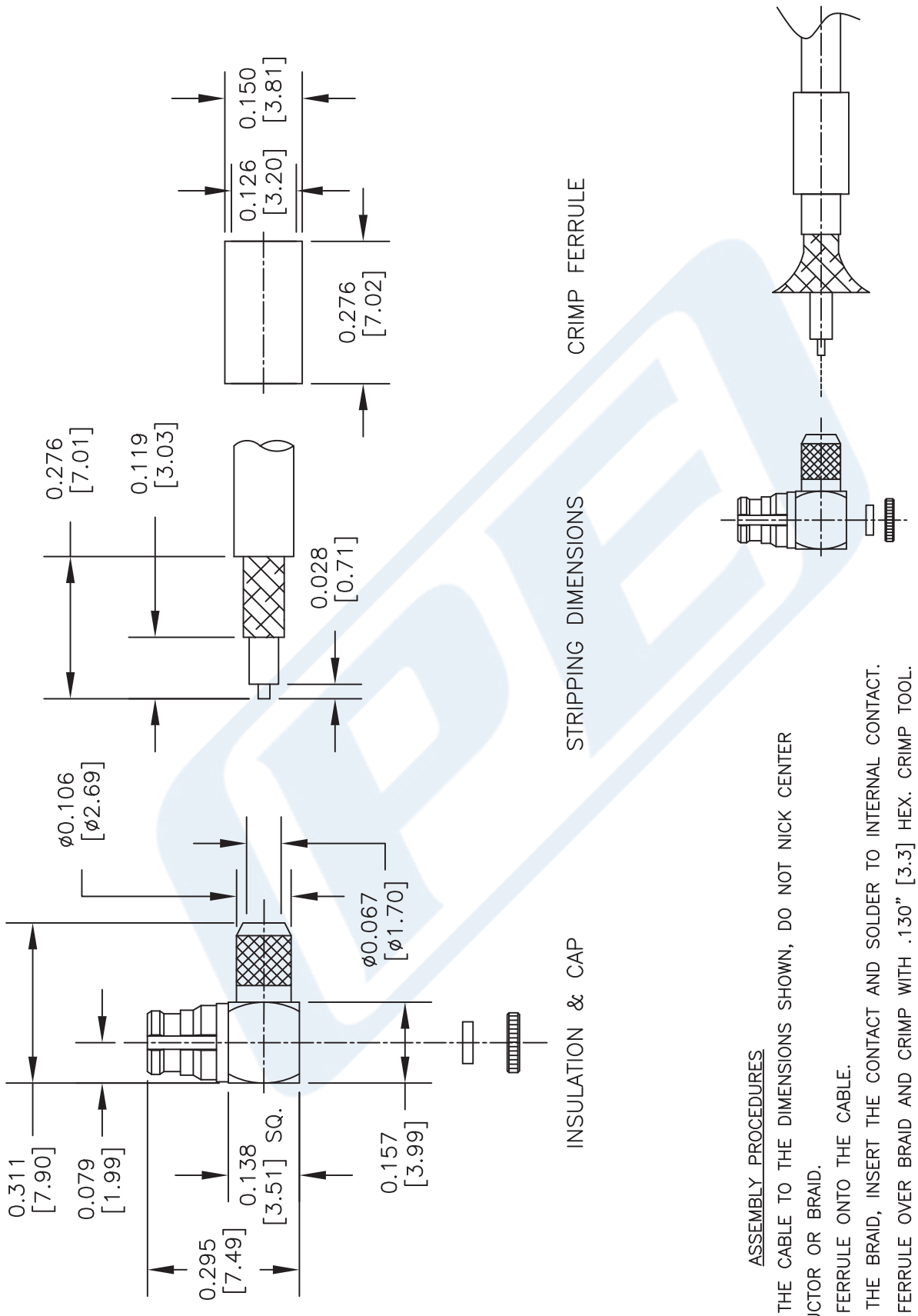

ASSEMBLY PROCEDURES

1. STRIP THE CABLE TO THE DIMENSIONS SHOWN, DO NOT NICK CENTER CONDUCTOR OR BRAID.
2. SLIDE FERRULE ONTO THE CABLE.
3. FLARE THE BRAID, INSERT THE CONTACT AND SOLDER TO INTERNAL CONTACT.
4. SLIDE FERRULE OVER BRAID AND CRIMP WITH .130" [3.3] HEX. CRIMP TOOL.
5. INSERT THE INSULATION AND THE CAP.

NOTES:
1. UNLESS OTHERWISE SPECIFIED ALL DIMENSIONS ARE NOMINAL.
2. ALL SPECIFICATIONS ARE SUBJECT TO CHANGE WITHOUT NOTICE AT ANY TIME.
3. DIMENSIONS ARE IN INCHES [mm].

DWG TITLE
PE45128

FSCM NO. 53919

CAD FILE 021015 | SCALE N/A | SIZE A | 200

PASTERNACK® THE ENGINEER'S RF SOURCE
Pasternack Enterprises, Inc.
P.O. Box 16759 | Irvine | CA | 92623
Phone: (949) 261-1920 | **Fax:** (949) 261-7451
Website: www.pasternack.com | **E-Mail:** sales@pasternack.com

© 2016 Pasternack Enterprises All Rights Reserved

PASTERNACK
an INFINITE brand

Flexible RG174 Coax Cable Single Shielded with Black PVC Jacket

RF Cables
Technical Data Sheet

TIMES MICROWAVE SYSTEMS An Amphenol Company

RG174A/U

Times Microwave Systems Coax Cable Specification

Configuration

- Flexible Cable
- 1 Shield(s)

Electrical Specifications

Description	Minimum	Typical	Maximum	Units
Frequency Range	DC		1,000	MHz
Impedance		50		Ohms
Velocity of Propagation		66		%
Nominal Capacitance		31.08 [101.97]		pF/ft [pF/m]
Power@ 1GHz			17	Watts

Performance by Frequency Band

Description	F1	F2	F3	F4	F5	Units
Frequency	100	400	1,000			MHz
Attenuation, Typ	8.4	19	32			dB/100ft
	27.56	62.34	104.99			dB/100m

Mechanical Specifications

Diameter	0.11 in [2.79 mm}
Weight	0.009 lbs/ft [0.01 kg/m]

Construction Specifications

Description	Material and Plating	Diameter
Inner Conductor	Copper Clad Steel, 7 Strands	0.019 in [0.48 mm]
Conductor Type	Stranded	
Dielectric	PE	0.06 in [1.52 mm]
First Shield	Tinned Copper Braid	0.078 in [1.98 mm]

Click the following link (or enter part number in “SEARCH” on website) to obtain additional part information including price, inventory and certifications: Flexible RG174 Coax Cable Single Shielded with Black PVC Jacket RG174A/U

Pasternack Enterprises, Inc. • P.O. Box 16759, Irvine, CA 92623
Phone: (866) 727-8376 or (949) 261-1920 • **Fax:** (949) 261-7451
Sales@Pasternack.com • Techsupport@Pasternack.com

© 2020 Pasternack Enterprises All Rights Reserved

Flexible RG174 Coax Cable Single Shielded with Black PVC Jacket

Jacket	PVC, Black	0.11 in [2.79 mm]

Environmental Specifications

Temperature

Operating Range	-40 to +80 deg C

Compliance Certifications (see product page for current document)

Plotted and Other Data

Notes:

Flexible RG174 Coax Cable Single Shielded with Black PVC Jacket from Pasternack Enterprises has same day shipment for domestic and International orders. Our RF, microwave and millimeter wave products maintain a 99.4% availability and are part of the broadest selection in the industry.

Click the following link (or enter part number in “SEARCH” on website) to obtain additional part information including price, inventory and certifications: Flexible RG174 Coax Cable Single Shielded with Black PVC Jacket RG174A/U

URL: https://www.pasternack.com/flexible-0.100-rg174-50-ohm-coax-cable-pvc-jacket-rg174a-u-p.aspx

The information contained in this document is accurate to the best of our knowledge and representative of the part described herein. It may be necessary to make modifications to the part and/or the documentation of the part, in order to implement improvements. Pasternack reserves the right to make such changes as required. Unless otherwise stated, all specifications are nominal. Pasternack does not make any representation or warranty regarding the suitability of the part described herein for any particular purpose, and Pasternack does not assume any liability arising out of the use of any part or documentation.

Pasternack Enterprises, Inc. • P.O. Box 16759, Irvine, CA 92623
Phone: (866) 727-8376 or (949) 261-1920 • **Fax:** (949) 261-7451
Sales@Pasternack.com • Techsupport@Pasternack.com

© 2020 Pasternack Enterprises All Rights Reserved

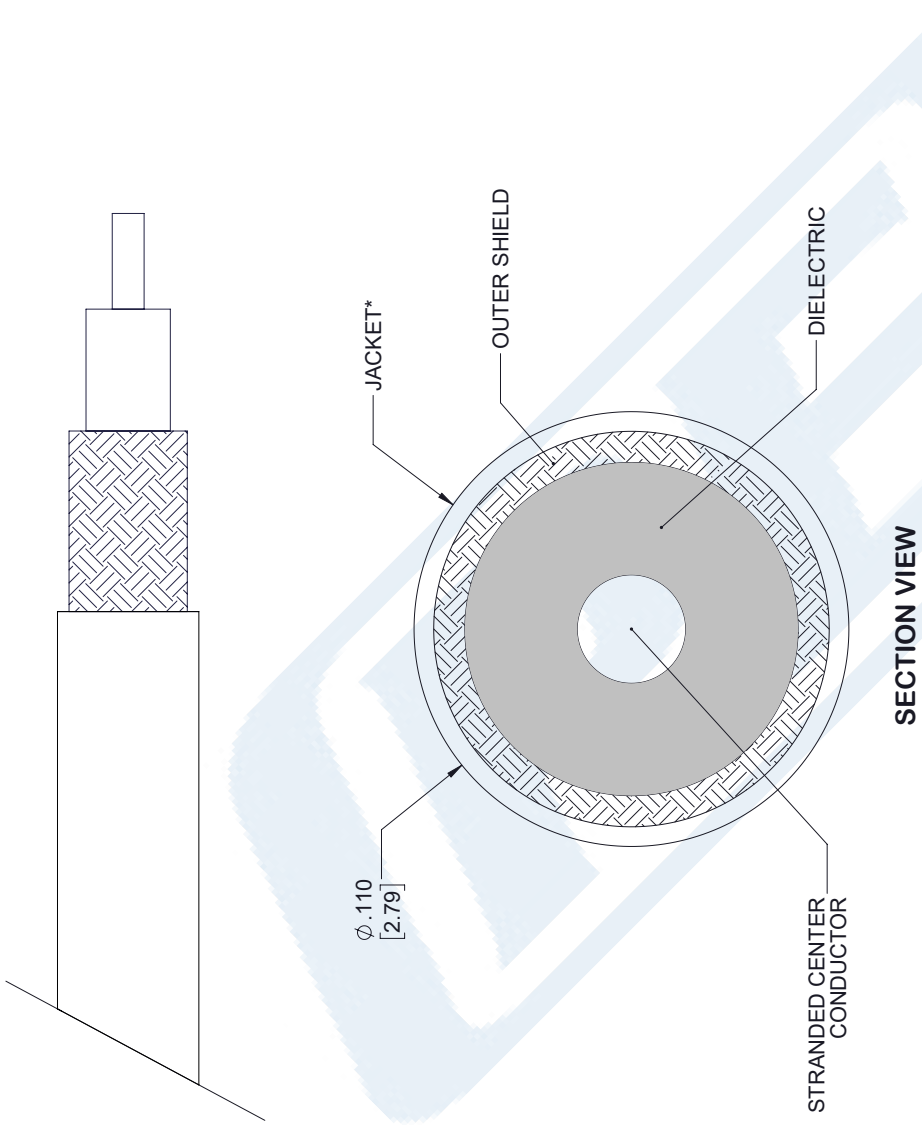

NOTE:
*STANDARD TOLERANCES APPLY ONLY TO DIMENSIONS IN INCHES

STANDARD TOLERANCES	
.X	±0.2
.XX	±0.01
.XXX	±0.005

NOTES:
1. UNLESS OTHERWISE SPECIFIED ALL DIMENSIONS ARE NOMINAL.
2. ALL SPECIFICATIONS ARE SUBJECT TO CHANGE WITHOUT NOTICE AT ANY TIME
3. DIMENSIONS ARE IN INCHES [mm].

DWG TITLE RG174A/U

CAD FILE 05/25/18 | SCALE N/A | SIZE A | 7361

CAGE CODE 53919

PASTERNACK® THE ENGINEER'S RF SOURCE
Pasternack Enterprises, Inc.
P.O. Box 16759 | Irvine | CA | 92623
Phone: (949) 261-1920 | **Fax:** (949) 261-7451
Website: www.pasternack.com | **E-Mail:** sales@pasternack.com

© 2020 Pasternack Enterprises All Rights Reserved