MATERIALS	
BODY	BRASS NICKEL PLATED
CONTACT	GOLD PLATED
INSULATOR	PTFE

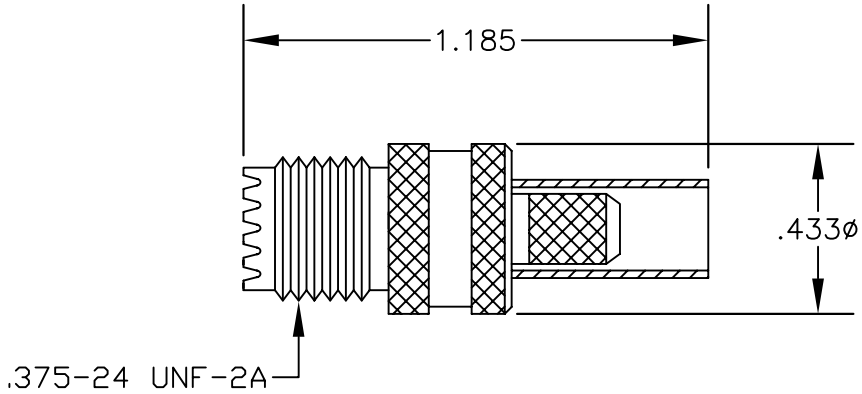

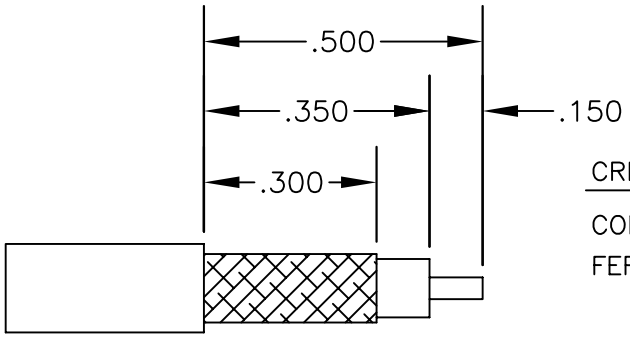

STRIPPING DIMENSIONS

CRIMP SIZES REQUIRED

CONTACT: .068" HEX CRIMP TOOL

FERRULE: .213" HEX CRIMP TOOL

PASTERNACK ENTERPRISES®
ESTABLISHED 1972

PASTERNACK ENTERPRISES, INC.
P.O BOX 16759, IRVINE, CA 92623
PHONE (949) 261-1920 FAX (949) 261-7451

WEB ADDRESS: www.pasternack.com
E-MAIL ADDRESS: sales@pasternack.com
COAXIAL & FIBER OPTICS

DWG TITLE
PE44083

DES. MINI UHF FEMALE, CRIMP ATTACHMENT FOR RG55, RG141, RG142, RG223 & RG400

SIZE A	FSCM NO. 53919	CAD FILE 062502	SCALE N/A		127

NOTES:
1. UNLESS OTHERWISE SPECIFIED ALL DIMENSIONS ARE NOMINAL.
2. ALL SPECIFICATIONS ARE SUBJECT TO CHANGE WITHOUT NOTICE AT ANY TIME.

PASTERNACK
an INFINITE brand

UHF Male Connector Clamp/Solder Attachment for RG58, RG55, RG141, RG142, RG223, RG400, RG303, PE-C195, PE-P195, LMR-195

RF Connectors
Technical Data Sheet

PE44052

Configuration

- UHF Male Connector
- 50 Ohms
- Straight Body Geometry
- Connector Interface Types: RG58, RG55, RG141, RG142, RG223, RG400, RG303, PE-C195, PE-P195, LMR-195

Features

- Max. Operating Frequency 300 MHz
- Gold Plated Brass Contact

Applications

- General Purpose Test
- Custom Cable Assemblies

Description

Pasternack's PE44052 UHF male connector with clamp/solder attachment for RG58, RG55, RG141, RG142, RG223, RG400, RG303, PE-C195, PE-P195 and LMR-195 is part of our full line of RF components available for same-day shipping. Our UHF male connector operates up to a maximum frequency of 300 MHz.

Our UHF male connector PE44052 datasheet specifications and drawing with dimensions are shown below in this PDF. Pasternack's broad catalog of RF, microwave and millimeter wave connectors allows designers to configure and customize their signal connections however they like. Whether the need is to provide an I/O for a board design, or simply create a custom cable assembly configuration, Pasternack has the right connector for the job. Pasternack can also expertly build your custom cable assemblies for you and ship same-day.

Electrical Specifications

Description	Minimum	Typical	Maximum	Units
Frequency Range	DC		300	MHz
Operating Voltage (AC)			500	Vrms
Dielectric Withstanding Voltage (AC)			1,500	Vrms

Mechanical Specifications

Size

Length	1.26 in [32 mm]
Width/Dia.	0.7 in [17.78 mm]
Weight	0.054 lbs [24.49 g]

Click the following link (or enter part number in "SEARCH" on website) to obtain additional part information including price, inventory and certifications: UHF Male Connector Clamp/Solder Attachment for RG58, RG55, RG141, RG142, RG223, RG400, RG303, PE-C195, PE-P195, LMR-195 PE44052

Pasternack Enterprises, Inc. • P.O. Box 16759, Irvine, CA 92623
Phone: (866) 727-8376 or (949) 261-1920 • **Fax:** (949) 261-7451
Sales@Pasternack.com • Techsupport@Pasternack.com

© 2020 Pasternack Enterprises All Rights Reserved

UHF Male Connector Clamp/Solder Attachment for RG58, RG55, RG141, RG142, RG223, RG400, RG303, PE-C195, PE-P195, LMR-195

Material Specifications

Description	Material	Plating
Contact	Brass	Gold
Insulation	PTFE	
Body	Brass	Nickel 100 µin minimum
Coupling Nut	Brass	Nickel 100 µin minimum

Mechanical Specification Notes:
When attaching the connector to the cable use a clamp torque value of 26 to 30 in-lbs [2.94 to 3.39 Nm]

Environmental Specifications

Temperature

Operating Range -55 to +85 deg C

Compliance Certifications (see product page for current document)

Plotted and Other Data

Notes:

UHF Male Connector Clamp/Solder Attachment for RG58, RG55, RG141, RG142, RG223, RG400, RG303, PE-C195, PE-P195, LMR-195 from Pasternack Enterprises has same day shipment for domestic and International orders. Our RF, microwave and millimeter wave products maintain a 99.4% availability and are part of the broadest selection in the industry.

Click the following link (or enter part number in “SEARCH” on website) to obtain additional part information including price, inventory and certifications: UHF Male Connector Clamp/Solder Attachment for RG58, RG55, RG141, RG142, RG223, RG400, RG303, PE-C195, PE-P195, LMR-195 PE44052

URL: https://www.pasternack.com/uhf-male-standard-rg58-rg55-rg141-rg142-rg223-rg400-connector-pe44052-p.aspx

The information contained in this document is accurate to the best of our knowledge and representative of the part described herein. It may be necessary to make modifications to the part and/or the documentation of the part, in order to implement improvements. Pasternack reserves the right to make such changes as required. Unless otherwise stated, all specifications are nominal. Pasternack does not make any representation or warranty regarding the suitability of the part described herein for any particular purpose, and Pasternack does not assume any liability arising out of the use of any part or documentation.

Pasternack Enterprises, Inc. • P.O. Box 16759, Irvine, CA 92623
Phone: (866) 727-8376 or (949) 261-1920 • **Fax:** (949) 261-7451
Sales@Pasternack.com • Techsupport@Pasternack.com

© 2020 Pasternack Enterprises All Rights Reserved

PE44052 CAD Drawing

UHF Male Connector Clamp/Solder Attachment for RG58, RG55, RG141, RG142, RG223, RG400, RG303, PE-C195, PE-P195, LMR-195

REVISIONS			
REV.	DESCRIPTION	DATE	APPROVED
A	PCR PE44052 20200817	10/20/20	SRAUTUS

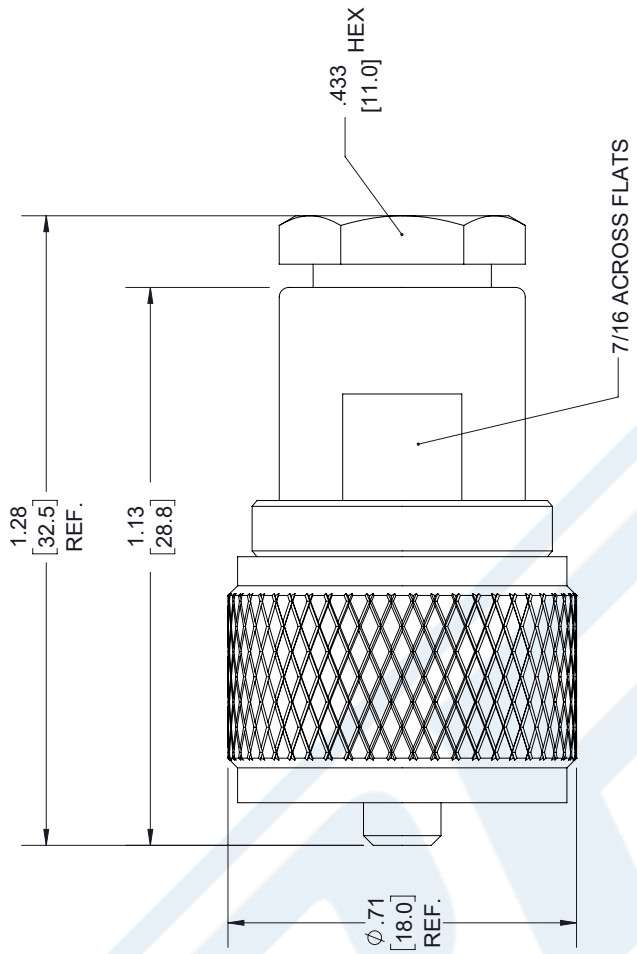

ASSEMBLY PROCEDURES

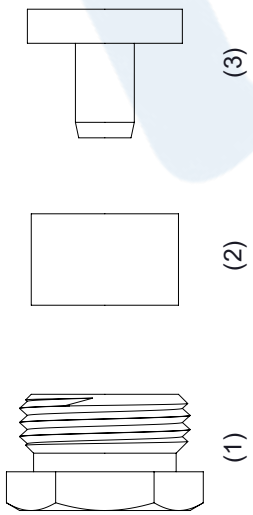

1. SLIDE CLAMP NUT (1) & GASKET (2) OVER CABLE. STRIP CABLE AS SHOWN BELOW.

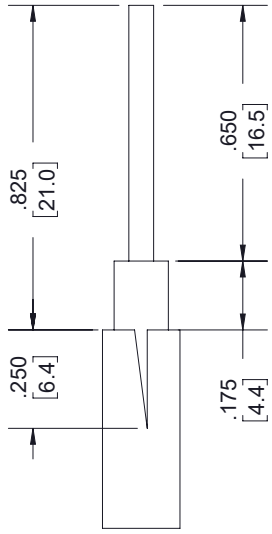

STRIPPING DIMENSIONS

2. INSERT BRAID CLAMP (3) BETWEEN BRAID & DIELECTRIC. INSERT ASSEMBLY INTO BODY. THEN SOLDER CENTER CONDUCTOR TO CONTACT AND TIGHTEN.

THIRD-ANGLE PROJECTION

THE INFORMATION AND DESIGN IN THIS DOCUMENT IS THE PROPERTY OF PASTERNACK CORPORATION ALL RIGHTS RESERVED.

SHEET 1 OF 1

SCALE N/A

REV A

PASTERNACK an INFINITE brand

Pasternack Enterprises, Inc.
P.O.Box 16759, Irvine, CA 92623.
Phone: 1.949.261.1920 | 1.866.727.8376
Fax: 1.949.261.7451
Website: www.pasternack.com
E-mail: sales@pasternack.com

SIZE A | CAGE CODE 53919 | DRAWN BY SLI | ITEM NO. PE44052

UNLESS OTHERWISE SPECIFIED LEADING DIMENSIONS ARE INCHES DIMENSIONS IN [ ] ARE MILLIMETERS

TOLERANCES:

.X = ± .2 [5.08] | FRACTIONS ± 1/32
.XX = ± .02 [.51]
.XXX = ± .005 [.13] | ANGLES ± 1°

CABLE LENGTH (L) TOLERANCES:

L ≤ 12 [305] = +1 [25] / -0
12 [305] < L ≤ 60 [1524] = +2 [51] / -0
60 [1524] < L ≤ 120 [3048] = +4 [102] / -0
120 [3048] < L ≤ 300 [7620] = +6 [152] / -0
300 [7620] < L = +5%L / -0

ALL DIMENSIONS SHOWN ARE FOR REFERENCE ONLY.

THESE COMMODITIES, TECHNOLOGY OR SOFTWARE WERE EXPORTED FROM THE UNITED STATES IN ACCORDANCE WITH THE EXPORT ADMINISTRATION REGULATIONS. DIVERSION CONTRARY TO U.S. LAW PROHIBITED.

T-Rev.D

© 2020 Pasternack Enterprises All Rights Reserved

PASTERNACK®
www.pasternack.com

Flexible RG400 Coax Cable Double Shielded with Tan FEP Jacket

TECHNICAL DATA SHEET RG400/U

Flexible RG400 Coax Cable Double Shielded with Tan FEP Jacket

Configuration

Inner Conductor Material and Plating	Copper, Silver
Dielectric Type	PTFE
Shield Materials	Silver Plated Copper Braid, Silver Plated Copper Braid
Jacket Material and Color	FEP, Tan

Electrical Specifications

Impedance, Ohms	50
Velocity of Propagation, %	69.5
Maximum Operating Frequency, GHz	12.4
Capacitance, pF/ft [pF/m]	32 [104.99]
Maximum Operating Voltage, Volts	1,900

Electrical Specifications by Frequency

Frequency 1

Frequency, MHz	100
Attenuation, dB/100ft [dB/100m]	4.4 [14.44]

Frequency 2

Frequency, MHz	1000
Attenuation, dB/100ft [dB/100m]	14.7 [48.23]

Frequency 3

Frequency, GHz	5
Attenuation, dB/100ft [dB/100m]	36 [118.11]

Frequency 4

Frequency, GHz	11
Attenuation, dB/100ft [dB/100m]	57.9 [189.96]

Mechanical Specifications

Temperature

Operating Range, deg C	-55 to +200

Inner Conductor

Number of Strands	19
Material	Copper
Plating	Silver
Diameter, in [mm]	0.039 [0.99]

Click the following link (or enter part number in “SEARCH” on website) to obtain additional part information including price, inventory and certifications: Flexible RG400 Coax Cable Double Shielded with Tan FEP Jacket RG400/U

The information contained in this document is accurate to the best of our knowledge and representative of the part described herein. It may be necessary to make modifications to the part and/or the documentation of the part, in order to implement improvements. Pasternack reserves the right to make such changes as required. Unless otherwise stated, all specifications are nominal.

Pasternack Enterprises, Inc. • P.O. Box 16759, Irvine, CA 92623
Phone: (866) 727-8376 or (949) 261-1920 • **Fax:** (949) 261-7451
Sales@Pasternack.com • Techsupport@Pasternack.com

© 2013 Pasternack Enterprises All Rights Reserved

Flexible RG400 Coax Cable Double Shielded with Tan FEP Jacket

TECHNICAL DATA SHEET RG400/U

Dielectric:	
Type	PTFE
Diameter, in [mm]	0.116 [2.95]
Shield:	
Number of	2
Material 1	Silver Plated Copper Braid
Material 2	Silver Plated Copper Braid
Diameter, in [mm]	0.156 [3.96]
Jacket:	
Material	FEP
Diameter, in [mm]	0.195 [4.95]
Color	Tan
One Time Minimum Bend Radius, in [mm]	1 [25.4]
Weight, lbs/ft [Kg/m]	0.046 [0.07]

Compliance Certifications (visit www.Pasternack.com for current document)

RoHS Compliant	Yes

Plotted and Other Data

Notes:	Values at 25 °C, sea level

Flexible RG400 Coax Cable Double Shielded with Tan FEP Jacket from Pasternack Enterprises has same day shipment for domestic and International orders. Our RF, microwave and fiber optic products maintain a 99% availability and are part of the broadest selection in the industry.

Click the following link (or enter part number in “SEARCH” on website) to obtain additional part information including price, inventory and certifications: Flexible RG400 Coax Cable Double Shielded with Tan FEP Jacket RG400/U

URL: http://www.pasternack.com/flexible-0.195-rg400-stranded-center-conductor-50-ohm-coax-cable-fep-jacket-rg400-u-p.aspx

The information contained in this document is accurate to the best of our knowledge and representative of the part described herein. It may be necessary to make modifications to the part and/or the documentation of the part, in order to implement improvements. Pasternack reserves the right to make such changes as required. Unless otherwise stated, all specifications are nominal.

Pasternack Enterprises, Inc. • P.O. Box 16759, Irvine, CA 92623
Phone: (866) 727-8376 or (949) 261-1920 • **Fax:** (949) 261-7451
Sales@Pasternack.com • Techsupport@Pasternack.com

© 2013 Pasternack Enterprises All Rights Reserved

RG400/U CAD Drawing

Flexible RG400 Coax Cable Double Shielded with Tan FEP Jacket

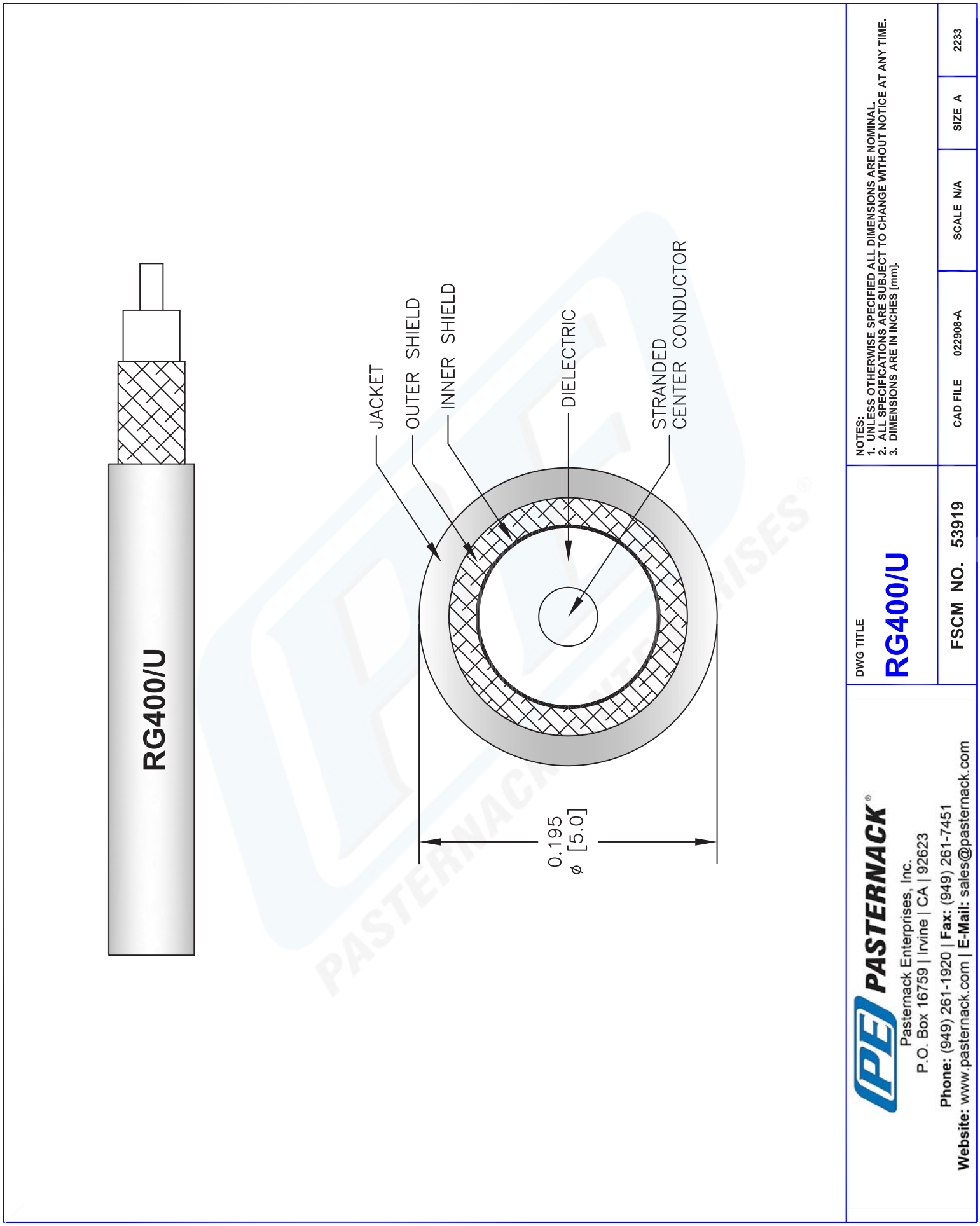

© 2013 Pasternack Enterprises All Rights Reserved