PASTERNACK
an INFINITE brand

# FAKRA Plug Connector Crimp/Solder Attachment for RG174, RG316, RG188, .100 inch, PE-B100, PE-C100, LMR-100, Black Color

RF Connectors
Technical Data Sheet

PE45404A

## Configuration

- FAKRA Plug Connector
- 50 Ohms
- Straight Body Geometry
- RG174, RG316, RG188, .100 inch, PE-B100, PE-C100, LMR-100 Interface Type
- Crimp/Solder Attachment

## Features

- Max. Operating Frequency 4 GHz
- Good VSWR of 1.3:1
- Gold Plated Phosphor Bronze Contact

## Applications

- General Purpose Test
- Custom Cable Assemblies

### Description

Pasternack's PE45404A FAKRA plug connector with crimp/solder attachment for RG174, RG316, RG188, .100 inch, PE-B100, PE-C100 and LMR-100 is part of our full line of RF components available for same-day shipping. Our FAKRA plug connector operates up to a maximum frequency of 4 GHz and offers good VSWR of 1.3:1.

Our FAKRA plug connector PE45404A datasheet specifications and drawing with dimensions are shown below in this PDF. Pasternack's broad catalog of RF, microwave and millimeter wave connectors allows designers to configure and customize their signal connections however they like. Whether the need is to provide an I/O for a board design, or simply create a custom cable assembly configuration, Pasternack has the right connector for the job. Pasternack can also expertly build your custom cable assemblies for you and ship same-day.

### Electrical Specifications

| Description | Minimum | Typical | Maximum | Units |
|---|---|---|---|---|
| Frequency Range | DC | | 4 | GHz |
| VSWR | | | 1.3:1 | |
| Operating Voltage (AC) | | | 335 | Vrms |
| Dielectric Withstanding Voltage (AC) | | | 800 | Vrms |
| Inner Conductor DC Resistance | | | 6 | mOhms |
| Outer Conductor DC Resistance | | | 2.5 | mOhms |
| Insulation Resistance | 1,000 | | | MOhms |

### Mechanical Specifications

| | |
|---|---|
| **Size** | |
| Length | 0.89 in [22.61 mm] |
| Width/Dia. | 0.37 in [9.40 mm] |
| Height | 0.433 in [11 mm] |
| Weight | 0.005 lbs [2.27 g] |

Click the following link (or enter part number in "SEARCH" on website) to obtain additional part information including price, inventory and certifications: FAKRA Plug Connector Crimp/Solder Attachment for RG174, RG316, RG188, .100 inch, PE-B100, PE-C100, LMR-100, Black Color PE45404A

Pasternack Enterprises, Inc. • P.O. Box 16759, Irvine, CA 92623
**Phone:** (866) 727-8376 or (949) 261-1920 • **Fax:** (949) 261-7451
Sales@Pasternack.com • Techsupport@Pasternack.com

© 2019 Pasternack Enterprises All Rights Reserved

# FAKRA Plug Connector Crimp/Solder Attachment for RG174, RG316, RG188, .100 inch, PE-B100, PE-C100, LMR-100, Black Color



**Material Specifications**

| Description | Material | Plating |
|---|---|---|
| Contact | Phosphor Bronze | Gold |
| Insulation | PTFE | |
| Outer Conductor | Brass | Nickel |
| Body | Plastic | |

## Environmental Specifications

**Temperature**

Operating Range -40 to +85 deg C

## Compliance Certifications (see product page for current document)

## Plotted and Other Data

Notes:

Click the following link (or enter part number in “SEARCH” on website) to obtain additional part information including price, inventory and certifications: FAKRA Plug Connector Crimp/Solder Attachment for RG174, RG316, RG188, .100 inch, PE-B100, PE-C100, LMR-100, Black Color PE45404A

Pasternack Enterprises, Inc. • P.O. Box 16759, Irvine, CA 92623
**Phone:** (866) 727-8376 or (949) 261-1920 • **Fax:** (949) 261-7451
Sales@Pasternack.com • Techsupport@Pasternack.com

© 2019 Pasternack Enterprises All Rights Reserved

# FAKRA Plug Connector Crimp/Solder Attachment for RG174, RG316, RG188, .100 inch, PE-B100, PE-C100, LMR-100, Black Color



**Assembly Instruction**

*

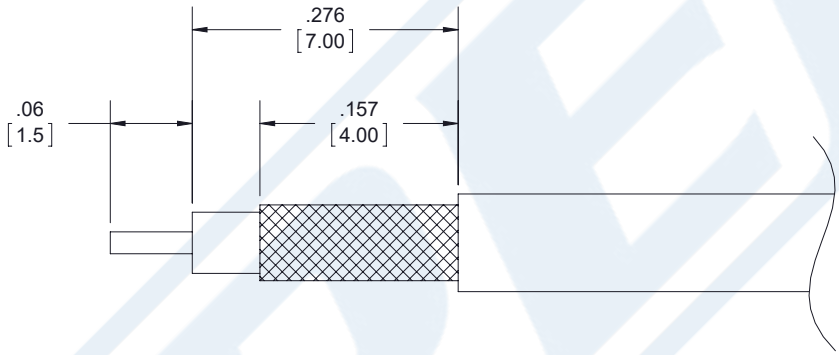


## ASSEMBLY PROCEDURES

1. STRIP CABLE TO THE DIMENSIONS SHOWN, DO NOT NICK CENTER CONDUCTOR OR BRAID.
2. PUSH CENTER CONDUCTOR FULLY INTO CONTACT AND SOLDER, REMOVE ANY EXCESS SOLDER.
3. FLARE BRAID AND INSERT CONTACT INTO THE BODY UNTIL IT SEATS.
4. SLIDE FERRULE OVER BRAID AND CRIMP WITH CRIMP TOOL.

## CRIMP SIZE REQUIRED

- CONTACT: SOLDER.
- FERRULE: .128 HEX CRIMP TOOL.

Click the following link (or enter part number in “SEARCH” on website) to obtain additional part information including price, inventory and certifications: FAKRA Plug Connector Crimp/Solder Attachment for RG174, RG316, RG188, .100 inch, PE-B100, PE-C100, LMR-100, Black Color PE45404A

Pasternack Enterprises, Inc. • P.O. Box 16759, Irvine, CA 92623
**Phone:** (866) 727-8376 or (949) 261-1920 • **Fax:** (949) 261-7451
Sales@Pasternack.com • Techsupport@Pasternack.com

© 2019 Pasternack Enterprises All Rights Reserved

# FAKRA Plug Connector Crimp/Solder Attachment for RG174, RG316, RG188, .100 inch, PE-B100, PE-C100, LMR-100, Black Color

## RF Connectors
## Technical Data Sheet

PE45404A

FAKRA Plug Connector Crimp/Solder Attachment for RG174, RG316, RG188, .100 inch, PE-B100, PE-C100, LMR-100, Black Color from Pasternack Enterprises has same day shipment for domestic and International orders. Our RF, microwave and millimeter wave products maintain a 99.4% availability and are part of the broadest selection in the industry.

Click the following link (or enter part number in “SEARCH” on website) to obtain additional part information including price, inventory and certifications: FAKRA Plug Connector Crimp/Solder Attachment for RG174, RG316, RG188, .100 inch, PE-B100, PE-C100, LMR-100, Black Color PE45404A

URL: https://www.pasternack.com/fakra-plug-rg174-rg316-.100-pe-b100-pe-c100-connector-pe45404a-p.aspx

The information contained in this document is accurate to the best of our knowledge and representative of the part described herein. It may be necessary to make modifications to the part and/or the documentation of the part, in order to implement improvements. Pasternack reserves the right to make such changes as required. Unless otherwise stated, all specifications are nominal. Pasternack does not make any representation or warranty regarding the suitability of the part described herein for any particular purpose, and Pasternack does not assume any liability arising out of the use of any part or documentation.

Pasternack Enterprises, Inc. • P.O. Box 16759, Irvine, CA 92623
**Phone:** (866) 727-8376 or (949) 261-1920 • **Fax:** (949) 261-7451
Sales@Pasternack.com • Techsupport@Pasternack.com

© 2019 Pasternack Enterprises All Rights Reserved

# PE45404A CAD Drawing

FAKRA Plug Connector Crimp/Solder Attachment for RG174, RG316, RG188, .100 inch, PE-B100, PE-C100, LMR-100, Black Color

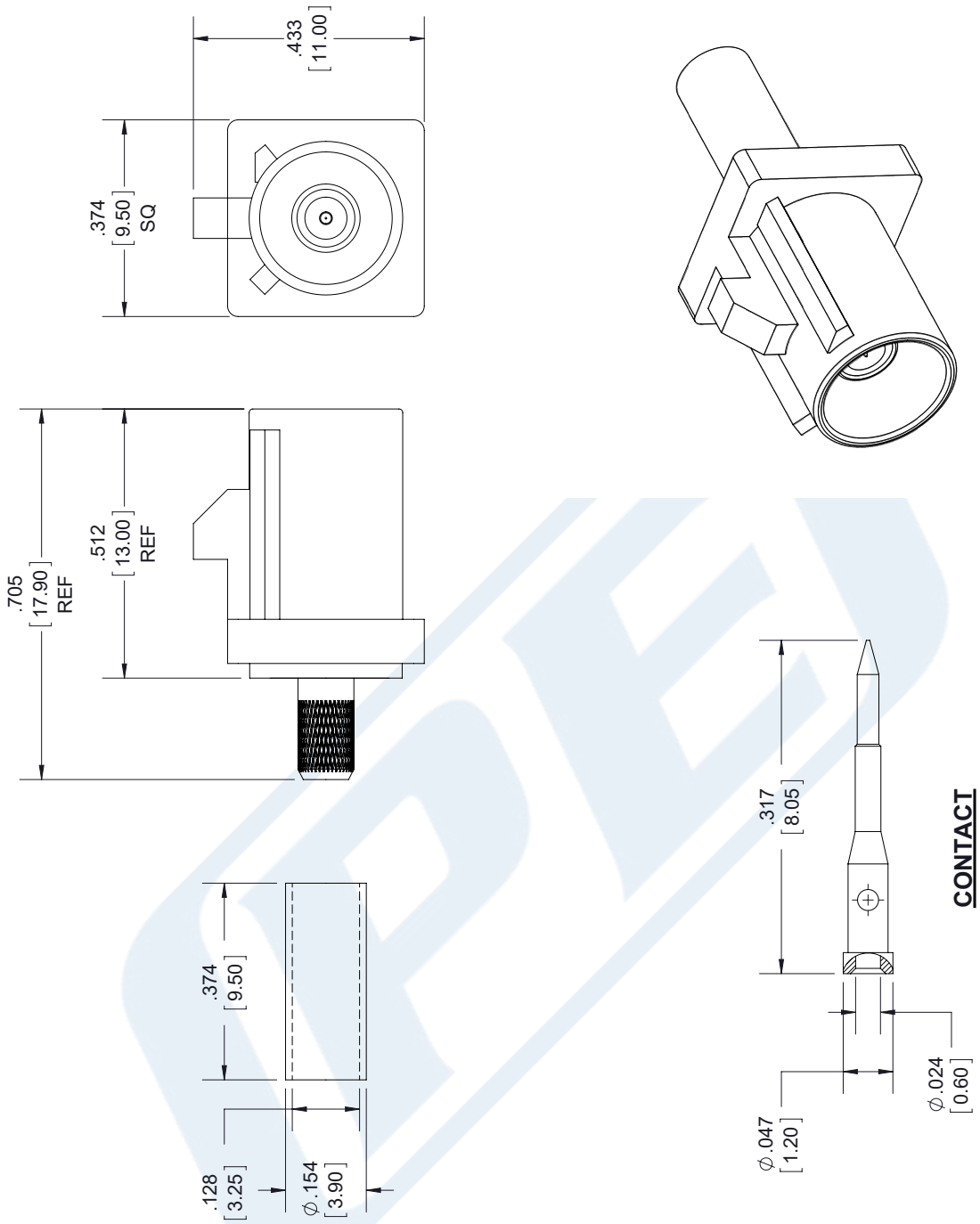


**FAKRA CONFIGURATION**

| CODING | JACK | COLOR | APPLICATION |
|---|---|---|---|
| A | | BLACK | RADIO WITH PHANTOM SUPPLY |
| B | | WHITE | RADIO WITHOUT PHANTOM SUPPLY |
| C | | BLUE | GPS: TELEMATICS OR NAVIGATION |
| D | | BORDEAUX | GSM: CELLULAR PHONE |
| H | | VIOLET | GPS: TELEMATICS AND NAVIGATION |
| I | | BEIGE | BLUETOOTH |
| K | | CURRY | RADIO WITH IF OUTPUT (ANTENNA DIVERSITY) |
| Z | | WATER BLUE | NEUTRAL CODING |

STANDARD TOLERANCES
.X ±0.2
.XX ±0.01
.XXX ±0.005

*STANDARD TOLERANCES APPLY ONLY TO DIMENSIONS IN INCHES

NOTES:
1. UNLESS OTHERWISE SPECIFIED ALL DIMENSIONS ARE NOMINAL.
2. ALL SPECIFICATIONS ARE SUBJECT TO CHANGE WITHOUT NOTICE AT ANY TIME
3. DIMENSIONS ARE IN INCHES [mm].

DWG TITLE PE45404A

CAD FILE 082917 | SCALE N/A | SIZE A | 9999

CAGE CODE 53919

PASTERNACK® THE ENGINEER'S RF SOURCE
Pasternack Enterprises, Inc.
P.O. Box 16759 | Irvine | CA | 92623
**Phone:** (949) 261-1920 | **Fax:** (949) 261-7451
**Website:** www.pasternack.com | **E-Mail:** sales@pasternack.com

© 2019 Pasternack Enterprises All Rights Reserved

PASTERNACK
an INFINITE brand

# TNC Male Connector Crimp/Crimp Attachment for RG174, RG316, RG188, LMR-100, PE-B100, PE-C100, .100 inch

RF Connectors
Technical Data Sheet

PE45527

## Configuration

- TNC Male Connector
- 50 Ohms
- Straight Body Geometry
- Connector Interface Types: RG174, RG316, RG188, LMR-100, PE-B100, PE-C100, .100 inch

## Features

- Max. Operating Frequency 3 GHz
- Good VSWR of 1.3:1
- Gold Plated Brass Contact
- 30 µin minimum contact plating

## Applications

- General Purpose Test
- Custom Cable Assemblies

### Description

Pasternack's PE45527 TNC male connector with crimp/solder attachment for RG174, RG316, RG188, LMR-100, PE-B100, PE-C100 and .100 inch is part of our full line of RF components available for same-day shipping. Our TNC male connector operates up to a maximum frequency of 3 GHz and offers good VSWR of 1.3:1.

Our TNC male connector PE45527 datasheet specifications and drawing with dimensions are shown below in this PDF. Pasternack's broad catalog of RF, microwave and millimeter wave connectors allows designers to configure and customize their signal connections however they like. Whether the need is to provide an I/O for a board design, or simply create a custom cable assembly configuration, Pasternack has the right connector for the job. Pasternack can also expertly build your custom cable assemblies for you and ship same-day.

### Electrical Specifications

| Description | Minimum | Typical | Maximum | Units |
|---|---|---|---|---|
| Frequency Range | DC | | 3 | GHz |
| VSWR | | | 1.3:1 | |
| Operating Voltage (AC) | | | 500 | Vrms |

### Mechanical Specifications

**Size**

| | |
|---|---|
| Length | 0.88 in [22.35 mm] |
| Width/Dia. | 0.571 in [14.50 mm] |

Click the following link (or enter part number in "SEARCH" on website) to obtain additional part information including price, inventory and certifications: TNC Male Connector Crimp/Crimp Attachment for RG174, RG316, RG188, LMR-100, PE-B100, PE-C100, .100 inch PE45527

Pasternack Enterprises, Inc. • P.O. Box 16759, Irvine, CA 92623
**Phone:** (866) 727-8376 or (949) 261-1920 • **Fax:** (949) 261-7451
Sales@Pasternack.com • Techsupport@Pasternack.com

© 2020 Pasternack Enterprises All Rights Reserved

# TNC Male Connector Crimp/Crimp Attachment for RG174, RG316, RG188, LMR-100, PE-B100, PE-C100, .100 inch



**Material Specifications**

| Description | Material | Plating |
|---|---|---|
| Contact | Brass | Gold<br>30 µin minimum |
| Insulation | PTFE | |
| Body | Brass | Nickel<br>100 µin minimum |
| Coupling Nut | Brass | Nickel<br>100 µin minimum |

## Environmental Specifications

**Temperature**

Operating Range -65 to +165 deg C

## Compliance Certifications (see product page for current document)

## Plotted and Other Data

Notes:

TNC Male Connector Crimp/Crimp Attachment for RG174, RG316, RG188, LMR-100, PE-B100, PE-C100, .100 inch from Pasternack Enterprises has same day shipment for domestic and International orders. Our RF, microwave and millimeter wave products maintain a 99.4% availability and are part of the broadest selection in the industry.

Click the following link (or enter part number in “SEARCH” on website) to obtain additional part information including price, inventory and certifications: TNC Male Connector Crimp/Crimp Attachment for RG174, RG316, RG188, LMR-100, PE-B100, PE-C100, .100 inch PE45527

URL: https://www.pasternack.com/tnc-male-rg174-rg316-lmr-100-pe-b100-pe-c100-connector-pe45527-p.aspx

The information contained in this document is accurate to the best of our knowledge and representative of the part described herein. It may be necessary to make modifications to the part and/or the documentation of the part, in order to implement improvements. Pasternack reserves the right to make such changes as required. Unless otherwise stated, all specifications are nominal. Pasternack does not make any representation or warranty regarding the suitability of the part described herein for any particular purpose, and Pasternack does not assume any liability arising out of the use of any part or documentation.

Pasternack Enterprises, Inc. • P.O. Box 16759, Irvine, CA 92623
**Phone:** (866) 727-8376 or (949) 261-1920 • **Fax:** (949) 261-7451
Sales@Pasternack.com • Techsupport@Pasternack.com

© 2020 Pasternack Enterprises All Rights Reserved

# PE45527 CAD Drawing

TNC Male Connector Crimp/Crimp Attachment for RG174, RG316, RG188, LMR-100, PE-B100, PE-C100, .100 inch

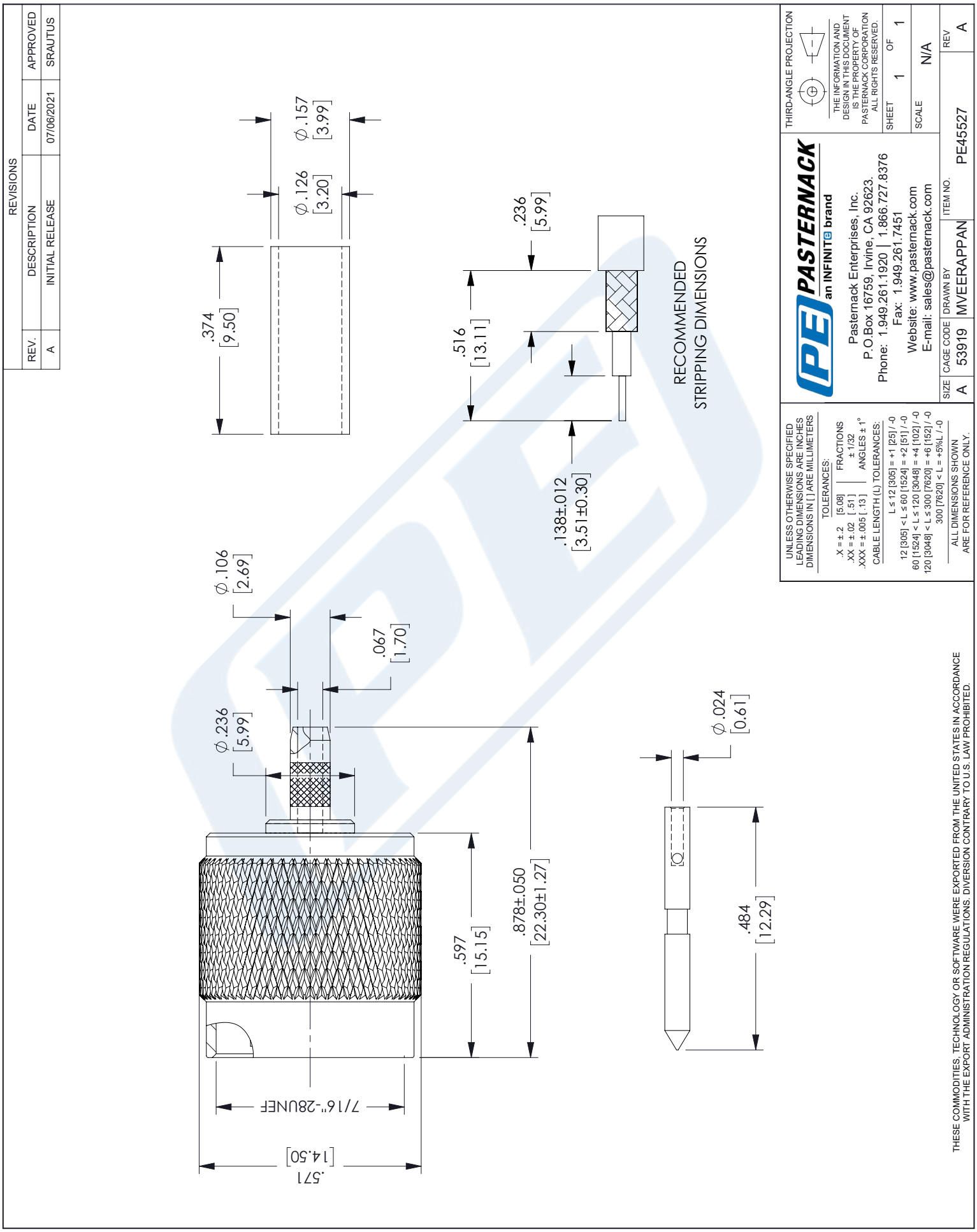

TIMES MICROWAVE SYSTEMS

# LMR®-100A
# Flexible Low Loss Communications Coax

## Ideal for...

- Drop-in Replacement for RG-316/RG-174 (uses standard connectors)
- Jumper Assemblies in Wireless Communications Systems
- Short Antenna Feeder runs
- Any application (e.g. WLL, GPS, LMR, WLAN, WISP, WiMax, SCADA, Mobile Antennas) requiring an easily routed, low loss RF cable

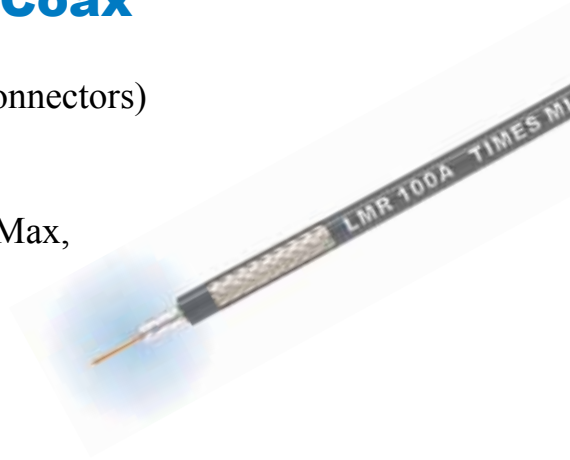


- **LMR®- PVC** is designed for low loss general-purpose indoor/outdoor applications and is somewhat more flexible than the standard polyethylene jacketed LMR.
- **LMR®- PVC-W** is a white-jacketed version of LMR-PVC for marine and other indoor/outdoor applications where color compatibility is desired.
- **Flexibility** and bendability are hallmarks of the LMR-100A cable design. The flexible outer conductor enables the tightest bend radius available for any cable of similar size and performance.
- **Low Loss** is another hallmark feature of LMR-100A. Size for size LMR has the lowest loss of any flexible cable and comparable loss to semirigid hard-line cables.
- **RF Shielding** is 50 dB greater than typical single shielded coax (40 dB). The multi-ply bonded foil outer conductor is rated conservatively at > 90 dB (i.e. >180 dB between two adjacent cables).
- **Weatherability**: LMR-100A cables designed for outdoor exposure incorporate the best materials for UV resistance and have life expectancy in excess of 20 years.
- **Connectors**: A wide variety of connectors are available for LMR-100A cable, including all common interface types, reverse polarity, and a choice of solder or non-solder center pins. Most LMR connectors employ crimp outer attachment using standard hex crimp sizes.
- **Cable Assemblies**: All LMR-100A cable types are available as pre-terminated cable assemblies. Refer to the section on FlexTech for further details.

**Construction Specifications**

| Description | Material | In. | (mm) |
|---|---|---|---|
| Inner Conductor | Solid BCCS | 0.018 | (0.46) |
| Dielectric | Solid PE | 0.060 | (1.52) |
| Outer Conductor | Aluminum Tape | 0.065 | (1.65) |
| Overall Braid | Tinned Copper | 0.083 | (2.11) |
| Jacket | (see table above) | 0.110 | (2.79) |

**Mechanical Specifications**

| Performance Property | Units | US | (metric) |
|---|---|---|---|
| Bend Radius: installation | in. (mm) | 0.25 | (6.4) |
| Bend Radius: repeated | in. (mm) | 1 | (25.4) |
| Bending Moment | ft-lb (N-m) | 0.1 | (0.014) |
| Weight | lb/ft (kg/m) | 0.0092 | (.014) |
| Tensile Strength | lb (kg) | 15 | (6.8) |
| Flat Plate Crush | lb/in. (kg/mm) | 10 | (0.18) |

**Environmental Specifications**

| Performance Property | °F | °C |
|---|---|---|
| Installation Temperature Range | -40/+185 | -40/+85 |
| Storage Temperature Range | -94/+185 | -70/+85 |
| Operating Temperature Range | -40/+185 | -40/+85 |

**Electrical Specifications**

| Performance Property | Units | US | (metric) |
|---|---|---|---|
| Velocity of Propagation | % | 66 | |
| Dielectric Constant | NA | 2.30 | |
| Time Delay | nS/ft (nS/m) | 1.54 | (5.05) |
| Impedance | ohms | 50 | |
| Capacitance | pF/ft (pF/m) | 30.8 | (101.1) |
| Inductance | uH/ft (uH/m) | 0.077 | (0.25) |
| Shielding Effectiveness | dB | >90 | |
| DC Resistance | | | |
| Inner Conductor | ohms/1000ft (/km) | 81.0 | (266) |
| Outer Conductor | ohms/1000ft (/km) | 9.5 | (31.2) |
| Voltage Withstand | Volts DC | 500 | |
| Jacket Spark | Volts RMS | 2000 | |
| Peak Power | kW | 0.6 | |

**Part Description**

| Part Number | Application | Jacket | Color | Stock Code |
|---|---|---|---|---|
| LMR-100A-FR | Indoor/Outdoor Riser CMR | FRPE | Black | 54037 |
| LMR-100A-PVC | Indoor/Outdoor | PVC | Black | 54119 |
| LMR-100A-PVC-W | Indoor/Outdoor | PVC | White | 54200 |

PVC = Poly Vinyl Chloride; MTO = Made to Order

## Attenuation vs. Frequency (typical)

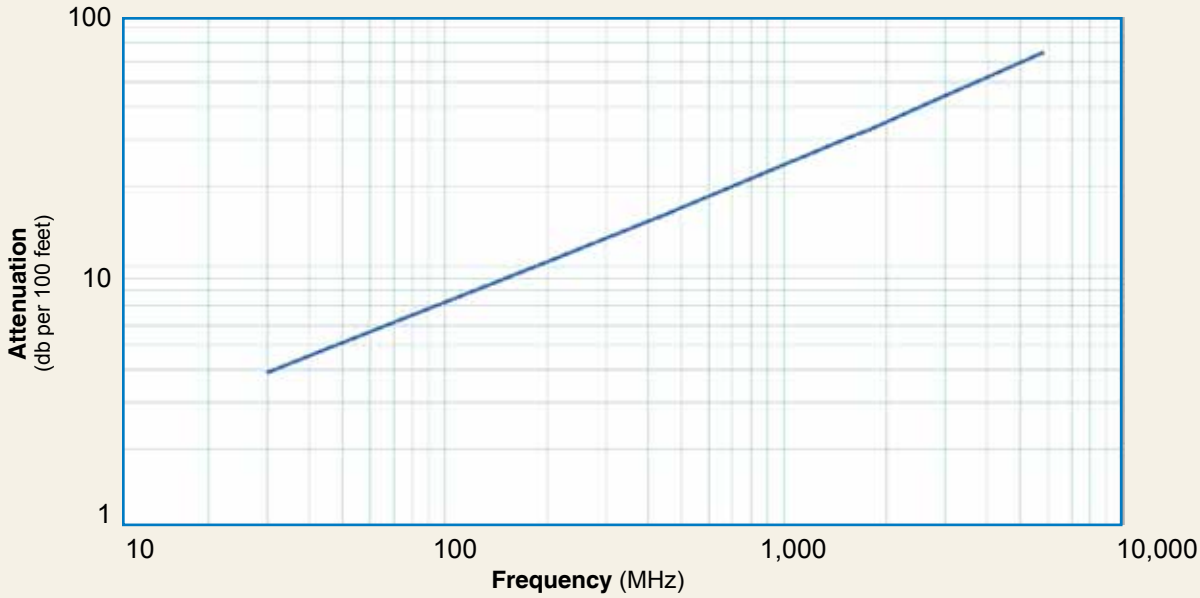


| Frequency (MHz) | 30 | 50 | 150 | 220 | 450 | 900 | 1500 | 1800 | 2000 | 2500 | 5800 |
|---|---|---|---|---|---|---|---|---|---|---|---|
| **Attenuation dB/100 ft** | 3.9 | 5.1 | 8.9 | 10.9 | 15.8 | 22.8 | 30.1 | 33.2 | 35.2 | 39.8 | 64.1 |
| **Attenuation dB/100 m** | 12.9 | 16.7 | 29.4 | 35.8 | 51.9 | 74.9 | 98.7 | 109.0 | 115.5 | 130.6 | 210.3 |
| **Avg. Power kW** | 0.230 | 0.180 | 0.100 | 0.083 | 0.057 | 0.039 | 0.029 | 0.027 | 0.025 | 0.022 | 0.013 |

**Calculate Attenuation** = (0.709140) • $\sqrt{\text{FMHz}}$ + (0.001740) • FMHz (interactive calculator available at http://www.timesmicrowave/telecom)
**Attenuation:** VSWR=1.0 ; Ambient = +25°C (77°F) **Power:** VSWR=1.0; Ambient = +40°C; Inner Conductor = 100°C (212°F);
Sea Level; dry air; atmospheric pressure; no solar loading

TC-100-SM

TC-100-TM

# Connectors

| Interface | Description | Part Number | Stock Code | VSWR ** Freq. | (GHz) | Coupling Nut | Inner Contact Attach | Outer Contact Attach | Finish* Body /Pin | Length in | (mm) | Width in | (mm) | Weight lb | (g) |
|---|---|---|---|---|---|---|---|---|---|---|---|---|---|---|---|
| SMA male | Straight Plug | TC-100-SM | 3190-1551 | <1.25:1 | (<3 ) | Hex | Solder | Crimp | SS/G | 1.0 | (25.4) | 0.32 | (8.1) | 0.015 | (6.8) |
| TNC male | Straight Plug | TC-100-TM | 3190-1552 | <1.25:1 | (<3 ) | Knurl | Solder | Crimp | S/G | 1.4 | (35.6) | 0.59 | (15.0) | 0.045 | (20.4) |

* Finish metals: N=Nickel, S=Silver, G=Gold, SS=Stainless Steel, A=Alballoy **VSWR spec based on 3 foot cable with a connector pair

CT-240/200/195/100

# Install Tools

| Type | Part Number | Stock Code | Description |
|---|---|---|---|
| Crimp Tool | CT-240/200/195/100 | 3190-667 | Crimp tool for LMR-100, 195, 200 and 240 connectors |
| Cutting Tool | CCT-01 | 3190-1544 | Cable end flush cut tool |
| Replacement Blade | RB-01 | 3190-1609 | Replacement blade for cutting tool |

CCT-01