PASTERNACK®
www.pasternack.com

# FME Plug Connector Crimp/Solder Attachment For RG58

## TECHNICAL DATA SHEET PE44295

**FME Plug Connector Crimp/Solder Attachment For RG58**

### Configuration

| | |
|---|---|
| Connector | FME Plug |
| Connector Interface Type | RG58 |
| Cable Attachment Method (Shield/Contact) | Crimp/Solder |
| Body Style | Straight |

### Electrical Specifications

| | |
|---|---|
| Impedance, Ohms | 50 |

### Mechanical Specifications

**Size**

| | |
|---|---|
| Length, in [mm] | 1.335 [33.91] |
| Width/Dia., in [mm] | 0.354 [8.99] |
| Weight, lbs [g] | 0.013 [5.9] |

**Connector**

| | |
|---|---|
| Type | FME Plug |
| Contact Material and Plating | Brass, Gold |
| Contact Plating Specification | 30µ in. minimum |
| Body Material and Plating | Brass, Nickel |
| Body Plating Specification | 100µ in. minimum |
| Dielectric Type | Teflon |

### Compliance Certifications (visit www.Pasternack.com for current document)

| | |
|---|---|
| RoHS Compliant | Yes |

### Plotted and Other Data

| | |
|---|---|
| Notes: | Values at 25 °C, sea level |

FME Plug Connector Crimp/Solder Attachment For RG58 from Pasternack Enterprises has same day shipment for domestic and International orders. Our RF, microwave and fiber optic products maintain a 99% availability and are part of the broadest selection in the industry.

Click the following link (or enter part number in “SEARCH” on website) to obtain additional part information including price, inventory and certifications: FME Plug Connector Crimp/Solder Attachment For RG58 PE44295

URL: http://www.pasternack.com/fme-plug-standard-rg58-connector-pe44295-p.aspx

The information contained in this document is accurate to the best of our knowledge and representative of the part described herein. It may be necessary to make modifications to the part and/or the documentation of the part, in order to implement improvements. Pasternack reserves the right to make such changes as required. Unless otherwise stated, all specifications are nominal.

Pasternack Enterprises, Inc. • P.O. Box 16759, Irvine, CA 92623
**Phone:** (866) 727-8376 or (949) 261-1920 • **Fax:** (949) 261-7451
Sales@Pasternack.com • Techsupport@Pasternack.com

© 2013 Pasternack Enterprises All Rights Reserved

# PE44295 CAD Drawing

FME Plug Connector Crimp/Solder Attachment For RG58

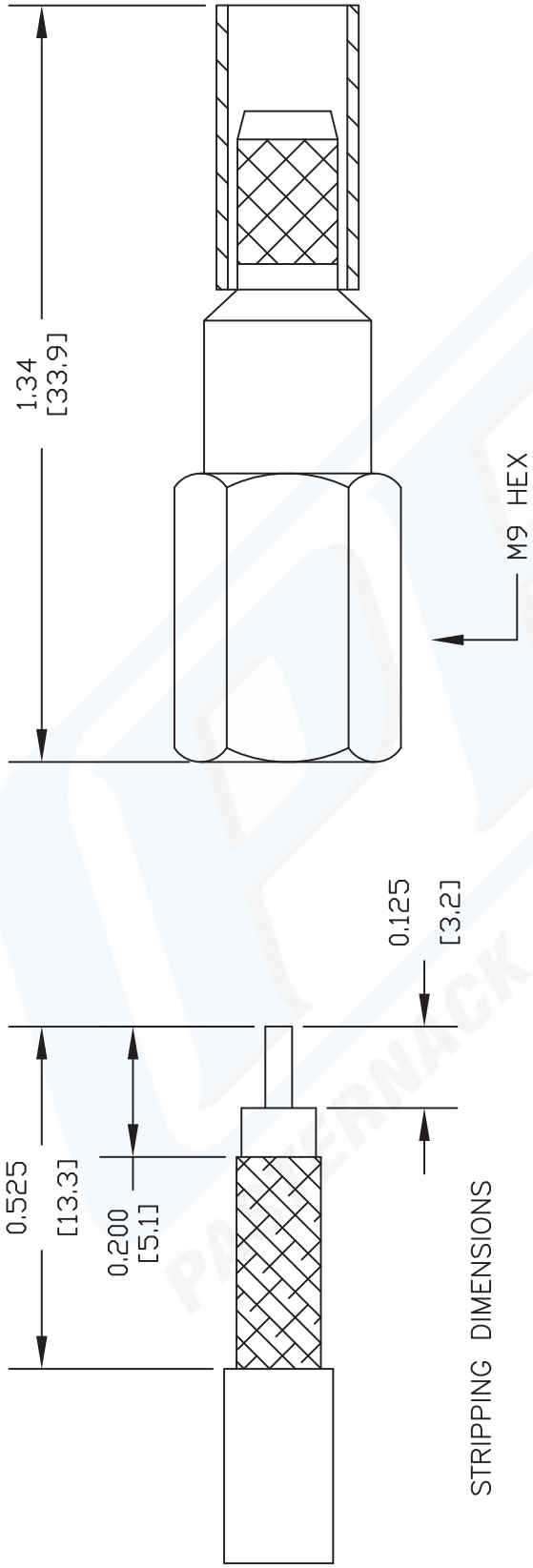


STRIPPING DIMENSIONS

CRIMP SIZE REQUIRED

CONTACT: .068" HEX CRIMP TOOL
FERRULE: .213" HEX CRIMP TOOL

NOTES:
1. UNLESS OTHERWISE SPECIFIED ALL DIMENSIONS ARE NOMINAL.
2. ALL SPECIFICATIONS ARE SUBJECT TO CHANGE WITHOUT NOTICE AT ANY TIME.
3. DIMENSIONS ARE IN INCHES [mm].
4. FITS MIL-C-17 AND EQUIVALENT CABLES.

DWG TITLE
PE44295

FSCM NO. 53919

CAD FILE 070302 | SCALE N/A | SIZE A | 2233

PASTERNACK®
Pasternack Enterprises, Inc.
P.O. Box 16759 | Irvine | CA | 92623
**Phone:** (949) 261-1920 | **Fax:** (949) 261-7451
**Website:** www.pasternack.com | **E-Mail:** sales@pasternack.com

© 2013 Pasternack Enterprises All Rights Reserved

PASTERNACK®
THE ENGINEER'S RF SOURCE

# N Male Connector Crimp/Solder Attachment For RG58

## RF Connectors Technical Data Sheet PE4329

### Configuration

- N Male Connector
- 50 Ohms
- Straight Body Geometry
- RG58 Interface Type
- Crimp/Solder Attachment

### Electrical Specifications

| Description | Minimum | Typical | Maximum | Units |
|---|---|---|---|---|
| Frequency Range | DC | | 12.4 | GHz |
| Dielectric Withstanding Voltage (AC) | | | 700 | |

### Mechanical Specifications

Weight 0.068 lbs [30.84 g]

#### Material Specifications

| Description | Material | Plating |
|---|---|---|
| Contact | Brass | Silver |
| Insulation | Teflon | |
| Body | Brass | Nickel |

### Environmental Specifications

**Temperature**

Operating Range -65 to 165 deg C

### Compliance Certifications (visit www.Pasternack.com for current document)

RoHS Compliant

Click the following link (or enter part number in "SEARCH" on website) to obtain additional part information including price, inventory and certifications: N Male Connector Crimp/Solder Attachment For RG58 PE4329

Pasternack Enterprises, Inc. • P.O. Box 16759, Irvine, CA 92623
**Phone:** (866) 727-8376 or (949) 261-1920 • **Fax:** (949) 261-7451
Sales@Pasternack.com • Techsupport@Pasternack.com

© 2016 Pasternack Enterprises All Rights Reserved

N Male Connector Crimp/Solder Attachment For RG58



**Plotted and Other Data**

Notes:

N Male Connector Crimp/Solder Attachment For RG58 from Pasternack Enterprises has same day shipment for domestic and International orders. Our RF, microwave and millimeter wave products maintain a 99% availability and are part of the broadest selection in the industry.

Click the following link (or enter part number in "SEARCH" on website) to obtain additional part information including price, inventory and certifications: N Male Connector Crimp/Solder Attachment For RG58 PE4329

URL: http://www.pasternack.com/n-male-standard-rg58-connector-pe4329-p.aspx

The information contained in this document is accurate to the best of our knowledge and representative of the part described herein. It may be necessary to make modifications to the part and/or the documentation of the part, in order to implement improvements. Pasternack reserves the right to make such changes as required. Unless otherwise stated, all specifications are nominal. Pasternack does not make any representation or warranty regarding the suitability of the part described herein for any particular purpose, and Pasternack does not assume any liability arising out of the use of any part or documentation.

Pasternack Enterprises, Inc. • P.O. Box 16759, Irvine, CA 92623
**Phone:** (866) 727-8376 or (949) 261-1920 • **Fax:** (949) 261-7451
Sales@Pasternack.com • Techsupport@Pasternack.com

© 2016 Pasternack Enterprises All Rights Reserved

# PE4329 CAD Drawing

N Male Connector Crimp/Solder Attachment For RG58

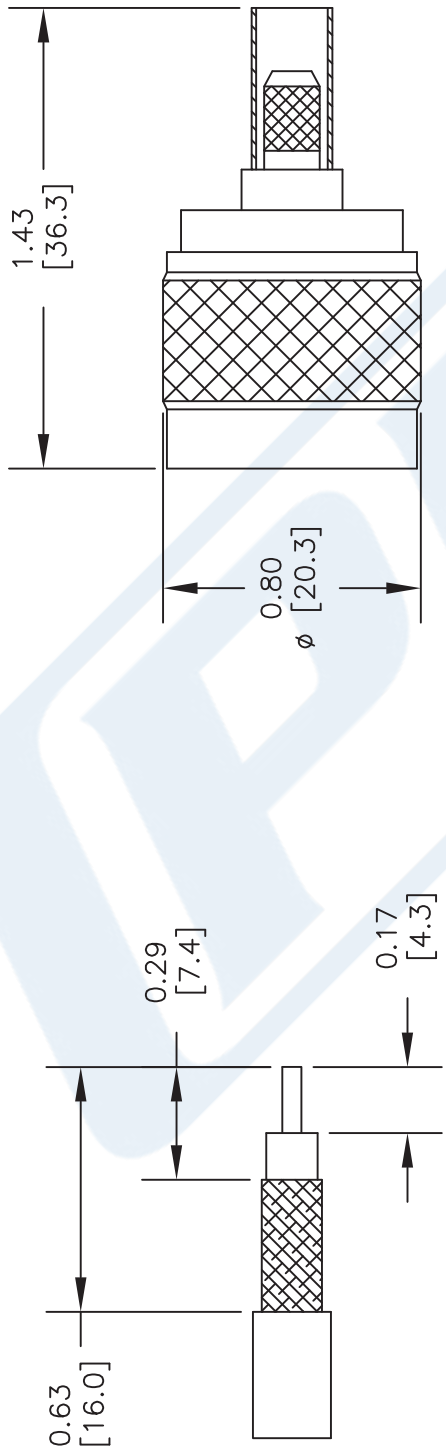


STRIPPING DIMENSIONS

CRIMP SIZE REQUIRED

CONTACT: .068" HEX CRIMP TOOL
FERRULE: .213" HEX CRIMP TOOL

NOTES:
1. UNLESS OTHERWISE SPECIFIED ALL DIMENSIONS ARE NOMINAL.
2. ALL SPECIFICATIONS ARE SUBJECT TO CHANGE WITHOUT NOTICE AT ANY TIME.
3. DIMENSIONS ARE IN INCHES [mm].
4. FITS MIL-C-17 AND EQUIVALENT CABLES.

DWG TITLE
PE4329

FSCM NO. 53919

CAD FILE 010416 | SCALE N/A | SIZE A | 2233

PASTERNACK®
THE ENGINEER'S RF SOURCE
Pasternack Enterprises, Inc.
P.O. Box 16759 | Irvine | CA | 92623
**Phone:** (949) 261-1920 | **Fax:** (949) 261-7451
**Website:** www.pasternack.com | **E-Mail:** sales@pasternack.com

© 2016 Pasternack Enterprises All Rights Reserved

PASTERNACK®
THE ENGINEER'S RF SOURCE

# Flexible RG141 Coax Cable Single Shielded with Beige PTFE (Fiberglass reinforced) Jacket



## Configuration

- Flexible Cable
- 1 Shield(s)

### Electrical Specifications

| Description | Minimum | Typical | Maximum | Units |
|---|---|---|---|---|
| Frequency Range | DC | | 10 | GHz |
| Impedance | | 50 ±2 | | Ohms |
| Velocity of Propagation | | 70 | | % |
| Dielectric Withstanding Voltage (AC) | | | 5,000 | Vrms |
| Jacket Spark | | | 2,000 | Vrms |
| Nominal Capacitance | | 29.4 [96.46] | | pF/ft [pF/m] |

### Performance by Frequency Band

| Description | F1 | F2 | F3 | F4 | F5 | Units |
|---|---|---|---|---|---|---|
| Frequency | 0.01 | 0.1 | 1 | 5 | 10 | GHz |
| Attenuation, Typ | 1.2 | 3.9 | 13 | 36 | 62 | dB/100ft |
| | 3.94 | 12.8 | 42.65 | 118.11 | 203.41 | dB/100m |

### Mechanical Specifications

| | |
|---|---|
| Diameter | 0.19 in [4.83 mm] |
| Weight | 0.033 lbs/ft [0.05 Kg/m] |

### Construction Specifications

| Description | Material and Plating | Diameter |
|---|---|---|
| Inner Conductor | Copper Clad Steel, Silver, 1 Strands | 0.037 in [0.94 mm] |
| Conductor Type | Solid | |
| Dielectric | PTFE | 0.116 in [2.95 mm] |
| First Shield | Silver Plated Copper | |

Click the following link (or enter part number in "SEARCH" on website) to obtain additional part information including price, inventory and certifications: Flexible RG141 Coax Cable Single Shielded with Beige PTFE (FG) Jacket RG141A/U

Pasternack Enterprises, Inc. • P.O. Box 16759, Irvine, CA 92623
**Phone:** (866) 727-8376 or (949) 261-1920 • **Fax:** (949) 261-7451
Sales@Pasternack.com • Techsupport@Pasternack.com

© 2017 Pasternack Enterprises All Rights Reserved

# Flexible RG141 Coax Cable Single Shielded with Beige PTFE (Fiberglass reinforced) Jacket



| | | |
|---|---|---|
| Jacket | PTFE (FG), Beige | 0.19 in [4.83 mm] |

## Environmental Specifications

**Temperature**

| | |
|---|---|
| Operating Range | -55 to +200 deg C |

**Compliance Certifications** (see product page for current document)

## Plotted and Other Data

Notes:

Flexible RG141 Coax Cable Single Shielded with Beige PTFE (Fiberglass reinforced) Jacket from Pasternack Enterprises has same day shipment for domestic and International orders. Our RF, microwave and millimeter wave products maintain a 99.4% availability and are part of the broadest selection in the industry.

Click the following link (or enter part number in "SEARCH" on website) to obtain additional part information including price, inventory and certifications: Flexible RG141 Coax Cable Single Shielded with Beige PTFE (FG) Jacket RG141A/U

URL: https://www.pasternack.com/flexible-0.190-rg141-50-ohm-coax-cable-ptfe-fr-jacket-rg141a-u-p.aspx

The information contained in this document is accurate to the best of our knowledge and representative of the part described herein. It may be necessary to make modifications to the part and/or the documentation of the part, in order to implement improvements. Pasternack reserves the right to make such changes as required. Unless otherwise stated, all specifications are nominal. Pasternack does not make any representation or warranty regarding the suitability of the part described herein for any particular purpose, and Pasternack does not assume any liability arising out of the use of any part or documentation.

Pasternack Enterprises, Inc. • P.O. Box 16759, Irvine, CA 92623
**Phone:** (866) 727-8376 or (949) 261-1920 • **Fax:** (949) 261-7451
Sales@Pasternack.com • Techsupport@Pasternack.com

© 2017 Pasternack Enterprises All Rights Reserved

# RG141A/U CAD Drawing

Flexible RG141 Coax Cable Single Shielded with Beige
PTFE (Fiberglass reinforced) Jacket

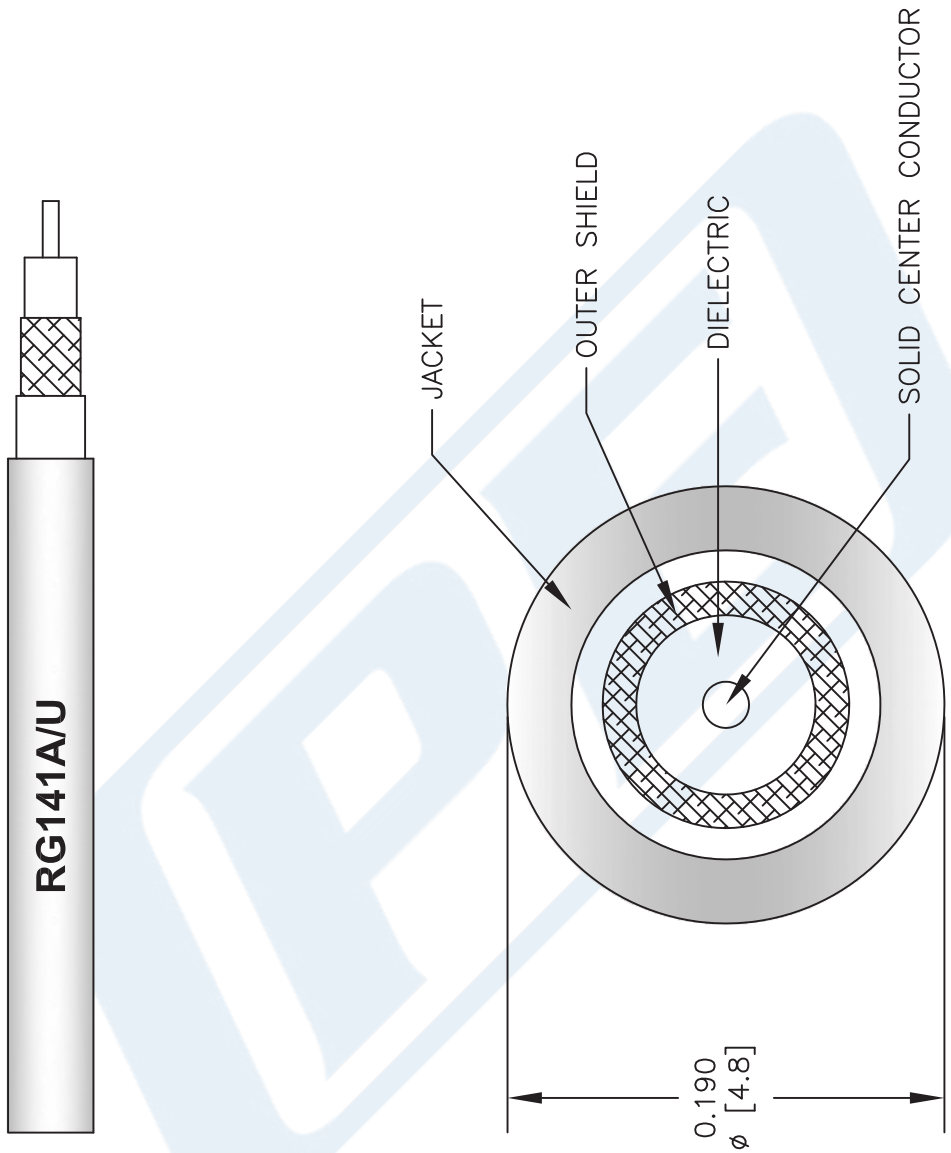


NOTES:
1. UNLESS OTHERWISE SPECIFIED ALL DIMENSIONS ARE NOMINAL.
2. ALL SPECIFICATIONS ARE SUBJECT TO CHANGE WITHOUT NOTICE AT ANY TIME.
3. DIMENSIONS ARE IN INCHES [mm].

DWG TITLE
RG141A/U

REV. A | FSCM NO. 53919 | CAD FILE 022808-A | SCALE N/A | SIZE A | 147

PASTERNACK®
Pasternack Enterprises, Inc.
P.O. Box 16759 | Irvine | CA | 92623
**Phone:** (949) 261-1920 | **Fax:** (949) 261-7451
**Website:** www.pasternack.com | **E-Mail:** sales@pasternack.com

© 2017 Pasternack Enterprises All Rights Reserved