PASTERNACK
an INFINITE brand

HN Male Right Angle Connector Clamp/Solder Attachment for RG213, RG8, RG393, RG225, RG214, RG393, RG9

RF Connectors
Technical Data Sheet

PE4230

Configuration

- HN Male Connector
- MIL-STD-348A
- 50 Ohms
- Right Angle Body Geometry
- Connector Interface Types: RG213, RG8, RG393, RG225, RG214, RG393, RG9

Features

- Max. Operating Frequency 3 GHz
- Good VSWR of 1.3:1
- Gold Plated Brass Contact
- 30 µin minimum contact plating

Applications

- General Purpose Test
- Custom Cable Assemblies

Description

Pasternack's PE4230 HN male right angle connector with clamp/solder attachment for RG213, RG8, RG393, RG225, RG214, RG393 and RG9 is part of our full line of RF components available for same-day shipping. Our HN male connector operates up to a maximum frequency of 3 GHz and offers good VSWR of 1.3:1. Its right angle body geometry allows for easier connections in tight spaces.

Our HN male right angle connector PE4230 datasheet specifications and drawing with dimensions are shown below in this PDF. Pasternack's broad catalog of RF, microwave and millimeter wave connectors allows designers to configure and customize their signal connections however they like. Whether the need is to provide an I/O for a board design, or simply create a custom cable assembly configuration, Pasternack has the right connector for the job. Pasternack can also expertly build your custom cable assemblies for you and ship same-day.

Electrical Specifications

Description	Minimum	Typical	Maximum	Units
Frequency Range	DC		3	GHz
VSWR			1.3:1	
Operating Voltage (AC)			1,500	Vrms

Mechanical Specifications

Size

Length	1.85 in [46.99 mm]
Width/Dia.	0.866 in [22.00 mm]
Height	1.461 in [37.11 mm]
Weight	0.202 lbs [91.63 g]

Click the following link (or enter part number in "SEARCH" on website) to obtain additional part information including price, inventory and certifications: HN Male Right Angle Connector Clamp/Solder Attachment for RG213, RG8, RG393, RG225, RG214, RG393, RG9 PE4230

Pasternack Enterprises, Inc. • P.O. Box 16759, Irvine, CA 92623
Phone: (866) 727-8376 or (949) 261-1920 • **Fax:** (949) 261-7451
Sales@Pasternack.com • Techsupport@Pasternack.com

© 2019 Pasternack Enterprises All Rights Reserved

HN Male Right Angle Connector Clamp/Solder Attachment for RG213, RG8, RG393, RG225, RG214, RG393, RG9

Material Specifications

Description	Material	Plating
Contact	Brass	Gold 30 µin minimum
Insulation	PTFE	
Body	Brass	Nickel 100 µin minimum
Coupling Nut	Brass	Nickel 100 µin minimum

Mechanical Specification Notes:
When attaching the connector to the cable use a clamp torque value of 60 to 65 in-lbs [6.78 to 7.34 Nm]

Environmental Specifications

Temperature

Operating Range -65 to +165 deg C

Compliance Certifications (see product page for current document)

Plotted and Other Data

Notes:

Click the following link (or enter part number in “SEARCH” on website) to obtain additional part information including price, inventory and certifications: HN Male Right Angle Connector Clamp/Solder Attachment for RG213, RG8, RG393, RG225, RG214, RG393, RG9 PE4230

Pasternack Enterprises, Inc. • P.O. Box 16759, Irvine, CA 92623
Phone: (866) 727-8376 or (949) 261-1920 • **Fax:** (949) 261-7451
Sales@Pasternack.com • Techsupport@Pasternack.com

© 2019 Pasternack Enterprises All Rights Reserved

HN Male Right Angle Connector Clamp/Solder Attachment for RG213, RG8, RG393, RG225, RG214, RG393, RG9

Assembly Instruction

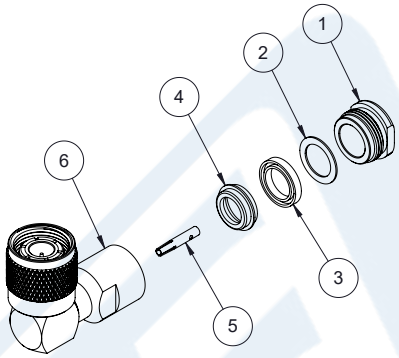

1. SLIDE CLAMP NUT ①, THIN-WASHER ② & GASKET ③ OVER CABLE. STRIP CABLE AS SHOWN. DO NOT NICK BRAID WHILE CUTTING JACKET. TAPER END OF BRAID TO PERMIT ASSEMBLY OF CLAMP.

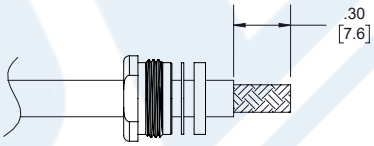

2. SLIDE BRAID CLAMP ④ OVER BRAID & SEAT AGAINST CABLE. FORM BRAID OVER CLAMP NUT. TRIM BRAID BACK TO SHOULDER. CUT DIELECTRIC & CENTER CONDUCTOR TO DIMENSION SHOWN. DO NOT NICK CENTER CONDUCTOR.

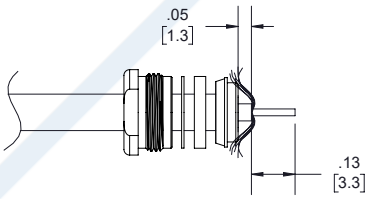

3. SOLDER CONTACT ⑤ TO CENTER CONDUCTOR. REMOVE EXCESS SOLDER. DO NOT OVER HEAT DIELECTRIC.INSERT CABLE ASSEMBLY INTO BODY ⑥ & TIGHTEN.

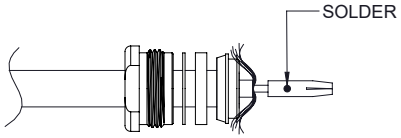

Click the following link (or enter part number in “SEARCH” on website) to obtain additional part information including price, inventory and certifications: HN Male Right Angle Connector Clamp/Solder Attachment for RG213, RG8, RG393, RG225, RG214, RG393, RG9 PE4230

Pasternack Enterprises, Inc. • P.O. Box 16759, Irvine, CA 92623
Phone: (866) 727-8376 or (949) 261-1920 • **Fax:** (949) 261-7451
Sales@Pasternack.com • Techsupport@Pasternack.com

© 2019 Pasternack Enterprises All Rights Reserved

HN Male Right Angle Connector Clamp/Solder Attachment for RG213, RG8, RG393, RG225, RG214, RG393, RG9

RF Connectors
Technical Data Sheet

PE4230

HN Male Right Angle Connector Clamp/Solder Attachment for RG213, RG8, RG393, RG225, RG214, RG393, RG9 from Pasternack Enterprises has same day shipment for domestic and International orders. Our RF, microwave and millimeter wave products maintain a 99.4% availability and are part of the broadest selection in the industry.

Click the following link (or enter part number in “SEARCH” on website) to obtain additional part information including price, inventory and certifications: HN Male Right Angle Connector Clamp/Solder Attachment for RG213, RG8, RG393, RG225, RG214, RG393, RG9 PE4230

URL: https://www.pasternack.com/hn-male-standard-rg213-rg214-rg8-rg9-rg225-rg393-connector-pe4230-p.aspx

The information contained in this document is accurate to the best of our knowledge and representative of the part described herein. It may be necessary to make modifications to the part and/or the documentation of the part, in order to implement improvements. Pasternack reserves the right to make such changes as required. Unless otherwise stated, all specifications are nominal. Pasternack does not make any representation or warranty regarding the suitability of the part described herein for any particular purpose, and Pasternack does not assume any liability arising out of the use of any part or documentation.

Pasternack Enterprises, Inc. • P.O. Box 16759, Irvine, CA 92623
Phone: (866) 727-8376 or (949) 261-1920 • **Fax:** (949) 261-7451
Sales@Pasternack.com • Techsupport@Pasternack.com

© 2019 Pasternack Enterprises All Rights Reserved

PE4230 CAD Drawing

HN Male Right Angle Connector Clamp/Solder Attachment for
RG213, RG8, RG393, RG225, RG214, RG393, RG9

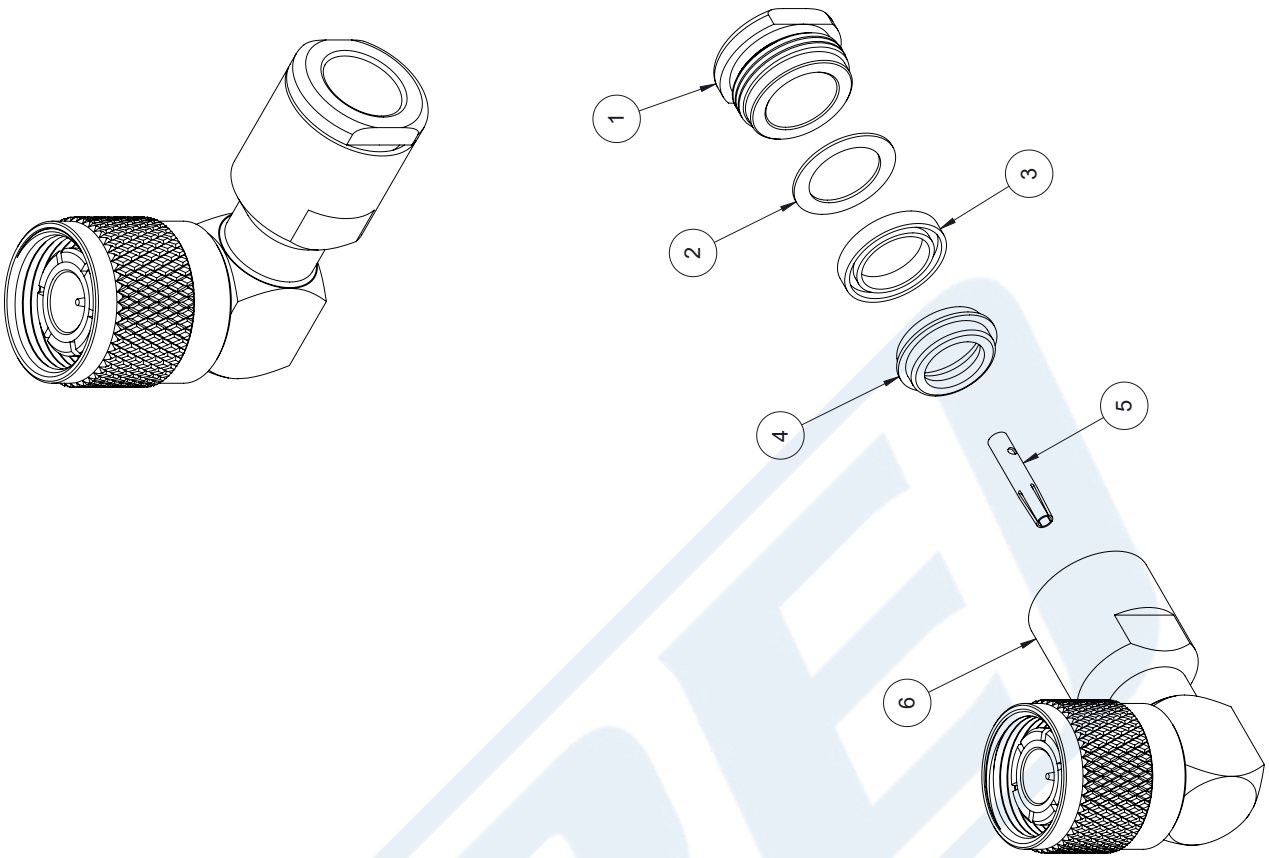

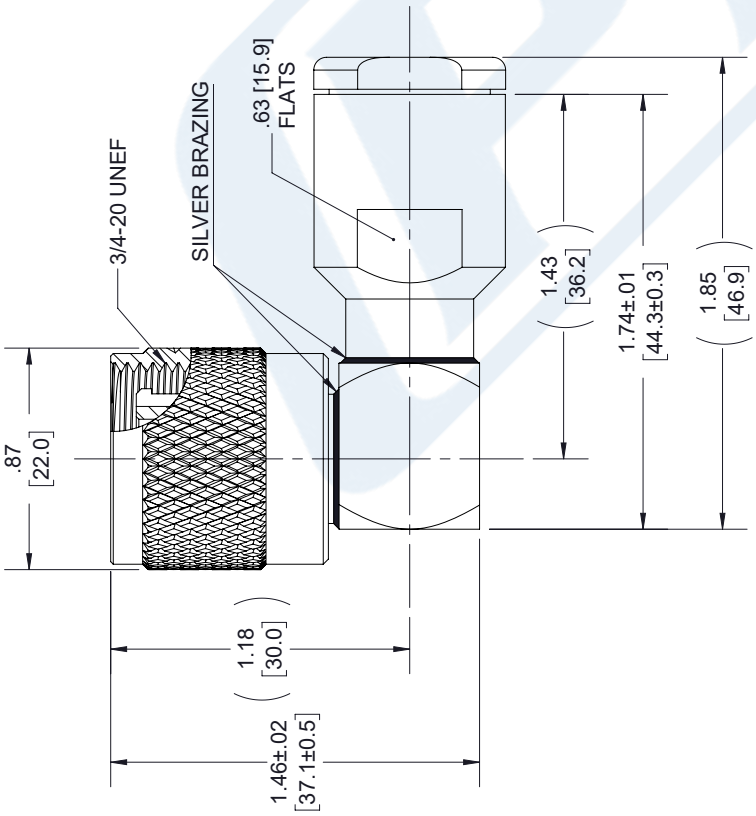

STANDARD TOLERANCES	
.X	±0.2
.XX	±0.01
.XXX	±0.005

*STANDARD TOLERANCES APPLY ONLY TO DIMENSIONS IN INCHES

NOTES:
1. UNLESS OTHERWISE SPECIFIED ALL DIMENSIONS ARE NOMINAL.
2. ALL SPECIFICATIONS ARE SUBJECT TO CHANGE WITHOUT NOTICE AT ANY TIME
3. DIMENSIONS ARE IN INCHES [mm].

DWG TITLE PE4230

CAD FILE 102517 | SCALE N/A | SIZE A | 7361

CAGE CODE 53919

PASTERNACK® THE ENGINEER'S RF SOURCE
Pasternack Enterprises, Inc.
P.O. Box 16759 | Irvine | CA | 92623
Phone: (949) 261-1920 | **Fax:** (949) 261-7451
Website: www.pasternack.com | **E-Mail:** sales@pasternack.com

© 2019 Pasternack Enterprises All Rights Reserved

PASTERNACK
an INFINITE brand

N Male Right Angle Connector Clamp/Solder Attachment for RG213, RG8, RG215, RG225, RG214, RG393

RF Connectors
Technical Data Sheet

PE4136

Configuration

- N Male Connector
- MIL-STD-348A
- 50 Ohms
- Right Angle Body Geometry
- Connector Interface Types: RG213, RG8, RG215, RG225, RG214, RG393

Features

- Max. Operating Frequency 2 GHz
- Gold Plated Brass Contact
- 30 µin minimum contact plating

Applications

- General Purpose Test
- Custom Cable Assemblies

Description

Pasternack's PE4136 type N male right angle connector with clamp/solder attachment for RG213, RG8, RG215, RG225, RG214 and RG393 is part of our full line of RF components available for same-day shipping. Our type N male connector operates up to a maximum frequency of 2 GHz. Its right angle body geometry allows for easier connections in tight spaces.

Our type N male right angle connector PE4136 datasheet specifications and drawing with dimensions are shown below in this PDF. Pasternack's broad catalog of RF, microwave and millimeter wave connectors allows designers to configure and customize their signal connections however they like. Whether the need is to provide an I/O for a board design, or simply create a custom cable assembly configuration, Pasternack has the right connector for the job. Pasternack can also expertly build your custom cable assemblies for you and ship same-day.

Electrical Specifications

Description	Minimum	Typical	Maximum	Units
Frequency Range	DC		2	GHz
Operating Voltage (AC)			1,000	Vrms
Dielectric Withstanding Voltage (AC)			2,500	Vrms

Mechanical Specifications

Size	
Length	1.96 in [49.78 mm]
Width/Dia.	0.827 in [21.01 mm]
Height	1.295 in [32.89 mm]
Weight	0.18 lbs [81.65 g]

Click the following link (or enter part number in "SEARCH" on website) to obtain additional part information including price, inventory and certifications: N Male Right Angle Connector Clamp/Solder Attachment for RG213, RG8, RG215, RG225, RG214, RG393 PE4136

Pasternack Enterprises, Inc. • P.O. Box 16759, Irvine, CA 92623
Phone: (866) 727-8376 or (949) 261-1920 • **Fax:** (949) 261-7451
Sales@Pasternack.com • Techsupport@Pasternack.com

© 2020 Pasternack Enterprises All Rights Reserved

N Male Right Angle Connector Clamp/Solder Attachment for RG213, RG8, RG215, RG225, RG214, RG393

Material Specifications

Description	Material	Plating
Contact	Brass	Gold 30 µin minimum
Insulation	PTFE	
Body	Brass	Nickel 100 µin minimum
Coupling Nut	Brass	Nickel 100 µin minimum

Mechanical Specification Notes:
When attaching the connector to the cable use a clamp torque value of 60 to 65 in-lbs [6.78 to 7.34 Nm]

Environmental Specifications

Temperature

Operating Range -65 to +165 deg C

Compliance Certifications (see product page for current document)

Plotted and Other Data

Notes:

N Male Right Angle Connector Clamp/Solder Attachment for RG213, RG8, RG215, RG225, RG214, RG393 from Pasternack Enterprises has same day shipment for domestic and International orders. Our RF, microwave and millimeter wave products maintain a 99.4% availability and are part of the broadest selection in the industry.

Click the following link (or enter part number in “SEARCH” on website) to obtain additional part information including price, inventory and certifications: N Male Right Angle Connector Clamp/Solder Attachment for RG213, RG8, RG215, RG225, RG214, RG393 PE4136

URL: https://www.pasternack.com/n-male-rg213-rg8-rg215-rg225-rg214-rg393-connector-pe4136-p.aspx

The information contained in this document is accurate to the best of our knowledge and representative of the part described herein. It may be necessary to make modifications to the part and/or the documentation of the part, in order to implement improvements. Pasternack reserves the right to make such changes as required. Unless otherwise stated, all specifications are nominal. Pasternack does not make any representation or warranty regarding the suitability of the part described herein for any particular purpose, and Pasternack does not assume any liability arising out of the use of any part or documentation.

Pasternack Enterprises, Inc. • P.O. Box 16759, Irvine, CA 92623
Phone: (866) 727-8376 or (949) 261-1920 • **Fax:** (949) 261-7451
Sales@Pasternack.com • Techsupport@Pasternack.com

© 2020 Pasternack Enterprises All Rights Reserved

PE4136 CAD Drawing

N Male Right Angle Connector Clamp/Solder Attachment for
RG213, RG8, RG215, RG225, RG214, RG393

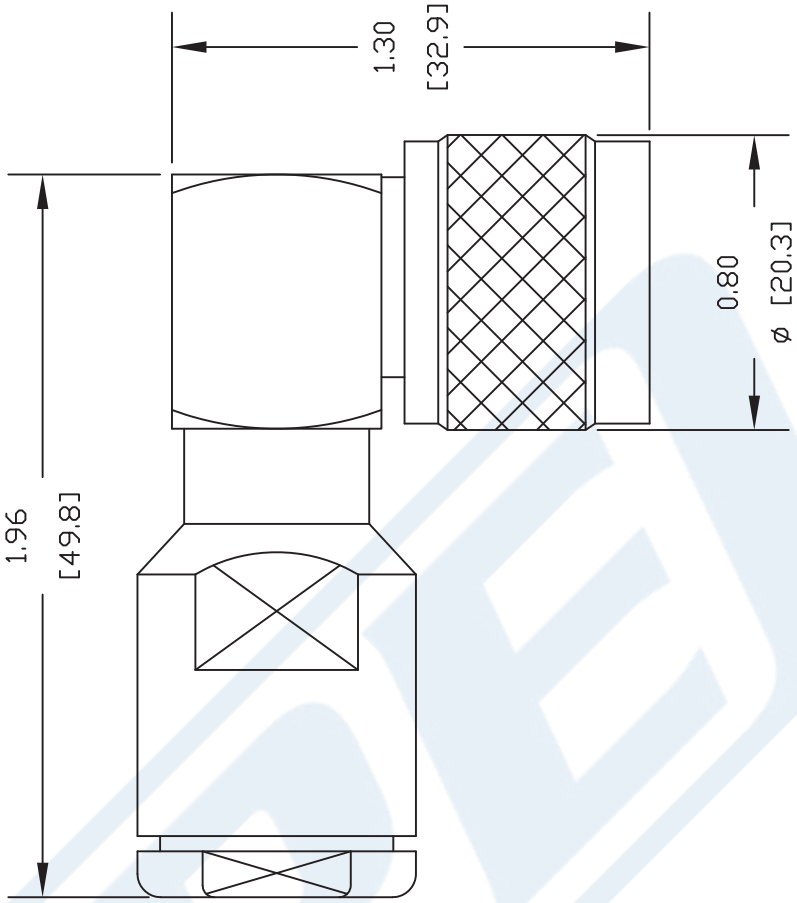

ASSEMBLY PROCEDURES

1. SLIDE CLAMP NUT (1), WASHER (2) & GASKET (3) OVER CABLE. STRIP CABLE AS SHOWN. DO NOT NICK BRAID WHILE CUTTING JACKET. TAPER END OF BRAID TO PERMIT ASSEMBLY OF BRAID CLAMP (4) SLIDE BRAID CLAMP(4) OVER BRAID & SEAT AGAINST JACKET.

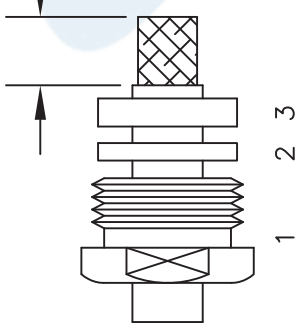

2. FORM BRAID OVER CLAMP NUT (4). TRIM BRAID BACK TO SHOULDER. CUT DIELECTRIC TO DIMENSION SHOWN. DO NOT NICK CENTER CONDUCTOR. SOLDER CONTACT TO CENTER CONDUCTOR. REMOVE EXCESS SOLDER. DO NOT OVER HEAT DIELECTRIC. INSERT CABLE ASSEMBLY INTO BODY & TIGHTEN.

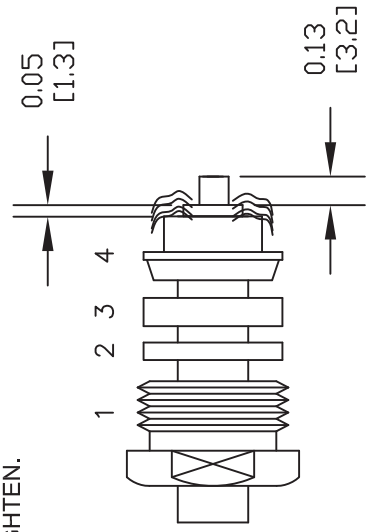

NOTES:
1. UNLESS OTHERWISE SPECIFIED ALL DIMENSIONS ARE NOMINAL.
2. ALL SPECIFICATIONS ARE SUBJECT TO CHANGE WITHOUT NOTICE AT ANY TIME.
3. DIMENSIONS ARE IN INCHES [mm].
4. FITS MIL-C-17 AND EQUIVALENT CABLES.

DWG TITLE PE4136

REV. -	FSCM NO. 53919	CAD FILE 122904	SCALE N/A	SIZE A	127

PASTERNACK®
Pasternack Enterprises, Inc.
P.O. Box 16759 | Irvine | CA | 92623
Phone: (949) 261-1920 | **Fax:** (949) 261-7451
Website: www.pasternack.com | **E-Mail:** sales@pasternack.com

© 2020 Pasternack Enterprises All Rights Reserved

PASTERNACK®
THE ENGINEER'S RF SOURCE

Flexible RG213 Coax Cable Single Shielded with Black PVC Jacket

TECHNICAL DATA SHEET RG213/U

Configuration

Inner Conductor Material and Plating	Copper
Dielectric Type	PE
Shield Materials	Copper Braid
Jacket Material and Color	PVC, Black

Electrical Specifications

Impedance, Ohms	50
Velocity of Propagation, %	66
Maximum Operating Frequency, MHz	1000
Capacitance, pF/ft [pF/m]	30.8 [101.05]

Electrical Specifications by Frequency

Frequency 1

Frequency, MHz	100
Attenuation, dB/100ft [dB/100m]	2.1 [6.89]

Frequency 2

Frequency, MHz	400
Attenuation, dB/100ft [dB/100m]	4.8 [15.75]

Frequency 3

Frequency, MHz	1000
Attenuation, dB/100ft [dB/100m]	8 [26.25]

Mechanical Specifications

Inner Conductor

Number of Strands	7
Material	Copper
Diameter, in [mm]	0.09 [2.29]

Dielectric:

Type	PE
Diameter, in [mm]	0.285 [7.24]

Shield:

Number of	1
Material 1	Copper Braid
Diameter, in [mm]	0.314 [7.98]

Click the following link (or enter part number in "SEARCH" on website) to obtain additional part information including price, inventory and certifications: Flexible RG213 Coax Cable Single Shielded with Black PVC Jacket RG213/U

Pasternack Enterprises, Inc. • P.O. Box 16759, Irvine, CA 92623
Phone: (866) 727-8376 or (949) 261-1920 • **Fax:** (949) 261-7451
Sales@Pasternack.com • Techsupport@Pasternack.com

© 2015 Pasternack Enterprises All Rights Reserved

Flexible RG213 Coax Cable Single Shielded with Black PVC Jacket

Jacket:

Material	PVC
Diameter, in [mm]	0.405 [10.29]
Color	Black
Weight, lbs/ft [Kg/m]	0.115 [0.17]

Compliance Certifications (visit www.Pasternack.com for current document)

RoHS Compliant	
REACH Compliant	06/18/2012

Plotted and Other Data

Notes:

- Values at +25 °C, sea level
- Max. Operating Voltage(VRMS): 5000

Flexible RG213 Coax Cable Single Shielded with Black PVC Jacket from Pasternack Enterprises has same day shipment for domestic and International orders. Our RF, microwave and millimeter wave products maintain a 99% availability and are part of the broadest selection in the industry.

Click the following link (or enter part number in "SEARCH" on website) to obtain additional part information including price, inventory and certifications: Flexible RG213 Coax Cable Single Shielded with Black PVC Jacket RG213/U

URL: http://www.pasternack.com/flexible-0.405-rg213-50-ohm-coax-cable-pvc-jacket-rg213-u-p.aspx

The information contained in this document is accurate to the best of our knowledge and representative of the part described herein. It may be necessary to make modifications to the part and/or the documentation of the part, in order to implement improvements. Pasternack reserves the right to make such changes as required. Unless otherwise stated, all specifications are nominal. Pasternack does not make any representation or warranty regarding the suitability of the part described herein for any particular purpose, and Pasternack does not assume any liability arising out of the use of any part or documentation.

Pasternack Enterprises, Inc. • P.O. Box 16759, Irvine, CA 92623
Phone: (866) 727-8376 or (949) 261-1920 • **Fax:** (949) 261-7451
Sales@Pasternack.com • Techsupport@Pasternack.com

© 2015 Pasternack Enterprises All Rights Reserved

RG213/U CAD Drawing

Flexible RG213 Coax Cable Single Shielded with Black PVC Jacket

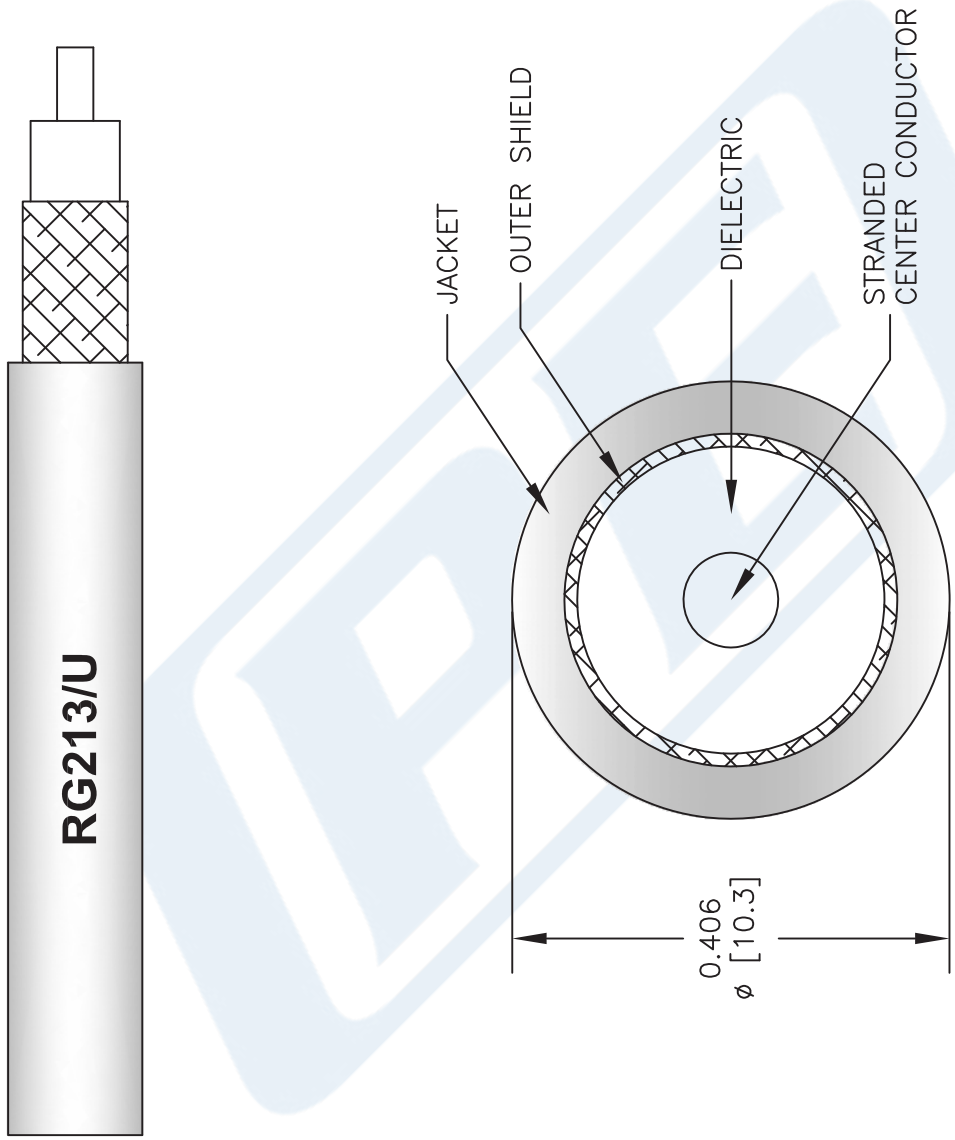

NOTES:
1. UNLESS OTHERWISE SPECIFIED ALL DIMENSIONS ARE NOMINAL.
2. ALL SPECIFICATIONS ARE SUBJECT TO CHANGE WITHOUT NOTICE AT ANY TIME.
3. DIMENSIONS ARE IN INCHES [mm].

DWG TITLE
RG213/U

FSCM NO. 53919

CAD FILE 061312-B | SCALE N/A | SIZE A | 2233

PASTERNACK®
Pasternack Enterprises, Inc.
P.O. Box 16759 | Irvine | CA | 92623
Phone: (949) 261-1920 | **Fax:** (949) 261-7451
Website: www.pasternack.com | **E-Mail:** sales@pasternack.com

© 2015 Pasternack Enterprises All Rights Reserved