PASTERNACK®
THE ENGINEER'S RF SOURCE

SHV Jack Bulkhead Connector Clamp/Solder Attachment For RG58, RG55, RG141, RG142, RG223, RG400, .480 inch D Hole

Configuration

- SHV Jack Connector
- MIL-STD-348
- 50 Ohms
- Straight Body Geometry
- RG58, RG142, RG223, RG400, RG141, RG303, RG55, LMR-400, PE-C195, PE-P195 Interface Type
- Clamp/Solder Attachment
- Bulkhead

Features

- Silver Plated Brass Contact
- Contact plating according to ASTM-B700

Applications

- General Purpose Test
- Rack and Panel Mount Applications
- Custom Cable Assemblies

Description

Pasternack's PE44080 SHV jack bulkhead connector with clamp/solder attachment for RG58, RG142, RG223, RG400, RG141, RG303, RG55, LMR-400, PE-C195 and PE-P195 (.480 inch D hole) is part of our full line of RF components available for same-day shipping. This SHV bulkhead connector allows designers to create external connections on their product enclosures, and can be used in a variety of other rack mount and panel mount applications.

Our SHV jack bulkhead connector PE44080 datasheet specifications and drawing with dimensions are shown below in this PDF. Pasternack's broad catalog of RF, microwave and millimeter wave connectors allows designers to configure and customize their signal connections however they like. Whether the need is to provide an I/O for a board design, or simply create a custom cable assembly configuration, Pasternack has the right connector for the job. Pasternack can also expertly build your custom cable assemblies for you and ship same-day.

Electrical Specifications

Description	Minimum	Typical	Maximum	Units
Operating Voltage (AC)			3,500	Vrms
Dielectric Withstanding Voltage (AC)			5,000	Vrms

Mechanical Specifications

Size	
Length	1.83 in [46.48 mm]
Width/Dia.	0.687 in [17.45 mm]
Weight	0.069 lbs [31.3 g]

Click the following link (or enter part number in "SEARCH" on website) to obtain additional part information including price, inventory and certifications: SHV Jack Bulkhead Connector Clamp/Solder Attachment For RG58, RG55, RG141, RG142, RG223, RG400, .480 inch D Hole PE44080

Pasternack Enterprises, Inc. • P.O. Box 16759, Irvine, CA 92623
Phone: (866) 727-8376 or (949) 261-1920 • **Fax:** (949) 261-7451
Sales@Pasternack.com • Techsupport@Pasternack.com

© 2017 Pasternack Enterprises All Rights Reserved

SHV Jack Bulkhead Connector Clamp/Solder Attachment For RG58, RG55, RG141, RG142, RG223, RG400, .480 inch D Hole

Material Specifications

Description	Material	Plating
Contact	Brass	Silver ASTM-B700
Insulation	PTFE	
Body	Brass	Nickel ASTM-B689

Environmental Specifications

Temperature

Operating Range -65 to +165 deg C

Compliance Certifications (see product page for current document)

Plotted and Other Data

Notes:

Assembly Instruction

SHV Jack Bulkhead Connector Clamp/Solder Attachment For RG58, RG55, RG141, RG142, RG223, RG400, .480 inch D Hole from Pasternack Enterprises has same day shipment for domestic and International orders. Our RF, microwave and millimeter wave products maintain a 99.4% availability and are part of the broadest selection in the industry.

Click the following link (or enter part number in "SEARCH" on website) to obtain additional part information including price, inventory and certifications: SHV Jack Bulkhead Connector Clamp/Solder Attachment For RG58, RG55, RG141, RG142, RG223, RG400, .480 inch D Hole PE44080

URL: https://www.pasternack.com/shv-jack-standard-rg58-rg55-rg141-rg142-rg223-rg400-connector-pe44080-p.aspx

The information contained in this document is accurate to the best of our knowledge and representative of the part described herein. It may be necessary to make modifications to the part and/or the documentation of the part, in order to implement improvements. Pasternack reserves the right to make such changes as required. Unless otherwise stated, all specifications are nominal. Pasternack does not make any representation or warranty regarding the suitability of the part described herein for any particular purpose, and Pasternack does not assume any liability arising out of the use of any part or documentation.

Pasternack Enterprises, Inc. • P.O. Box 16759, Irvine, CA 92623
Phone: (866) 727-8376 or (949) 261-1920 • **Fax:** (949) 261-7451
Sales@Pasternack.com • Techsupport@Pasternack.com

© 2017 Pasternack Enterprises All Rights Reserved

PE44080 CAD Drawing

SHV Jack Bulkhead Connector Clamp/Solder Attachment For RG58, RG55, RG141, RG142, RG223, RG400, .480 inch D Hole

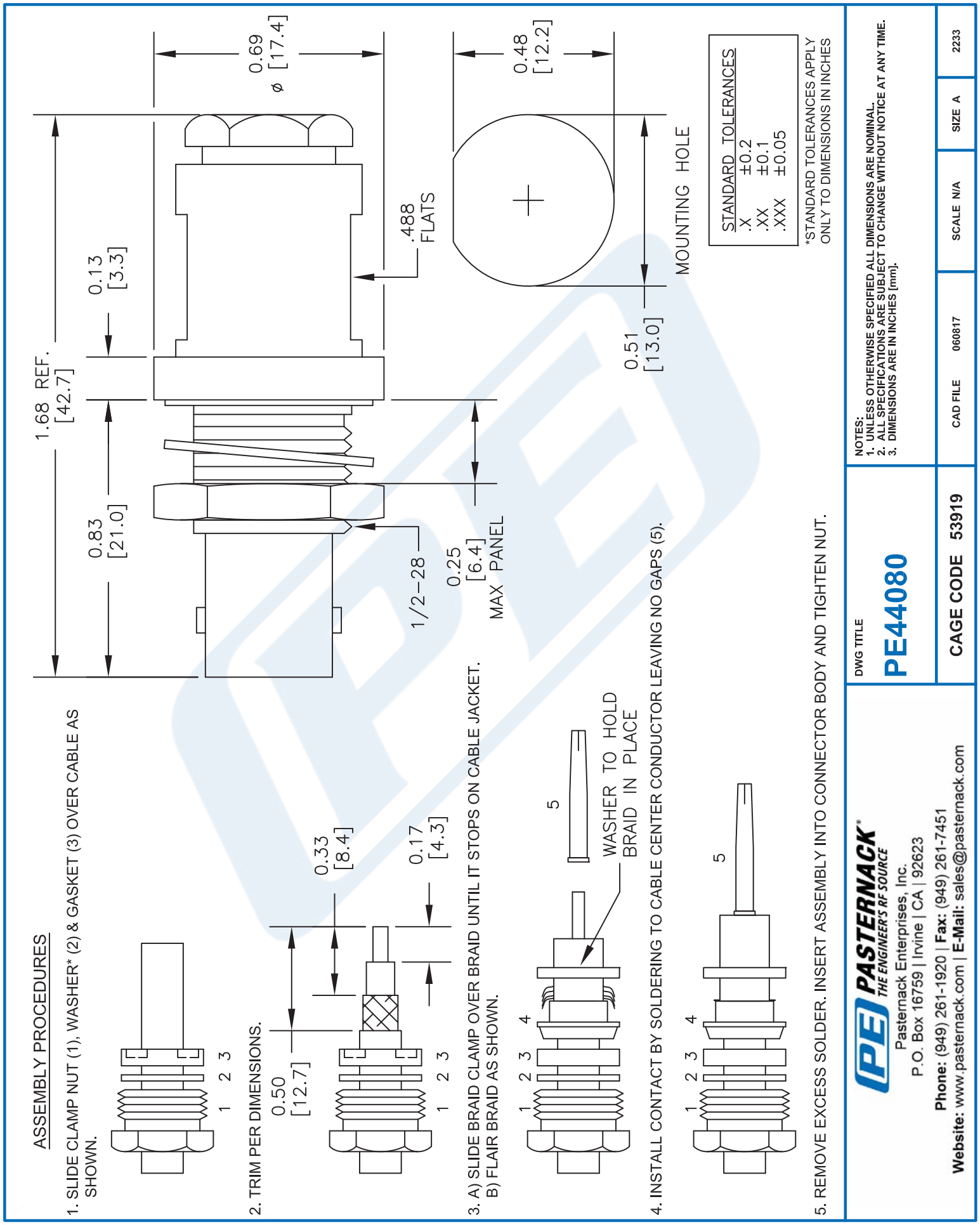

© 2017 Pasternack Enterprises All Rights Reserved

PASTERNACK
an INFINITE brand

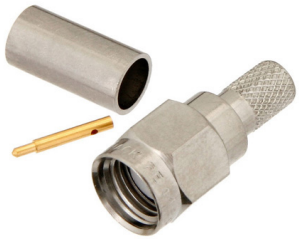

SMA Male Connector Crimp/Solder Attachment for RG58, RG303, RG141, PE-C195, LMR-195, 0.195 inch

RF Connectors
Technical Data Sheet

PE4215

Configuration

- SMA Male Connector
- MIL-STD-348A
- 50 Ohms
- Straight Body Geometry
- Connector Interface Types: RG58, RG303, RG141, PE-C195, LMR-195, 0.195 inch
- 5/16 inch Hex

Features

- Max. Operating Frequency 12.4 GHz
- Good VSWR of 1.5:1
- Gold Plated Brass Contact
- 50 µin minimum contact plating

Applications

- General Purpose Test
- Custom Cable Assemblies

Description

Pasternack's PE4215 SMA male connector with crimp/solder attachment for RG58, RG303, RG141, PE-C195, LMR-195 and 0.195 inch is part of our full line of RF components available for same-day shipping. Our SMA male connector operates up to a maximum frequency of 12.4 GHz and offers good VSWR of 1.5:1.

Our SMA male connector PE4215 datasheet specifications and drawing with dimensions are shown below in this PDF. Pasternack's broad catalog of RF, microwave and millimeter wave connectors allows designers to configure and customize their signal connections however they like. Whether the need is to provide an I/O for a board design, or simply create a custom cable assembly configuration, Pasternack has the right connector for the job. Pasternack can also expertly build your custom cable assemblies for you and ship same-day.

Electrical Specifications

Description	Minimum	Typical	Maximum	Units
Frequency Range	DC		12.4	GHz
VSWR			1.5:1	
Operating Voltage (AC)			500	Vrms
Dielectric Withstanding Voltage (AC)			1,000	Vrms

Mechanical Specifications

Size	
Length	0.906 in [23.01 mm]
Width/Dia.	0.315 in [8.00 mm]
Weight	0.016 lbs [7.26 g]
Mating Torque	3 to 5 in-lbs [0.34 to 0.57 Nm]

Click the following link (or enter part number in "SEARCH" on website) to obtain additional part information including price, inventory and certifications: SMA Male Connector Crimp/Solder Attachment for RG58, RG303, RG141, PE-C195, LMR-195, 0.195 inch PE4215

Pasternack Enterprises, Inc. • P.O. Box 16759, Irvine, CA 92623
Phone: (866) 727-8376 or (949) 261-1920 • **Fax:** (949) 261-7451
Sales@Pasternack.com • Techsupport@Pasternack.com

© 2020 Pasternack Enterprises All Rights Reserved

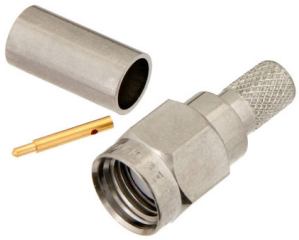

SMA Male Connector Crimp/Solder Attachment for RG58, RG303, RG141, PE-C195, LMR-195, 0.195 inch

Material Specifications

Description	Material	Plating
Contact	Brass	Gold 50 µin minimum
Insulation	PTFE	
Body	Brass	Nickel 100 µin minimum
Coupling Nut	Brass	Nickel 100 µin minimum
Crimp Sleeve	Brass	Nickel

Environmental Specifications

Temperature

Operating Range -65 to +165 deg C

Compliance Certifications (see product page for current document)

Plotted and Other Data

Notes:

SMA Male Connector Crimp/Solder Attachment for RG58, RG303, RG141, PE-C195, LMR-195, 0.195 inch from Pasternack Enterprises has same day shipment for domestic and International orders. Our RF, microwave and millimeter wave products maintain a 99.4% availability and are part of the broadest selection in the industry.

Click the following link (or enter part number in “SEARCH” on website) to obtain additional part information including price, inventory and certifications: SMA Male Connector Crimp/Solder Attachment for RG58, RG303, RG141, PE-C195, LMR-195, 0.195 inch PE4215

URL: https://www.pasternack.com/sma-male-standard-rg58-connector-pe4215-p.aspx

The information contained in this document is accurate to the best of our knowledge and representative of the part described herein. It may be necessary to make modifications to the part and/or the documentation of the part, in order to implement improvements. Pasternack reserves the right to make such changes as required. Unless otherwise stated, all specifications are nominal. Pasternack does not make any representation or warranty regarding the suitability of the part described herein for any particular purpose, and Pasternack does not assume any liability arising out of the use of any part or documentation.

Pasternack Enterprises, Inc. • P.O. Box 16759, Irvine, CA 92623
Phone: (866) 727-8376 or (949) 261-1920 • **Fax:** (949) 261-7451
Sales@Pasternack.com • Techsupport@Pasternack.com

© 2020 Pasternack Enterprises All Rights Reserved

PE4215 CAD Drawing

SMA Male Connector Crimp/Solder Attachment for RG58, RG303, RG141, PE-C195, LMR-195, 0.195 inch

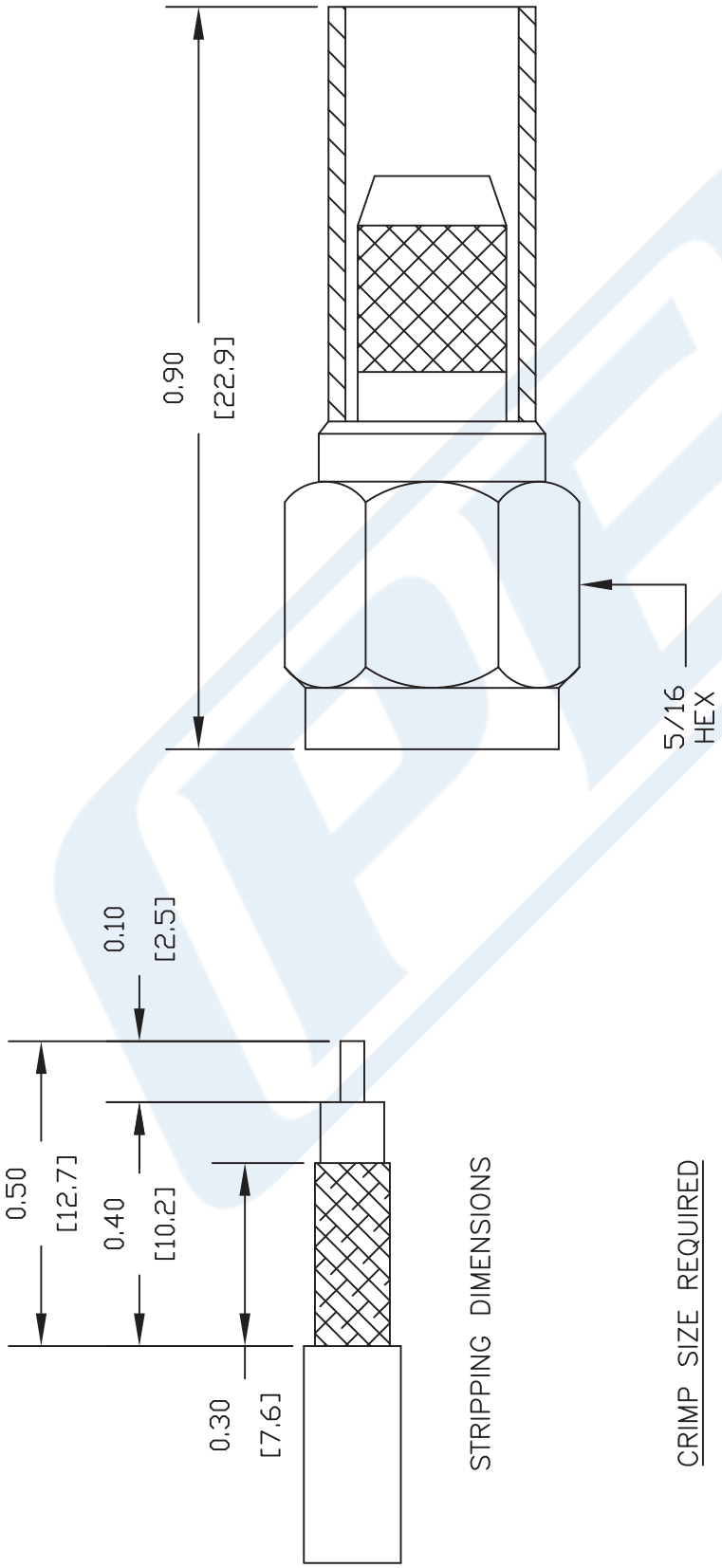

NOTES:
1. UNLESS OTHERWISE SPECIFIED ALL DIMENSIONS ARE NOMINAL.
2. ALL SPECIFICATIONS ARE SUBJECT TO CHANGE WITHOUT NOTICE AT ANY TIME.
3. DIMENSIONS ARE IN INCHES [mm].
4. FITS MIL-C-17 AND EQUIVALENT CABLES.

DWG TITLE **PE4215**

REV. -	FSCM NO. 53919	CAD FILE 010611	SCALE N/A	SIZE A	127

PASTERNACK®
Pasternack Enterprises, Inc.
P.O. Box 16759 | Irvine | CA | 92623
Phone: (949) 261-1920 | **Fax:** (949) 261-7451
Website: www.pasternack.com | **E-Mail:** sales@pasternack.com

© 2020 Pasternack Enterprises All Rights Reserved

PASTERNACK®
www.pasternack.com

Flexible RG303 Coax Cable Single Shielded with Tan FEP Jacket

TECHNICAL DATA SHEET RG303/U

Flexible RG303 Coax Cable Single Shielded with Tan FEP Jacket

Configuration

Inner Conductor Material and Plating	Copper Clad Steel, Silver
Dielectric Type	PTFE
Shield Materials	Silver Plated Copper Braid
Jacket Material and Color	FEP, Tan

Electrical Specifications

Impedance, Ohms	50
Maximum Operating Frequency, GHz	3
Capacitance, pF/ft [pF/m]	32 [104.99]
Dielectric Withstanding Voltage, Vrms	5,000

Electrical Specifications by Frequency

Frequency 1

Frequency, MHz	400
Attenuation, dB/100ft [dB/100m]	8.6 [28.22]

Mechanical Specifications

Inner Conductor

Number of Strands	1
Material	Copper Clad Steel
Plating	Silver
Diameter, in [mm]	0.037 [0.94]

Dielectric:

Type	PTFE
Diameter, in [mm]	0.116 [2.95]

Shield:

Number of	1
Material 1	Silver Plated Copper Braid
Diameter, in [mm]	0.146 [3.71]

Jacket:

Material	FEP
Diameter, in [mm]	0.17 [4.32]
Color	Tan
Weight, lbs/ft [Kg/m]	0.039 [0.06]

Click the following link (or enter part number in “SEARCH” on website) to obtain additional part information including price, inventory and certifications: Flexible RG303 Coax Cable Single Shielded with Tan FEP Jacket RG303/U

The information contained in this document is accurate to the best of our knowledge and representative of the part described herein. It may be necessary to make modifications to the part and/or the documentation of the part, in order to implement improvements. Pasternack reserves the right to make such changes as required. Unless otherwise stated, all specifications are nominal.

Pasternack Enterprises, Inc. • P.O. Box 16759, Irvine, CA 92623
Phone: (866) 727-8376 or (949) 261-1920 • **Fax:** (949) 261-7451
Sales@Pasternack.com • Techsupport@Pasternack.com

© 2013 Pasternack Enterprises All Rights Reserved

Flexible RG303 Coax Cable Single Shielded with Tan FEP Jacket

TECHNICAL DATA SHEET RG303/U

Compliance Certifications (visit www.Pasternack.com for current document)

RoHS Compliant	Yes

Plotted and Other Data

Notes:	Values at 25 °C, sea level

Flexible RG303 Coax Cable Single Shielded with Tan FEP Jacket from Pasternack Enterprises has same day shipment for domestic and International orders. Our RF, microwave and fiber optic products maintain a 99% availability and are part of the broadest selection in the industry.

Click the following link (or enter part number in “SEARCH” on website) to obtain additional part information including price, inventory and certifications: Flexible RG303 Coax Cable Single Shielded with Tan FEP Jacket RG303/U

URL: http://www.pasternack.com/flexible-0.170-rg303-50-ohm-coax-cable-fep-jacket-rg303-u-p.aspx

The information contained in this document is accurate to the best of our knowledge and representative of the part described herein. It may be necessary to make modifications to the part and/or the documentation of the part, in order to implement improvements. Pasternack reserves the right to make such changes as required. Unless otherwise stated, all specifications are nominal.

Pasternack Enterprises, Inc. • P.O. Box 16759, Irvine, CA 92623
Phone: (866) 727-8376 or (949) 261-1920 • **Fax:** (949) 261-7451
Sales@Pasternack.com • Techsupport@Pasternack.com

© 2013 Pasternack Enterprises All Rights Reserved

RG303/U CAD Drawing

Flexible RG303 Coax Cable Single Shielded with Tan FEP Jacket

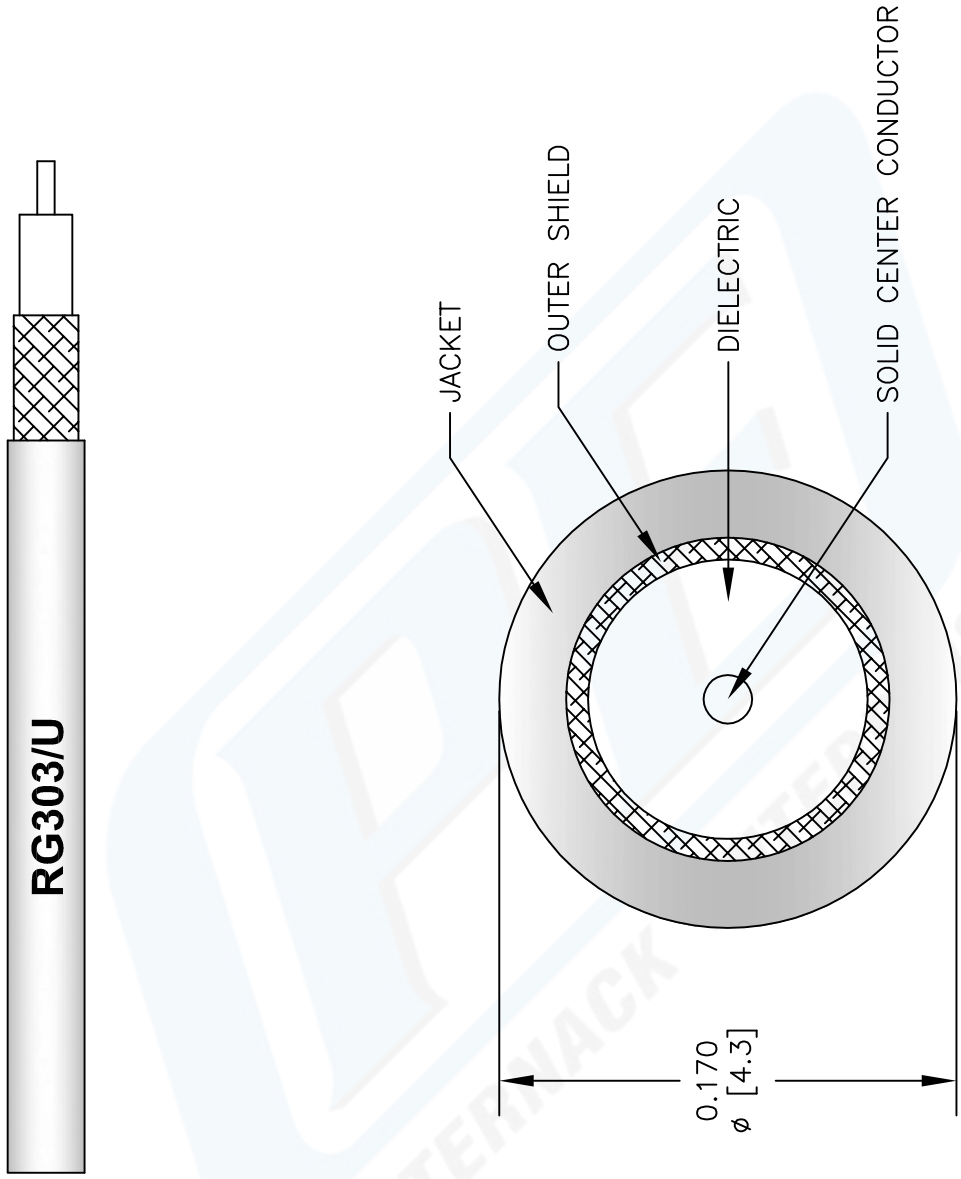

NOTES:
1. UNLESS OTHERWISE SPECIFIED ALL DIMENSIONS ARE NOMINAL.
2. ALL SPECIFICATIONS ARE SUBJECT TO CHANGE WITHOUT NOTICE AT ANY TIME.
3. DIMENSIONS ARE IN INCHES [mm].

DWG TITLE RG303/U

REV. A | FSCM NO. 53919 | CAD FILE 022908-A | SCALE N/A | SIZE A | 147

PASTERNACK®
Pasternack Enterprises, Inc.
P.O. Box 16759 | Irvine | CA | 92623
Phone: (949) 261-1920 | **Fax:** (949) 261-7451
Website: www.pasternack.com | **E-Mail:** sales@pasternack.com

© 2013 Pasternack Enterprises All Rights Reserved