BMA Jack Slide-On Connector Crimp/Solder Attachment 2 Hole Flange Mount for RG316, RG188, RG174, LMR-100A, PE-C100-LSZH

RF Connectors Technical Data Sheet PE45321

Configuration

- Slide-On BMA Jack Connector
- 50 Ohms
- Straight Body Geometry
- RG316, RG188, RG174, LMR-100A, PE-C100-LSZH

Interface Type
- Crimp/Solder Attachment
- 2 Hole Flange

Features

- Max. Operating Frequency 12.4 GHz
- Good VSWR of 1.34:1
- Gold Plated Beryllium Copper Contact
- Blind Mate Connector
- Low-Engagement Force
- Radial and Axial Float Versions

Applications

- General Purpose Test
- Rack and Panel Mount Applications
- Custom Cable Assemblies
- Blind Mating
- Rack and Panel
- Phased Array Systems
- Base Stations
- RF Backplanes
- Test I/O

Description

Pasternack's PE45321 BMA jack slide-on 2 hole flange mount connector with crimp/solder attachment for RG316, RG188, RG174, LMR-100A and PE-C100-LSZH is part of our full line of RF components available for same-day shipping. Our BMA jack connector operates up to a maximum frequency of 12.4 GHz and offers good VSWR of 1.34:1. The Pasternack blind mate connector is ideal for applications where direct visual or tactile access to the connection point is not possible, for example, when two circuit boards need to be mated. This BMA 2 hole flange connector allows designers to create external connections on their product enclosures, and can be used in a variety of other rack mount and panel mount applications.

Our BMA jack 2 hole flange connector PE45321 datasheet specifications and drawing with dimensions are shown below in this PDF. Pasternack's broad catalog of RF, microwave and millimeter wave connectors allows designers to configure and customize their signal connections however they like. Whether the need is to provide an I/O for a board design, or simply create a custom cable assembly configuration, Pasternack has the right connector for the job. Pasternack can also expertly build your custom cable assemblies for you and ship same-day.

Electrical Specifications

Description	Minimum	Typical	Maximum	Units
Frequency Range	DC		12.4	GHz
VSWR			1.34:1	
Insertion Loss			0.1	dB
Operating Voltage (AC)			335	Vrms
Dielectric Withstanding Voltage (AC)			1,000	Vrms
Insulation Resistance	5,000			MOhms

Click the following link (or enter part number in "SEARCH" on website) to obtain additional part information including price, inventory and certifications: BMA Jack Slide-On Connector Crimp/Solder Attachment 2 Hole Flange Mount for RG316, RG188, RG174, LMR-100A, PE-C100-LSZH PE45321

Pasternack Enterprises, Inc. • P.O. Box 16759, Irvine, CA 92623
Phone: (866) 727-8376 or (949) 261-1920 • **Fax:** (949) 261-7451
Sales@Pasternack.com • Techsupport@Pasternack.com

© 2017 Pasternack Enterprises All Rights Reserved

BMA Jack Slide-On Connector Crimp/Solder Attachment 2 Hole Flange Mount for RG316, RG188, RG174, LMR-100A, PE-C100-LSZH

Mechanical Specifications

Size

Length	0.97 in [24.64 mm]
Width/Dia.	0.75 in [19.05 mm]
Weight	0.011 lbs [4.99 g]
Mating Cycles	1,000 Cycles

Material Specifications

Description	Material	Plating
Contact	Beryllium Copper	Gold
Insulation	PTFE	
Outer Conductor	Beryllium Copper	Gold
Body	Brass	Tri-Metal

Mechanical Specification Notes:
Recommended axial float mount for best electricl performance: 0.51 +/- 0.25 mm (.020” +/-.010)

Environmental Specifications

Temperature

Operating Range	-55 to +125 deg C

Click the following link (or enter part number in “SEARCH” on website) to obtain additional part information including price, inventory and certifications: BMA Jack Slide-On Connector Crimp/Solder Attachment 2 Hole Flange Mount for RG316, RG188, RG174, LMR-100A, PE-C100-LSZH PE45321

Pasternack Enterprises, Inc. • P.O. Box 16759, Irvine, CA 92623
Phone: (866) 727-8376 or (949) 261-1920 • **Fax:** (949) 261-7451
Sales@Pasternack.com • Techsupport@Pasternack.com

© 2017 Pasternack Enterprises All Rights Reserved

BMA Jack Slide-On Connector Crimp/Solder Attachment 2 Hole Flange Mount for RG316, RG188, RG174, LMR-100A, PE-C100-LSZH

Compliance Certifications (see product page for current document)

Plotted and Other Data

Notes:

BMA Jack Slide-On Connector Crimp/Solder Attachment 2 Hole Flange Mount for RG316, RG188, RG174, LMR-100A, PE-C100-LSZH from Pasternack Enterprises has same day shipment for domestic and International orders. Our RF, microwave and millimeter wave products maintain a 99.4% availability and are part of the broadest selection in the industry.

Click the following link (or enter part number in “SEARCH” on website) to obtain additional part information including price, inventory and certifications: BMA Jack Slide-On Connector Crimp/Solder Attachment 2 Hole Flange Mount for RG316, RG188, RG174, LMR-100A, PE-C100-LSZH PE45321

URL: https://www.pasternack.com/bma-jack-slide-on-rg316-rg188-rg174-lmr-100a-connector-pe45321-p.aspx

The information contained in this document is accurate to the best of our knowledge and representative of the part described herein. It may be necessary to make modifications to the part and/or the documentation of the part, in order to implement improvements. Pasternack reserves the right to make such changes as required. Unless otherwise stated, all specifications are nominal. Pasternack does not make any representation or warranty regarding the suitability of the part described herein for any particular purpose, and Pasternack does not assume any liability arising out of the use of any part or documentation.

Pasternack Enterprises, Inc. • P.O. Box 16759, Irvine, CA 92623
Phone: (866) 727-8376 or (949) 261-1920 • **Fax:** (949) 261-7451
Sales@Pasternack.com • Techsupport@Pasternack.com

© 2017 Pasternack Enterprises All Rights Reserved

PE45321 CAD Drawing

BMA Jack Slide-On Connector Crimp/Solder Attachment 2 Hole Flange Mount for RG316, RG188, RG174, LMR-100A, PE-C100-LSZH

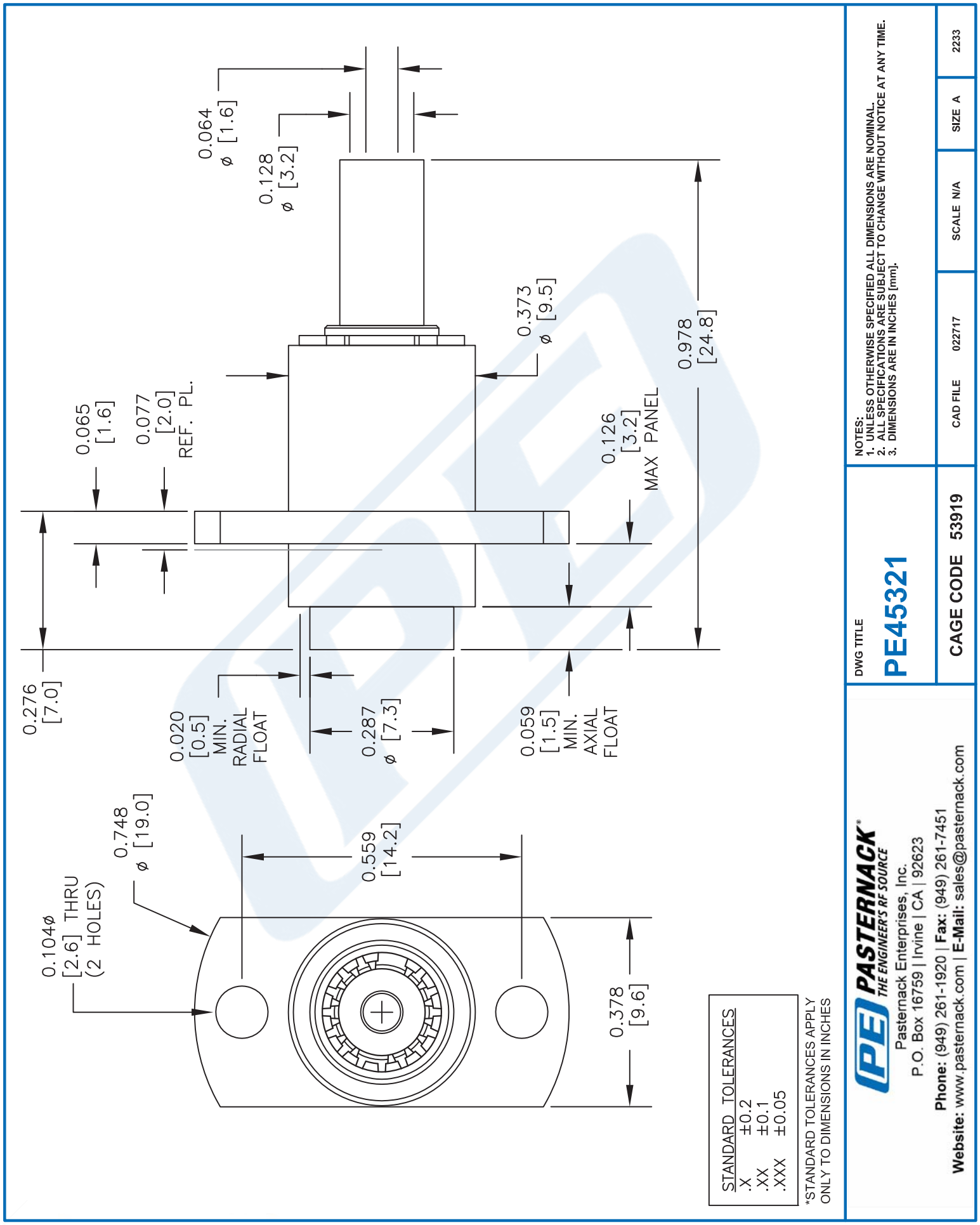

© 2017 Pasternack Enterprises All Rights Reserved

PE45321 CAD Drawing

BMA Jack Slide-On Connector Crimp/Solder Attachment 2 Hole Flange Mount for RG316, RG188, RG174, LMR-100A, PE-C100-LSZH

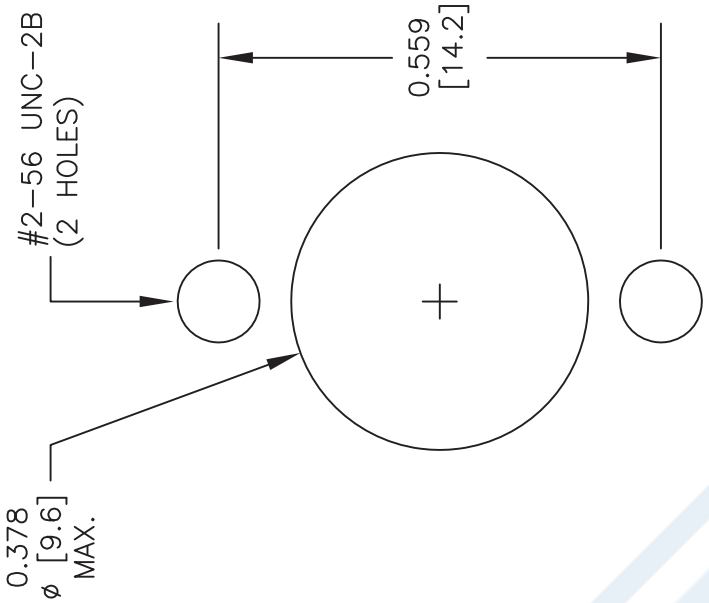

MOUNTING HOLES

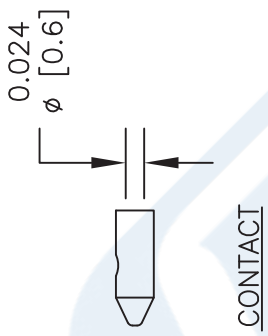

CONTACT

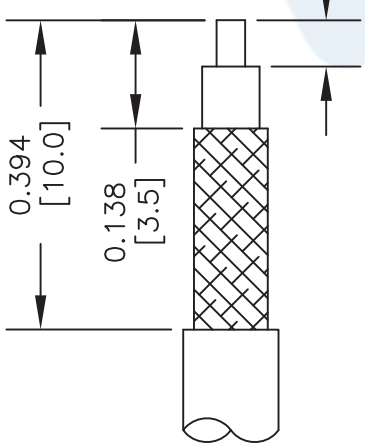

STRIPPING DIMENSIONS

ASSEMBLY PROCEDURES

1. STRIP CABLE TO THE DIMENSIONS SHOWN, DO NOT NICK CENTER CONDUCTOR OR BRAID.
2. SLIDE FERRULE ONTO CABLE.
3. PUSH CENTER CONDUCTOR FULLY INTO CONTACT AND SOLDER, REMOVE ANY EXCESS SOLDER.
4. FLARE BRAID AND INSERT CONTACT INTO THE BODY UNTIL IT SEATS.
5. SLIDE FERRULE OVER BRAID AND CRIMP WITH .128" HEX CRIMP TOOL.

STANDARD TOLERANCES	
.X	±0.2
.XX	±0.1
.XXX	±0.05

*STANDARD TOLERANCES APPLY ONLY TO DIMENSIONS IN INCHES

NOTES:
1. UNLESS OTHERWISE SPECIFIED ALL DIMENSIONS ARE NOMINAL.
2. ALL SPECIFICATIONS ARE SUBJECT TO CHANGE WITHOUT NOTICE AT ANY TIME.
3. DIMENSIONS ARE IN INCHES [mm].

DWG TITLE
PE45321

CAGE CODE 53919

CAD FILE 022717 | SCALE N/A | SIZE A | 2233

PASTERNACK®
THE ENGINEER'S RF SOURCE
Pasternack Enterprises, Inc.
P.O. Box 16759 | Irvine | CA | 92623
Phone: (949) 261-1920 | **Fax:** (949) 261-7451
Website: www.pasternack.com | **E-Mail:** sales@pasternack.com

© 2017 Pasternack Enterprises All Rights Reserved

SMA Female Bulkhead Mount Connector Crimp/Solder Attachment for RG316, RG174, RG188, PE-B100, PE-C100, .100 inch, LMR-100, .235 inch D Hole

PE4427

Configuration

- SMA Female Connector
- MIL-STD-348
- 50 Ohms
- Straight Body Geometry
- Connector Interface Types: RG316, RG174, RG188, PE-B100, PE-C100, .100 inch, LMR-100
- Bulkhead

Features

- Gold Plated Beryllium Copper Contact
- Contact plating according to MIL-G-45204

Applications

- General Purpose Test
- Rack and Panel Mount Applications
- Custom Cable Assemblies

Description

Pasternack's PE4427 , SMA, Standard, Connector is part of our full line of RF components available for same-day shipping. This SMA bulkhead connector allows designers to create external connections on their product enclosures, and can be used in a variety of other rack mount and panel mount applications.

Our SMA female bulkhead connector PE4427 datasheet specifications and drawing with dimensions are shown below in this PDF. Pasternack's broad catalog of RF, microwave and millimeter wave connectors allows designers to configure and customize their signal connections however they like. Whether the need is to provide an I/O for a board design, or simply create a custom cable assembly configuration, Pasternack has the right connector for the job. Pasternack can also expertly build your custom cable assemblies for you and ship same-day.

Electrical Specifications

Description	Minimum	Typical	Maximum	Units
Impedance		50		Ohms

Mechanical Specifications

Size	
Length	0.9 in [22.86 mm]
Width	0.312 in [7.92 mm]
Height	0.312 in [7.92 mm]
Weight	0.008 lbs [3.63 g]
Mating Cycles	500 Cycles

Material Specifications

Description	Material	Plating
Contact	Beryllium Copper	Gold MIL-G-45204
Outer Conductor	Brass	Nickel
Body	Brass	Nickel

© 2023 Infinite Electronics, Inc. Pasternack is a registered trademark of Infinite Electronics, Inc.

SMA Female Bulkhead Mount Connector Crimp/Solder Attachment for RG316, RG174, RG188, PE-B100, PE-C100, .100 inch, LMR-100, .235 inch D Hole

PE4427

Environmental Specifications

Temperature

Compliance Certifications (see product page for current document)

Plotted and Other Data

Notes:

© 2023 Infinite Electronics, Inc. Pasternack is a registered trademark of Infinite Electronics, Inc.

SMA Female Bulkhead Mount Connector Crimp/Solder Attachment for RG316, RG174, RG188, PE-B100, PE-C100, .100 inch, LMR-100, .235 inch D Hole

PE4427

Assembly Instruction

*

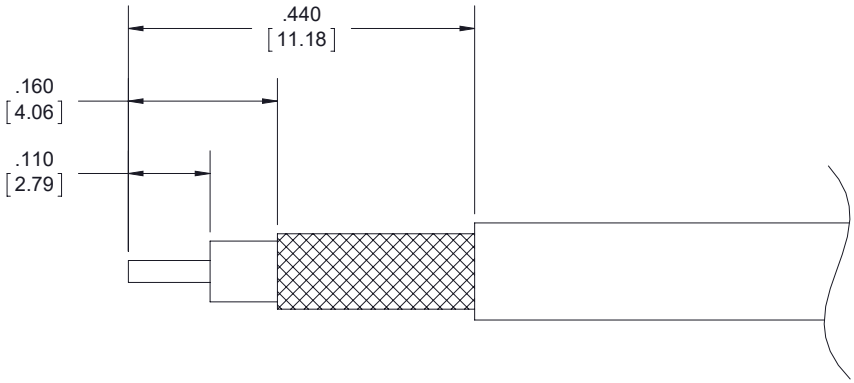

ASSEMBLY PROCEDURES

1. STRIP CABLE TO THE DIMENSIONS SHOWN, DO NOT NICK CENTER CONDUCTOR OR BRAID.
2. SLIDE FERRULE OVER CABLE.
3. PUSH CENTER CONDUCTOR FULLY INTO CONTACT AND SOLDER, REMOVE ANY EXCESS SOLDER.
4. FLAIR BRAID AND INSERT CONTACT INTO THE BODY UNTIL IT SEATS.
5. SLIDE FERRULE OVER BRAID AND CRIMP.

CRIMP SIZE REQUIRED

- FERRULE: A.128" HEX CRIMP TOOL.
- CONTACT: SOLDER.

© 2023 Infinite Electronics, Inc. Pasternack is a registered trademark of Infinite Electronics, Inc.
+1 (866) 558-2786 | sales@pasternack.com | pasternack.com

SMA Female Bulkhead Mount Connector Crimp/Solder Attachment for RG316, RG174, RG188, PE-B100, PE-C100, .100 inch, LMR-100, .235 inch D Hole

PE4427

SMA Female Bulkhead Mount Connector Crimp/Solder Attachment for RG316, RG174, RG188, PE-B100, PE-C100, .100 inch, LMR-100, .235 inch D Hole from Pasternack Enterprises has same day shipment for domestic and International orders. Our RF, microwave and millimeter wave products maintain a 99.4% availability and are part of the broadest selection in the industry.

Click the following link (or enter part number in "SEARCH" on website) to obtain additional part information including price, inventory and certifications: SMA Female Bulkhead Mount Connector Crimp/Solder Attachment for RG316, RG174, RG188, PE-B100, PE-C100, .100 inch, LMR-100, .235 inch D Hole PE4427

URL: https://www.pasternack.com/sma-female-rg316-rg174-pe-b100-pe-c100-.100-connector-pe4427-p.aspx

The information contained within this document is accurate to the best of our knowledge and representative of the part described herein. It may be necessary to make modifications to the part and/or the documentation of the part in order to impliment improvements. Pasternack Enterprises reserves the right to make such changes as required. Unless otherwise stated, all specifications are nominal. Pasternack Enterprises does not make any representation or warranty regarding the suitability of the part described herein for any particular purpose, and Pasternack Enterprises does not assume liability arising out of the use of any part or document.

© 2023 Infinite Electronics, Inc. Pasternack is a registered trademark of Infinite Electronics, Inc.

PE4427 CAD Drawing

SMA Female Bulkhead Mount Connector Crimp/Solder Attachment for RG316, RG174, RG188, PE-B100, PE-C100, .100 inch, LMR-100, .235 inch D Hole

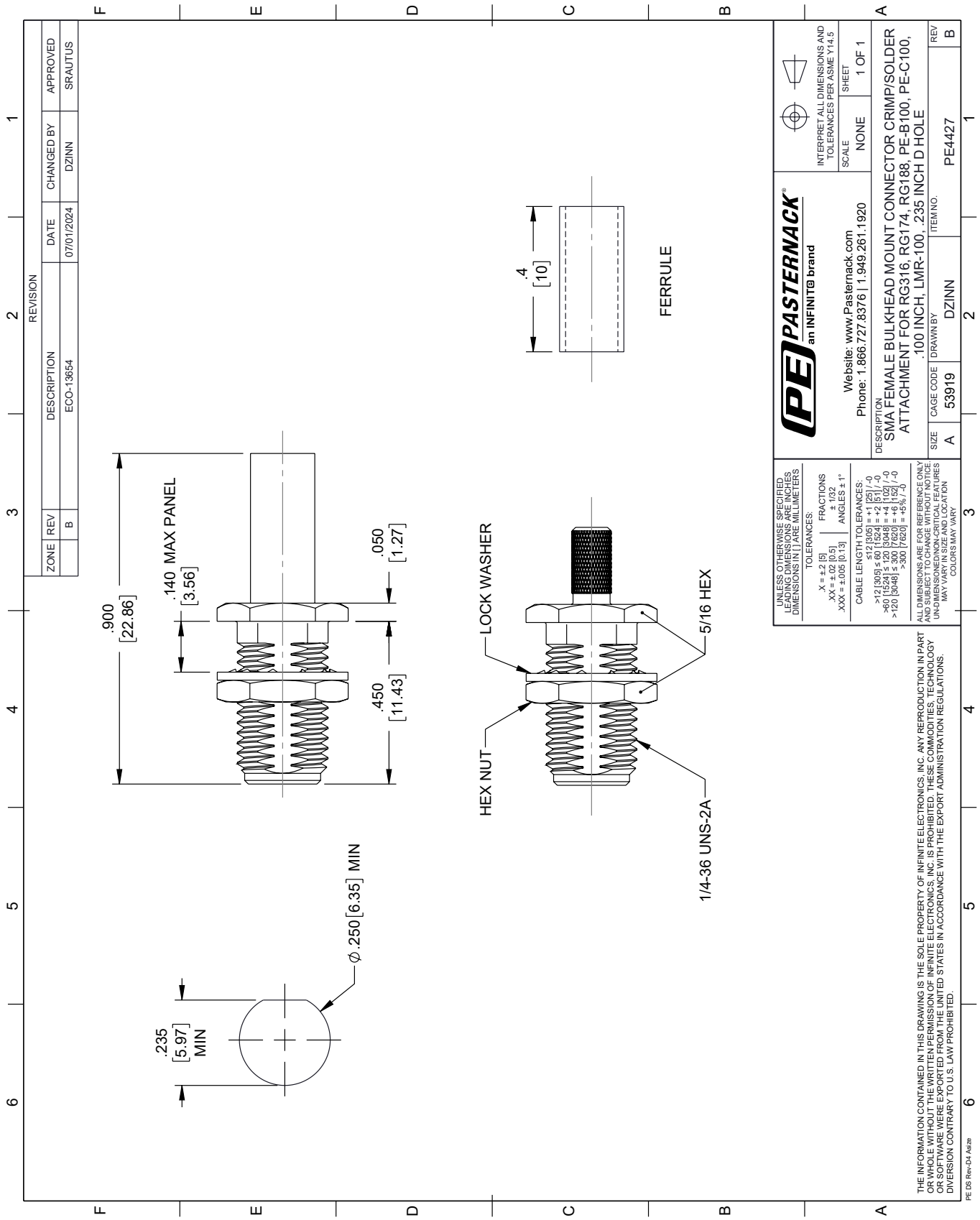

© 2023 Infinite Electronics, Inc. Pasternack is a registered trademark of Infinite Electronics, Inc.

Low Loss Flexible LMR-100A-PVC Indoor/Outdoor Rated Coax Cable Double Shielded with Black PVC Jacket

LMR-100A-PVC

TIMES MICROWAVE SYSTEMS

Times Microwave Systems Connector Specification

Configuration

- Low Loss, Indoor/Outdoor Flexible Cable
- 2 Shield(s)

Features

- Max Operating Frequency of 8 GHz
- Low Loss Cable
- Phase Velocity 66% VoP

Applications

- Laboratory Applications
- General Purpose RF Interconnect

Description

LMR-100A-PVC part number from Pasternack is a LMR-100A-PVC coax cable that is flexible. Pasternack LMR-100A flexible coax cable is 50 Ohm and has a PE dielectric. Our LMR-100A coax is constructed with a 0.11 jacket made of PVC. LMR-100A coax has a shield count of 2, a RF shielding of 90 dB and the maximum frequency for this Pasternack cable is 8 GHz. LMR-100A coax cable has an attenuation at 1 GHz of 24 dB.

Pasternack LMR-100A-PVC coax cables are part of over 40,000 RF, microwave and millimeter wave components. LMR-100A cables and our other RF parts are available for same day shipping worldwide. Custom RF cable assemblies using LMR-100A or other coax can be built and shipped same day as well.

Electrical Specifications

Description	Minimum	Typical	Maximum	Units
Frequency Range	DC		8	GHz
Cutoff Frequency		90		GHz
Impedance		50		Ohms
Velocity of Propagation		66		%
Time Delay		1.54 [5.05]		ns/ft [ns/m]
Shielding Effectiveness	90			dB
Dielectric Withstanding Voltage (DC)			500	Vdc
Jacket Spark			2,000	Vrms
Inner Conductor DC Resistance			81	Ohms/1000ft
Outer Conductor DC Resistance			9.5	Ohms/1000ft
Nominal Capacitance		30.8 [101.05]		pF/ft [pF/m]
Nominal Inductance		0.077 [0.25]		uH/ft [uH/m]
Input Power (Peak)			600	Watts

© 2023 Infinite Electronics, Inc. Pasternack is a registered trademark of Infinite Electronics, Inc.
+1 (866) 558-2786 | sales@pasternack.com | pasternack.com

Low Loss Flexible LMR-100A-PVC Indoor/Outdoor Rated Coax Cable Double Shielded with Black PVC Jacket

LMR-100A-PVC

Performance by Frequency Band

Description	F1	F2	F3	F4	F5	Units
Frequency	50	150	220	450	900	MHz
Attenuation, Typ	3.9	8.9	10.9	15.8	22.8	dB/100ft
	12.8	29.2	35.76	51.84	74.8	dB/100m
Input Power (CW), Max	230	100	83	57	39	Watts

Description	F6	F7	F8	F9	F10	Units
Frequency	1.5	1.8	2	2.5	5.8	GHz
Attenuation, Typ	30.1	33.2	35.2	39.8	64.1	dB/100ft
	98.75	108.92	115.49	130.58	210.3	dB/100m
Input Power (CW), Max	29	27	25	22	13	Watts

Mechanical Specifications

Diameter	0.11 in [2.79 mm}
Weight	0.009 lbs/ft [0.01 kg/m]
Min. Bend Radius (Installation)	0.25 in [6.35 mm]
Min. Bend Radius (Repeated)	1 in [25.4 mm]
Bending Moment	0.1 lbs-ft [0.14 N-m]
Tensile Strength	15 lbs [6.8 kg]
Flat Plate Crush	10 lbs/in [0.18 kg/mm]

Construction Specifications

Description	Material and Plating	Diameter
Inner Conductor	Copper Clad Steel, 1 Strand	0.018 in [0.46 mm]
Conductor Type	Solid	
Dielectric	PE	0.06 in [1.52 mm]
First Shield	Aluminum Tape	
Second Shield	Tinned Copper Braid	
Jacket	PVC, Black	0.11 in [2.79 mm]

Environmental Specifications

Temperature

Operating Range	-40 to 85 deg C
Storage Range	-70 to 85 deg C

Compliance Certifications (see product page for current document)

Plotted and Other Data

Notes:

© 2023 Infinite Electronics, Inc. Pasternack is a registered trademark of Infinite Electronics, Inc.
+1 (866) 558-2786 | sales@pasternack.com | pasternack.com

Low Loss Flexible LMR-100A-PVC Indoor/Outdoor Rated Coax Cable Double Shielded with Black PVC Jacket

LMR-100A-PVC

Low Loss Flexible LMR-100A-PVC Indoor/Outdoor Rated Coax Cable Double Shielded with Black PVC Jacket from Pasternack Enterprises has same day shipment for domestic and International orders. Our RF, microwave and millimeter wave products maintain a 99.4% availability and are part of the broadest selection in the industry.

Click the following link (or enter part number in "SEARCH" on website) to obtain additional part information including price, inventory and certifications: Low Loss Flexible LMR-100A-PVC Indoor/Outdoor Rated Coax Cable Double Shielded with Black PVC Jacket LMR-100A-PVC

URL: https://www.pasternack.com/50-ohm-low-loss-flexible-lmr-100apvc-jacket-double-shielded-lmr-100a-pvc-p.aspx

The information contained within this document is accurate to the best of our knowledge and representative of the part described herein. It may be necessary to make modifications to the part and/or the documentation of the part in order to impliment improvements. Pasternack Enterprises reserves the right to make such changes as required. Unless otherwise stated, all specifications are nominal. Pasternack Enterprises does not make any representation or warranty regarding the suitability of the part described herein for any particular purpose, and Pasternack Enterprises does not assume liability arising out of the use of any part or document.

© 2023 Infinite Electronics, Inc. Pasternack is a registered trademark of Infinite Electronics, Inc.

LMR-100A-PVC CAD Drawing

Low Loss Flexible LMR-100A-PVC Indoor/Outdoor Rated Coax Cable Double Shielded with Black PVC Jacket

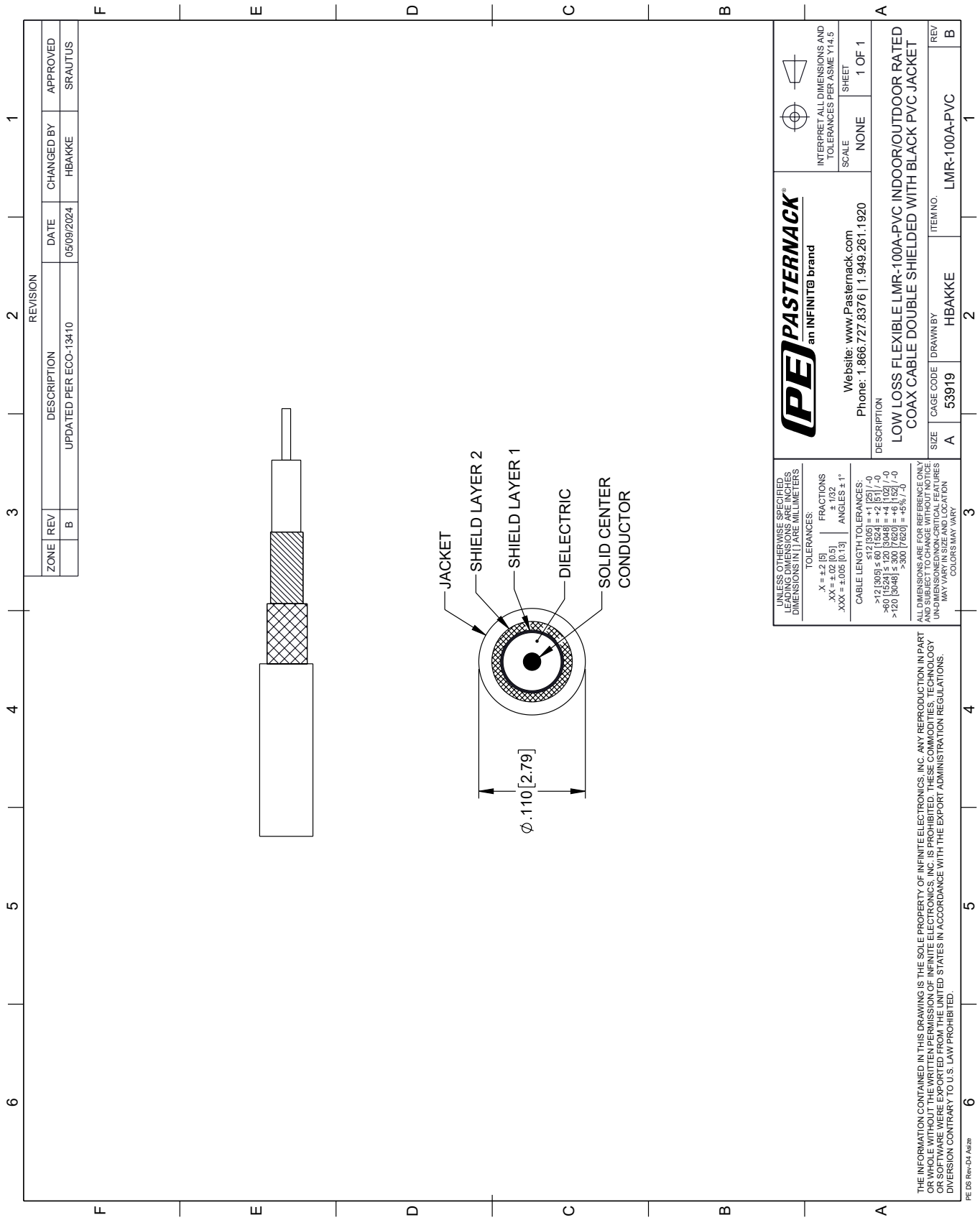

© 2023 Infinite Electronics, Inc. Pasternack is a registered trademark of Infinite Electronics, Inc.