PASTERNACK®
THE ENGINEER'S RF SOURCE

N Male Connector Solder Attachment for PE-047SR, PE-SR047AL, PE-SR047FL

Configuration

- N Male Connector
- MIL-STD-348
- 50 Ohms
- Straight Body Geometry
- PE-047SR, PE-SR047AL, PE-SR047FL Interface Type
- Solder/Solder Attachment

Features

- Gold Plated Contact
- Contact plating according to MIL-G-45204

Applications

- General Purpose Test
- Custom Cable Assemblies

Description

Pasternack's PE4934 type N male connector with solder/solder attachment for PE-047SR, PE-SR047AL and PE-SR047FL is part of our full line of RF components available for same-day shipping.

Our type N male connector PE4934 datasheet specifications and drawing with dimensions are shown below in this PDF. Pasternack's broad catalog of RF, microwave and millimeter wave connectors allows designers to configure and customize their signal connections however they like. Whether the need is to provide an I/O for a board design, or simply create a custom cable assembly configuration, Pasternack has the right connector for the job. Pasternack can also expertly build your custom cable assemblies for you and ship same-day.

Mechanical Specifications

Size

Length	0.957 in [24.31 mm]
Width/Dia.	0.8 in [20.32 mm]
Weight	0.034 lbs [15.42 g]

Material Specifications

Description	Material	Plating
Contact		Gold MIL-G-45204
Insulation	PTFE	
Body	Brass	Gold MIL-G-45204
Coupling Nut	Brass	Nickel QQ-N-290

Click the following link (or enter part number in "SEARCH" on website) to obtain additional part information including price, inventory and certifications: N Male Connector Solder Attachment for PE-047SR, PE-SR047AL, PE-SR047FL PE4934

Pasternack Enterprises, Inc. • P.O. Box 16759, Irvine, CA 92623
Phone: (866) 727-8376 or (949) 261-1920 • **Fax:** (949) 261-7451
Sales@Pasternack.com • Techsupport@Pasternack.com

© 2016 Pasternack Enterprises All Rights Reserved

N Male Connector Solder Attachment for PE-047SR, PE-SR047AL, PE-SR047FL

Environmental Specifications

Temperature

Operating Range	-65 to +165 deg C

Compliance Certifications (see product page for current document)

Plotted and Other Data

Notes:

N Male Connector Solder Attachment for PE-047SR, PE-SR047AL, PE-SR047FL from Pasternack Enterprises has same day shipment for domestic and International orders. Our RF, microwave and millimeter wave products maintain a 99% availability and are part of the broadest selection in the industry.

Click the following link (or enter part number in "SEARCH" on website) to obtain additional part information including price, inventory and certifications: N Male Connector Solder Attachment for PE-047SR, PE-SR047AL, PE-SR047FL PE4934

URL: https://www.pasternack.com/n-male-standard-pe-047sr-pe-sr047al-pe-sr047fl-connector-pe4934-p.aspx

The information contained in this document is accurate to the best of our knowledge and representative of the part described herein. It may be necessary to make modifications to the part and/or the documentation of the part, in order to implement improvements. Pasternack reserves the right to make such changes as required. Unless otherwise stated, all specifications are nominal. Pasternack does not make any representation or warranty regarding the suitability of the part described herein for any particular purpose, and Pasternack does not assume any liability arising out of the use of any part or documentation.

Pasternack Enterprises, Inc. • P.O. Box 16759, Irvine, CA 92623
Phone: (866) 727-8376 or (949) 261-1920 • **Fax:** (949) 261-7451
Sales@Pasternack.com • Techsupport@Pasternack.com

© 2016 Pasternack Enterprises All Rights Reserved

PE4934 CAD Drawing

N Male Connector Solder Attachment for PE-047SR, PE-SR047AL, PE-SR047FL

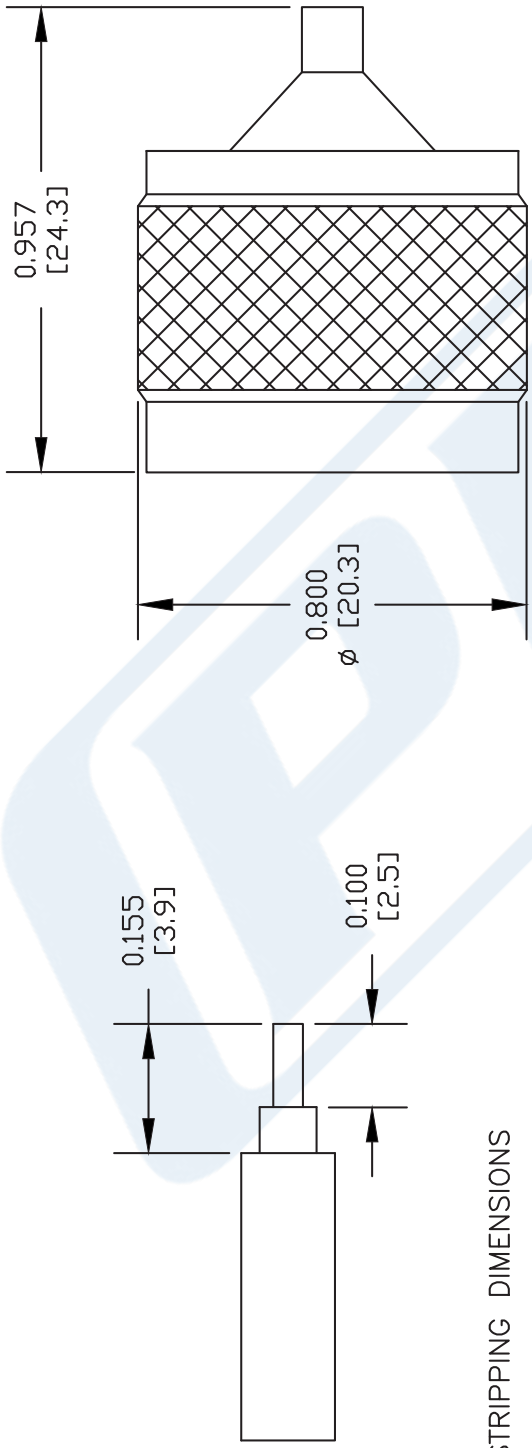

STRIPPING DIMENSIONS

ASSEMBLY PROCEDURES

STRIP CABLE AS SHOWN. DO NOT NICK CENTER CONDUCTOR. SLIDE CABLE THROUGH BODY.

INSERT CENTER CONDUCTOR INTO CONTACT UNTIL DIELECTRIC BOTTOMS INSIDE CONTACT. SOFT SOLDER CONTACT TO CENTER CONDUCTOR. DO NOT OVER HEAT DIELECTRIC.

USING ASSEMBLY TOOL, PRESS CONTACT FULLY INTO INSULATOR. SOLDER OUTER CONDUCTOR TO BODY.

NOTES:
1. UNLESS OTHERWISE SPECIFIED ALL DIMENSIONS ARE NOMINAL.
2. ALL SPECIFICATIONS ARE SUBJECT TO CHANGE WITHOUT NOTICE AT ANY TIME.
3. DIMENSIONS ARE IN INCHES [mm].
4. FITS MIL-C-17 AND EQUIVALENT CABLES.

DWG TITLE
PE4934

FSCM NO. 53919

CAD FILE 042409 | SCALE N/A | SIZE A | XXXX

PASTERNACK®
Pasternack Enterprises, Inc.
P.O. Box 16759 | Irvine | CA | 92623
Phone: (949) 261-1920 | **Fax:** (949) 261-7451
Website: www.pasternack.com | **E-Mail:** sales@pasternack.com

© 2016 Pasternack Enterprises All Rights Reserved

PASTERNACK®
www.pasternack.com

1.85mm Male Precision Connector Clamp/Solder Attachment For PE-047SR, PE-SR047AL, PE-SR047FL

TECHNICAL DATA SHEET PE44799

1.85mm Male Precision Connector Clamp/Solder Attachment For PE-047SR, PE-SR047AL, PE-SR047FL

Configuration

Connector	1.85mm Male
Connector Interface Type	PE-047SR,PE-SR047AL,PE-SR047FL
Cable Attachment Method (Shield/Contact)	Clamp/Solder
Connector Design	Precision
Body Style	Straight

Electrical Specifications

Frequency Range, GHz	DC to 65
Impedance, Ohms	50
Maximum VSWR	1.35:1

Mechanical Specifications

Size

Length, in [mm]	0.585 [14.86]
Width/Dia., in [mm]	0.35 [8.89]

Connector

Type	1.85mm Male
Contact Material and Plating	Beryllium Copper, Gold
Contact Plating Specification	50µ Inches.
Coupling Nut Material and Plating	Passivated Stainless Steel
Coupling Nut Plating Specification	SAE-AMS-2700
Hex Size, Inch	5/16
Torque, in-lbs [Nm]	8 [0.9]
Body Material and Plating	Passivated Stainless Steel
Body Plating Specification	SAE-AMS-2700
Dielectric Type	PEI

Compliance Certifications (visit www.Pasternack.com for current document)

RoHS Compliant	Yes

Click the following link (or enter part number in “SEARCH” on website) to obtain additional part information including price, inventory and certifications: 1.85mm Male Precision Connector Clamp/Solder Attachment For PE-047SR, PE-SR047AL, PE-SR047FL PE44799

The information contained in this document is accurate to the best of our knowledge and representative of the part described herein. It may be necessary to make modifications to the part and/or the documentation of the part, in order to implement improvements. Pasternack reserves the right to make such changes as required. Unless otherwise stated, all specifications are nominal.

Pasternack Enterprises, Inc. • P.O. Box 16759, Irvine, CA 92623
Phone: (866) 727-8376 or (949) 261-1920 • **Fax:** (949) 261-7451
Sales@Pasternack.com • Techsupport@Pasternack.com

© 2013 Pasternack Enterprises All Rights Reserved

1.85mm Male Precision Connector Clamp/Solder Attachment For PE-047SR, PE-SR047AL, PE-SR047FL

Plotted and Other Data

Notes: Values at 25 °C, sea level

1.85mm Male Precision Connector Clamp/Solder Attachment For PE-047SR, PE-SR047AL, PE-SR047FL from Pasternack Enterprises has same day shipment for domestic and International orders. Our RF, microwave and fiber optic products maintain a 99% availability and are part of the broadest selection in the industry.

Click the following link (or enter part number in “SEARCH” on website) to obtain additional part information including price, inventory and certifications: 1.85mm Male Precision Connector Clamp/Solder Attachment For PE-047SR, PE-SR047AL, PE-SR047FL PE44799

URL: http://www.pasternack.com/1.85mm-male-standard-pe-047sr-pe-sr047al-pe-sr047fl-connector-pe44799-p.aspx

The information contained in this document is accurate to the best of our knowledge and representative of the part described herein. It may be necessary to make modifications to the part and/or the documentation of the part, in order to implement improvements. Pasternack reserves the right to make such changes as required. Unless otherwise stated, all specifications are nominal.

Pasternack Enterprises, Inc. • P.O. Box 16759, Irvine, CA 92623
Phone: (866) 727-8376 or (949) 261-1920 • **Fax:** (949) 261-7451
Sales@Pasternack.com • Techsupport@Pasternack.com

© 2013 Pasternack Enterprises All Rights Reserved

PE44799 CAD Drawing

1.85mm Male Precision Connector Clamp/Solder Attachment
For PE-047SR, PE-SR047AL, PE-SR047FL

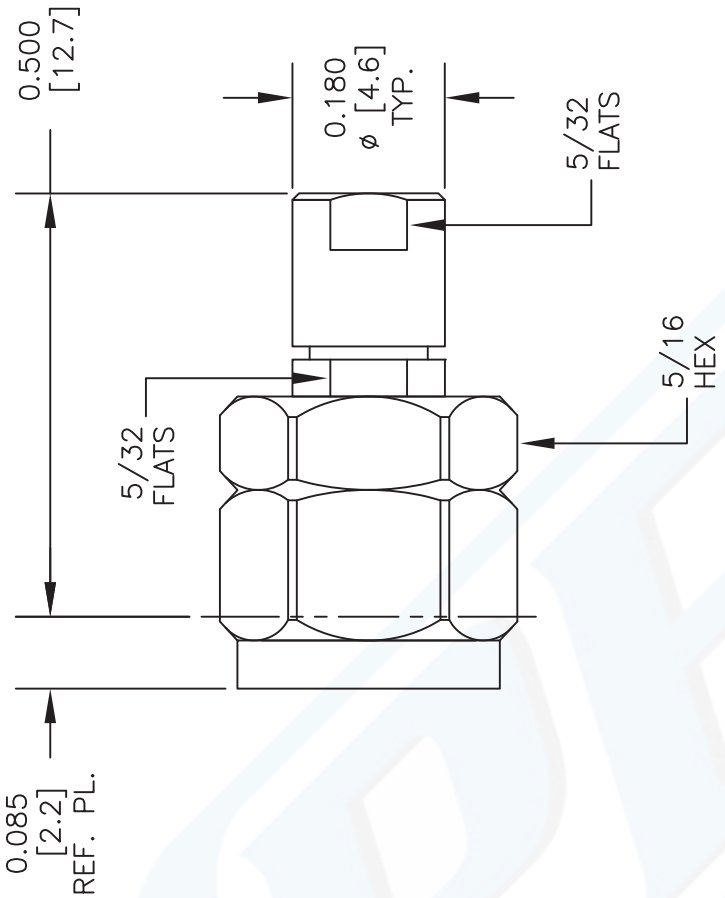

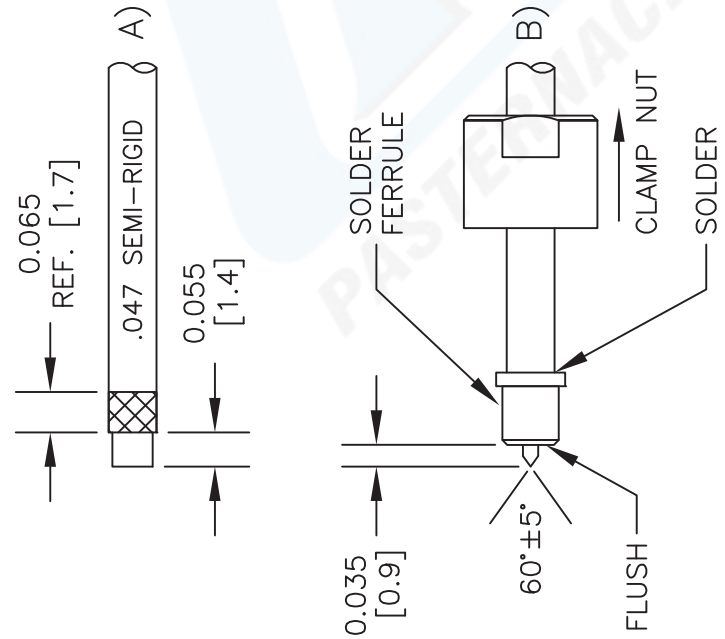

STRIPPING DIMENSIONS

ASSEMBLY PROCEDURES

1. STRIP CABLE AS SHOWN IN (A). DO NOT NICK DIELECTRIC.
2. PRE-TIN CABLE JACKET TO APPROXIMATE DIMENSION AS SHOWN IN (A).
3. INSERT CABLE THRU ADAPTER UNTIL IT BOTTOMS OUT. SOLDER OUTER CONDUCTOR TO ADAPTER & TRIM DIELECTRIC AS SHOWN IN (B).
4. SCREW ASSEMBLY INTO BODY & TIGHTEN NUT.

NOTES:
1. UNLESS OTHERWISE SPECIFIED ALL DIMENSIONS ARE NOMINAL.
2. ALL SPECIFICATIONS ARE SUBJECT TO CHANGE WITHOUT NOTICE AT ANY TIME.
3. DIMENSIONS ARE IN INCHES [mm].
4. FITS MIL-C-17 AND EQUIVALENT CABLES.

DWG TITLE **PE44799**

FSCM NO. 53919

CAD FILE 042413 | SCALE N/A | SIZE A | 2233

PASTERNACK®
Pasternack Enterprises, Inc.
P.O. Box 16759 | Irvine | CA | 92623
Phone: (949) 261-1920 | **Fax:** (949) 261-7451
Website: www.pasternack.com | **E-Mail:** sales@pasternack.com

© 2013 Pasternack Enterprises All Rights Reserved

047 Semi-rigid Coax Cable with Copper Outer Conductor

TECHNICAL DATA SHEET PE-047SR

Configuration

Inner Conductor Material and Plating	Copper Clad Steel, Silver
Dielectric Type	PTFE
Shield Materials	Copper

Electrical Specifications

Impedance, Ohms	50
Maximum Operating Frequency, GHz	40
Dielectric Withstanding Voltage, Vrms	2,000

Electrical Specifications by Frequency

Frequency 1

Frequency, MHz	1000
Attenuation, dB/100ft [dB/100m]	40 [131.23]
Power Handling, Watts	32

Frequency 2

Frequency, GHz	10
Attenuation, dB/100ft [dB/100m]	130 [426.51]
Power Handling, Watts	9

Frequency 3

Frequency, GHz	20
Attenuation, dB/100ft [dB/100m]	190 [623.36]
Power Handling, Watts	6.5

Mechanical Specifications

Temperature

Operating Range, deg C	-55 to +100

Inner Conductor

Number of Strands	1
Material	Copper Clad Steel
Plating	Silver
Diameter, in [mm]	0.011 [0.28]

Dielectric:

Type	PTFE
Diameter, in [mm]	0.037 [0.94]

Shield:

Number of	1
Material 1	Copper
Diameter, in [mm]	0.047 [1.19]

Click the following link (or enter part number in “SEARCH” on website) to obtain additional part information including price, inventory and certifications: 047 Semi-rigid Coax Cable with Copper Outer Conductor PE-047SR

Pasternack Enterprises, Inc. • P.O. Box 16759, Irvine, CA 92623
Phone: (866) 727-8376 or (949) 261-1920 • **Fax:** (949) 261-7451
Sales@Pasternack.com • Techsupport@Pasternack.com

© 2014 Pasternack Enterprises All Rights Reserved

047 Semi-rigid Coax Cable with Copper Outer Conductor

Jacket:

Diameter, in [mm]	0.047 [1.19]
One Time Minimum Bend Radius, in [mm]	0.05 [1.27]
Weight, lbs/ft [Kg/m]	0.005 [0.01]

Compliance Certifications (visit www.Pasternack.com for current document)

RoHS Compliant	
REACH Compliant	12/19/2011

Plotted and Other Data

Notes:

- Values at +25 °C, sea level

047 Semi-rigid Coax Cable with Copper Outer Conductor from Pasternack Enterprises has same day shipment for domestic and International orders. Our RF, microwave and millimeter wave products maintain a 99% availability and are part of the broadest selection in the industry.

Click the following link (or enter part number in "SEARCH" on website) to obtain additional part information including price, inventory and certifications: 047 Semi-rigid Coax Cable with Copper Outer Conductor PE-047SR

URL: http://www.pasternack.com/semirigid-0.047-50-ohm-coax-cable-copper-pe-047sr-p.aspx

The information contained in this document is accurate to the best of our knowledge and representative of the part described herein. It may be necessary to make modifications to the part and/or the documentation of the part, in order to implement improvements. Pasternack reserves the right to make such changes as required. Unless otherwise stated, all specifications are nominal. Pasternack does not make any representation or warranty regarding the suitability of the part described herein for any particular purpose, and Pasternack does not assume any liability arising out of the use of any part or documentation.

Pasternack Enterprises, Inc. • P.O. Box 16759, Irvine, CA 92623
Phone: (866) 727-8376 or (949) 261-1920 • **Fax:** (949) 261-7451
Sales@Pasternack.com • Techsupport@Pasternack.com

© 2014 Pasternack Enterprises All Rights Reserved

PE-047SR CAD Drawing

047 Semi-rigid Coax Cable with Copper Outer Conductor

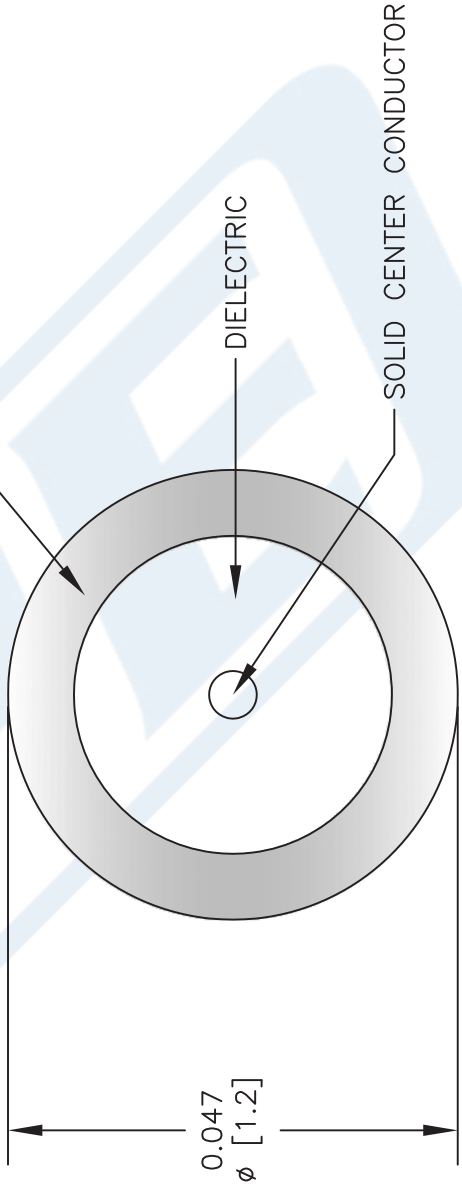

NOTES:
1. UNLESS OTHERWISE SPECIFIED ALL DIMENSIONS ARE NOMINAL.
2. ALL SPECIFICATIONS ARE SUBJECT TO CHANGE WITHOUT NOTICE AT ANY TIME.
3. DIMENSIONS ARE IN INCHES [mm].

DWG TITLE
PE-047SR

FSCM NO. 53919

CAD FILE 073113 | SCALE N/A | SIZE A | 2233

PASTERNACK®
Pasternack Enterprises, Inc.
P.O. Box 16759 | Irvine | CA | 92623
Phone: (949) 261-1920 | **Fax:** (949) 261-7451
Website: www.pasternack.com | **E-Mail:** sales@pasternack.com

© 2014 Pasternack Enterprises All Rights Reserved