PASTERNACK
an INFINITE brand

# 2.2-5 Male Low PIM Connector Solder Attachment for TFT-402, TFT-402-LF

RF Connectors
Technical Data Sheet

TIMES MICROWAVE SYSTEMS

TC-402-225M-LP

## Times Microwave Systems Connector Specification

### Configuration

- 2.2-5 Male Connector
- 50 Ohms
- Straight Body Geometry
- Connector Interface Types: TFT-402, TFT-402-LF
- Low PIM Design

### Features

- Max. Operating Frequency 6 GHz
- Good VSWR of 1.3:1
- PIM levels lower than -160 dBc
- Silver Plated Beryllium Copper Contact
- 200 µin contact plating

### Applications

- General Purpose Test
- Wireless Communications
- Custom Cable Assemblies
- Low PIM Applications
- Distributed Antenna Systems (DAS)

### Description

Pasternack's TC-402-225M-LP 2.2-5 male connector with solder/solder attachment for TFT-402 and TFT-402-LF is part of our full line of RF components available for same-day shipping. Our 2.2-5 male connector operates up to a maximum frequency of 6 GHz and offers good VSWR of 1.3:1. The 2.2-5 male connector also has low passive intermodulation of -160 dBc.

Our 2.2-5 male connector TC-402-225M-LP datasheet specifications and drawing with dimensions are shown below in this PDF. Pasternack's broad catalog of RF, microwave and millimeter wave connectors allows designers to configure and customize their signal connections however they like. Whether the need is to provide an I/O for a board design, or simply create a custom cable assembly configuration, Pasternack has the right connector for the job. Pasternack can also expertly build your custom cable assemblies for you and ship same-day.

### Electrical Specifications

| Description | Minimum | Typical | Maximum | Units |
|---|---|---|---|---|
| Frequency Range | DC | | 6 | GHz |
| VSWR | | | 1.3:1 | |
| Insertion Loss | | | 0.24 | dB |
| Passive Intermodulation | | | -160 | dBc |
| Operating Voltage (DC) | | | 1,500 | Vdc |
| Insulation Resistance | 5,000 | | | MOhms |

Electrical Specification Notes:
Insertion Loss is 0.1*sqrt(FGHz)

Click the following link (or enter part number in "SEARCH" on website) to obtain additional part information including price, inventory and certifications: 2.2-5 Male Low PIM Connector Solder Attachment for TFT-402, TFT-402-LF TC-402-225M-LP

Pasternack Enterprises, Inc. • P.O. Box 16759, Irvine, CA 92623
**Phone:** (866) 727-8376 or (949) 261-1920 • **Fax:** (949) 261-7451
Sales@Pasternack.com • Techsupport@Pasternack.com

© 2020 Pasternack Enterprises All Rights Reserved

PASTERNACK
an INFINITE brand

# 2.2-5 Male Low PIM Connector Solder Attachment for TFT-402, TFT-402-LF

RF Connectors
Technical Data Sheet

TIMES MICROWAVE SYSTEMS

TC-402-225M-LP

## Mechanical Specifications

**Size**

| | |
|---|---|
| Length | 0.854 in [21.69 mm] |
| Width/Dia. | 0.65 in [16.51 mm] |
| Mating Cycles | 100 Cycles |
| Mating Torque | 26 in-lbs [2.94 Nm] |
| Cable Retention Force | 33 lbs [14.97 kg] |

**Material Specifications**

| Description | Material | Plating |
|---|---|---|
| Contact | Beryllium Copper | Silver<br>200 µin |
| Insulation | PTFE | |
| Body | Brass | Silver<br>100 µin |
| Coupling Nut | Brass | Tri-Metal<br>100 µin |

## Environmental Specifications

**Temperature**

| | |
|---|---|
| Operating Range | -40 to +125 deg C |
| Shock | MIL-STD 202G, Meth. 213, Cond. I |
| Vibration | MIL-STD 202G, Meth. 204, Cond. B |
| Thermal Shock | MIL-STD 202G, Meth. 107, Cond. B |

Environmental Specification Notes:
Climatic Class: IEC 60068 55/155/56

## Compliance Certifications (see product page for current document)

## Plotted and Other Data

Notes:

Click the following link (or enter part number in “SEARCH” on website) to obtain additional part information including price, inventory and certifications: 2.2-5 Male Low PIM Connector Solder Attachment for TFT-402, TFT-402-LF TC-402-225M-LP

Pasternack Enterprises, Inc. • P.O. Box 16759, Irvine, CA 92623
**Phone:** (866) 727-8376 or (949) 261-1920 • **Fax:** (949) 261-7451
Sales@Pasternack.com • Techsupport@Pasternack.com

© 2020 Pasternack Enterprises All Rights Reserved

# 2.2-5 Male Low PIM Connector Solder Attachment for TFT-402, TFT-402-LF

## RF Connectors
## Technical Data Sheet

TIMES MICROWAVE SYSTEMS

TC-402-225M-LP

2.2-5 Male Low PIM Connector Solder Attachment for TFT-402, TFT-402-LF from Pasternack Enterprises has same day shipment for domestic and International orders. Our RF, microwave and millimeter wave products maintain a 99.4% availability and are part of the broadest selection in the industry.

Click the following link (or enter part number in “SEARCH” on website) to obtain additional part information including price, inventory and certifications: 2.2-5 Male Low PIM Connector Solder Attachment for TFT-402, TFT-402-LF TC-402-225M-LP

URL: https://www.pasternack.com/2.2-5-male-tft-402-connector-tc-402-225m-lp-p.aspx

The information contained in this document is accurate to the best of our knowledge and representative of the part described herein. It may be necessary to make modifications to the part and/or the documentation of the part, in order to implement improvements. Pasternack reserves the right to make such changes as required. Unless otherwise stated, all specifications are nominal. Pasternack does not make any representation or warranty regarding the suitability of the part described herein for any particular purpose, and Pasternack does not assume any liability arising out of the use of any part or documentation.

Pasternack Enterprises, Inc. • P.O. Box 16759, Irvine, CA 92623
**Phone:** (866) 727-8376 or (949) 261-1920 • **Fax:** (949) 261-7451
Sales@Pasternack.com • Techsupport@Pasternack.com

© 2020 Pasternack Enterprises All Rights Reserved

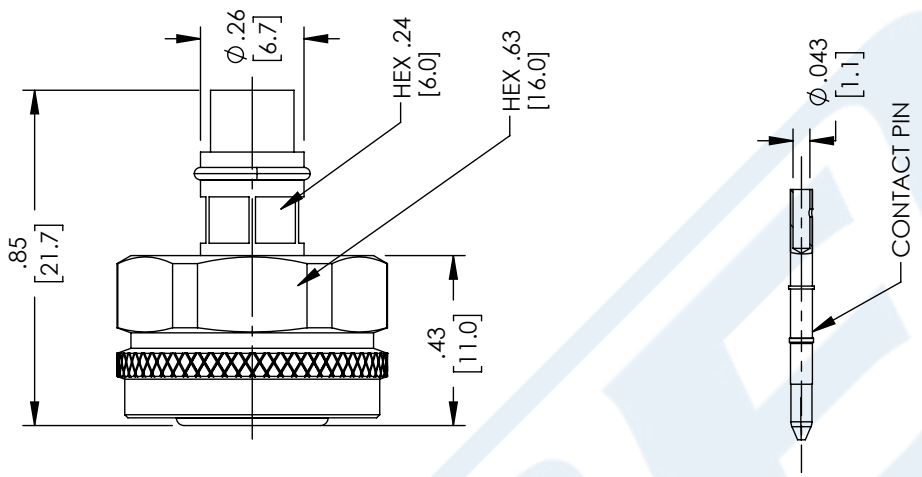


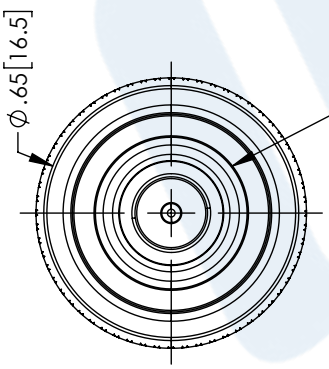


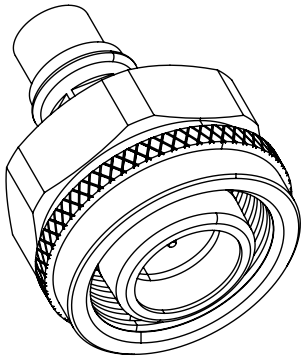

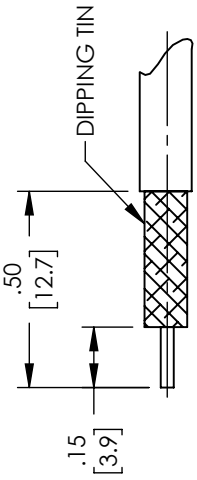


RECOMMENDED CABLE STRIPPING DIM'S
Connector Adds: 15.7mm[0.618"]

UNLESS OTHERWISE SPECIFIED
LEADING DIMENSIONS ARE INCHES
DIMENSIONS IN [ ] ARE MILLIMETERS

TOLERANCES:

| | |
|---|---|
| .X = ± .2 [5.08] | FRACTIONS ± 1/32 |
| .XX = ± .02 [.51] | ANGLES ± 1° |
| .XXX = ± .005 [.13] | |

CABLE LENGTH (L) TOLERANCES:
L ≤ 12 [305] = +1 [25] / -0
12 [305] < L ≤ 60 [1524] = +2 [51] / -0
60 [1524] < L ≤ 120 [3048] = +4 [102] / -0
120 [3048] < L ≤ 300 [7620] = +6 [152] / -0
300 [7620] < L = +5%L / -0

ALL DIMENSIONS SHOWN ARE FOR REFERENCE ONLY.

PASTERNACK an INFINITE brand

Pasternack Enterprises, Inc.
P.O.Box 16759, Irvine, CA 92623.
Phone: 1.949.261.1920 | 1.866.727.8376
Fax: 1.949.261.7451
Website: www.pasternack.com
E-mail: sales@pasternack.com

THIRD-ANGLE PROJECTION

THE INFORMATION AND DESIGN IN THIS DOCUMENT IS THE PROPERTY OF PASTERNACK CORPORATION ALL RIGHTS RESERVED.

| SIZE | CAGE CODE | DRAWN BY | ITEM NO. | REV |
|---|---|---|---|---|
| A | 53919 | DMAY | TC-402-225M-LP | A |

SHEET 1 OF 1
SCALE 2:1

THESE COMMODITIES, TECHNOLOGY OR SOFTWARE WERE EXPORTED FROM THE UNITED STATES IN ACCORDANCE WITH THE EXPORT ADMINISTRATION REGULATIONS. DIVERSION CONTRARY TO U.S. LAW PROHIBITED.

T-Rev.D

PASTERNACK
an INFINITE brand

# N Female Bulkhead Mount Low PIM Connector Solder Attachment for TFT-402, TFT-402-LF

RF Connectors
Technical Data Sheet

TIMES MICROWAVE SYSTEMS

TC-402-NF-BH-LP

## Times Microwave Systems Connector Specification

### Configuration

- N Female Connector
- 50 Ohms
- Straight Body Geometry
- Connector Interface Types: TFT-402, TFT-402-LF
- Bulkhead
- Low PIM Design

### Features

- Max. Operating Frequency 6 GHz
- Excellent VSWR of 1.25:1
- PIM levels lower than -160 dBc
- Silver Plated Brass Contact
- 5 µm contact plating
- IP 67 Rated

### Applications

- General Purpose Test
- Rack and Panel Mount Applications
- Wireless Communications
- Custom Cable Assemblies
- Low PIM Applications
- Distributed Antenna Systems (DAS)

### Description

Pasternack's TC-402-NF-BH-LP type N female bulkhead connector with solder/solder attachment for TFT-402 and TFT-402-LF is part of our full line of RF components available for same-day shipping. Our type N female connector operates up to a maximum frequency of 6 GHz and offers excellent VSWR of 1.25:1. The type N female connector also has low passive intermodulation of -160 dBc. This type N bulkhead connector allows designers to create external connections on their product enclosures, and can be used in a variety of other rack mount and panel mount applications. The connector has an IP67 rating to protect against dust and temporary moisture protection under immersion conditions.

Our type N female bulkhead connector TC-402-NF-BH-LP datasheet specifications and drawing with dimensions are shown below in this PDF. Pasternack's broad catalog of RF, microwave and millimeter wave connectors allows designers to configure and customize their signal connections however they like. Whether the need is to provide an I/O for a board design, or simply create a custom cable assembly configuration, Pasternack has the right connector for the job. Pasternack can also expertly build your custom cable assemblies for you and ship same-day.

### Electrical Specifications

| Description | Minimum | Typical | Maximum | Units |
|---|---|---|---|---|
| Frequency Range | DC | | 6 | GHz |
| VSWR | | | 1.25:1 | |
| Insertion Loss | | | 0.1 | dB |
| Passive Intermodulation | | | -160 | dBc |
| Operating Voltage (DC) | | | 1,000 | Vdc |
| Inner Conductor DC Resistance | | | 1 | mOhms |
| Outer Conductor DC Resistance | | | 1 | mOhms |
| Insulation Resistance | 5,000 | | | MOhms |

Click the following link (or enter part number in "SEARCH" on website) to obtain additional part information including price, inventory and certifications: N Female Bulkhead Mount Low PIM Connector Solder Attachment for TFT-402, TFT-402-LF TC-402-NF-BH-LP

Pasternack Enterprises, Inc. • P.O. Box 16759, Irvine, CA 92623
**Phone:** (866) 727-8376 or (949) 261-1920 • **Fax:** (949) 261-7451
Sales@Pasternack.com • Techsupport@Pasternack.com

© 2020 Pasternack Enterprises All Rights Reserved

# N Female Bulkhead Mount Low PIM Connector Solder Attachment for TFT-402, TFT-402-LF



Electrical Specification Notes:
Insertion Loss is 0.1*sqrt(FGHz)

## Mechanical Specifications

**Size**

| | |
|---|---|
| Length | 1.358 in [34.49 mm] |
| Width/Dia. | 0.748 in [19.00 mm] |
| Mating Torque | 10 in-lbs [1.13 Nm] |

**Material Specifications**

| Description | Material | Plating |
|---|---|---|
| Contact | Brass | Silver 5 µm |
| Insulation | PTFE | |
| Outer Conductor | Brass | Tri-Metal 3 µm |
| Body | Brass | Tri-Metal 3 µm |
| Gasket | Silicone Rubber | |

## Environmental Specifications

**Temperature**

| | |
|---|---|
| Operating Range | -55 to +155 deg C |
| Ingress Protection (IP) Rating | IP 67 Rated |
| Shock | US MIL-STD 202, Meth. 213, Cond. I |
| Vibration | US MIL-STD 202, Meth. 204, Cond. B |
| Thermal Shock | US MIL-STD 202, Meth. 107, Cond. B |

Environmental Specification Notes:
Weather Standard: TEC 60068 55/155/21

## Compliance Certifications (see product page for current document)

## Plotted and Other Data

Notes:

Click the following link (or enter part number in “SEARCH” on website) to obtain additional part information including price, inventory and certifications: N Female Bulkhead Mount Low PIM Connector Solder Attachment for TFT-402, TFT-402-LF TC-402-NF-BH-LP

Pasternack Enterprises, Inc. • P.O. Box 16759, Irvine, CA 92623
**Phone:** (866) 727-8376 or (949) 261-1920 • **Fax:** (949) 261-7451
Sales@Pasternack.com • Techsupport@Pasternack.com

© 2020 Pasternack Enterprises All Rights Reserved

# N Female Bulkhead Mount Low PIM Connector Solder Attachment for TFT-402, TFT-402-LF

RF Connectors
Technical Data Sheet

TC-402-NF-BH-LP

N Female Bulkhead Mount Low PIM Connector Solder Attachment for TFT-402, TFT-402-LF from Pasternack Enterprises has same day shipment for domestic and International orders. Our RF, microwave and millimeter wave products maintain a 99.4% availability and are part of the broadest selection in the industry.

Click the following link (or enter part number in “SEARCH” on website) to obtain additional part information including price, inventory and certifications: N Female Bulkhead Mount Low PIM Connector Solder Attachment for TFT-402, TFT-402-LF TC-402-NF-BH-LP

URL: https://www.pasternack.com/n-female-tft-402-connector-tc-402-nf-bh-lp-p.aspx

The information contained in this document is accurate to the best of our knowledge and representative of the part described herein. It may be necessary to make modifications to the part and/or the documentation of the part, in order to implement improvements. Pasternack reserves the right to make such changes as required. Unless otherwise stated, all specifications are nominal. Pasternack does not make any representation or warranty regarding the suitability of the part described herein for any particular purpose, and Pasternack does not assume any liability arising out of the use of any part or documentation.

Pasternack Enterprises, Inc. • P.O. Box 16759, Irvine, CA 92623
**Phone:** (866) 727-8376 or (949) 261-1920 • **Fax:** (949) 261-7451
Sales@Pasternack.com • Techsupport@Pasternack.com

© 2020 Pasternack Enterprises All Rights Reserved

# TIMES MICROWAVE SYSTEMS TC-402-NF-BH-LP CAD Drawing

N Female Bulkhead Mount Low PIM Connector Solder Attachment for TFT-402, TFT-402-LF

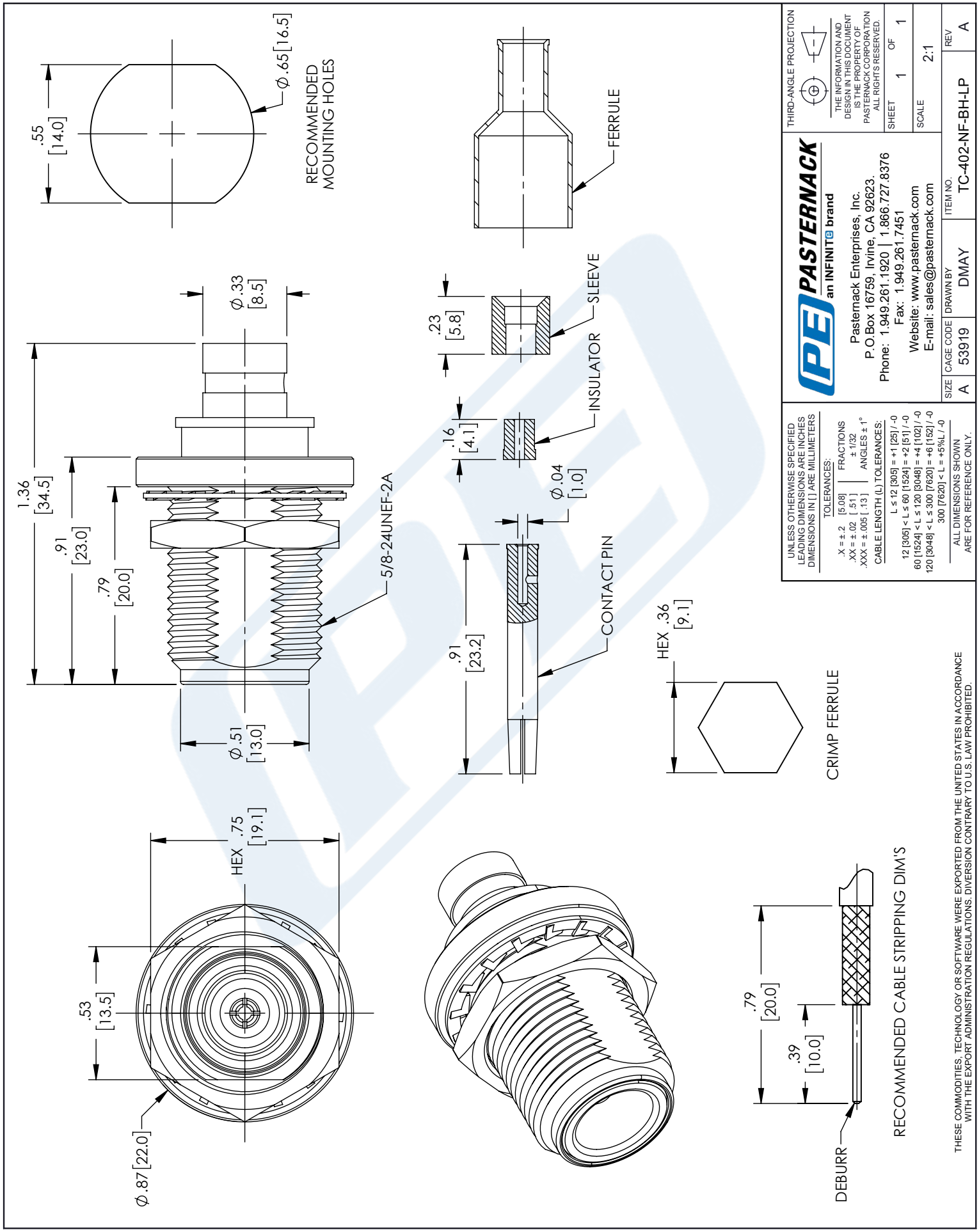


© 2020 Pasternack Enterprises All Rights Reserved

PASTERNACK
an INFINITE brand

# Low PIM Flexible TFT-5G-402 Coax Cable Double Shielded with Blue FEP Jacket

## RF Cables
## Technical Data Sheet

**TFT-5G-402**

## Times Microwave Systems Coax Cable Specification

### Configuration

- Low PIM Flexible Cable
- 2 Shield(s)

### Features

- PIM < -160 dBc
- UL910 Plenum Rated Cable
- Lightweight and Extremely Flexible
- Low Loss
- Good Shielding >80 dB
- UV Resistant Jacket

### Applications

- Base Stations
- Antenna Pigtails
- Distributed Antenna Systems (DAS)
- Plenum Installations
- Small Cells
- Multi-Carrier Communication Systems

### Description

TFT-5G-402 low pim flexible coax cable by Times Microwave is part of our full line of RF components available for same-day shipping. The TFT-5G-402 plenum rated coaxial cable features a taped PTFE dielectric, solid copper center conductor and a dual-braid outer conductor. These features combine to make the Times Microwave TFT-5G-402 an extremely flexible, low loss and low PIM coax cable that is well suited for Distributed Antenna Systems (DAS), plenum installations or small cells. The tough, FEP jacket provides moisture, UV protection and resistance to corrosive environments.

Our datasheet specifications and drawing with dimensions for Times Microwave TFT-5G-402 coax cable are shown below in this PDF. Whether the need is to provide a low PIM jumper connection, low PIM antenna pigtails or simply create a custom cable assembly configuration, Pasternack has the right TFT-5G-402 cable assemblies for the job.

### Electrical Specifications

| Description | Minimum | Typical | Maximum | Units |
|---|---|---|---|---|
| Frequency Range | DC | | 5.8 | GHz |
| Impedance | | 50 | | Ohms |
| Velocity of Propagation | | 76 | | % |
| Shielding Effectiveness | 80 | | | dB |
| Passive Intermodulation | | | -160 | dBc |
| Nominal Capacitance | | 26.7 [87.6] | | pF/ft [pF/m] |

Click the following link (or enter part number in “SEARCH” on website) to obtain additional part information including price, inventory and certifications: Low PIM Flexible TFT-5G-402 Coax Cable Double Shielded with Blue FEP Jacket TFT-5G-402

Pasternack Enterprises, Inc. • P.O. Box 16759, Irvine, CA 92623
**Phone:** (866) 727-8376 or (949) 261-1920 • **Fax:** (949) 261-7451
Sales@Pasternack.com • Techsupport@Pasternack.com

© 2020 Pasternack Enterprises All Rights Reserved

# Low PIM Flexible TFT-5G-402 Coax Cable Double Shielded with Blue FEP Jacket

## RF Cables
## Technical Data Sheet

**TFT-5G-402**

### Performance by Frequency Band

| Description | F1 | F2 | F3 | F4 | F5 | Units |
|---|---|---|---|---|---|---|
| Frequency | 0.45 | 1.9 | 2.3 | 4.9 | 5.8 | GHz |
| Attenuation, Typ | 7.9 | 16.4 | 18.2 | 27 | 29.5 | dB/100ft |
| | 25.92 | 53.81 | 59.71 | 88.58 | 96.78 | dB/100m |
| Input Power (CW), Max | 430 | 200 | 180 | 120 | 110 | Watts |

### Mechanical Specifications

| | |
|---|---|
| Diameter | 0.16 in [4.06 mm} |
| Weight | 0.028 lbs/ft [0.04 kg/m] |
| Min. Bend Radius (Installation) | 0.75 in [19.05 mm] |

### Construction Specifications

| Description | Material and Plating | Diameter |
|---|---|---|
| Inner Conductor | Copper, 1 Strand | 0.037 in [0.94 mm] |
| Conductor Type | Solid | |
| Dielectric | PTFE | 0.113 in [2.87 mm] |
| First Shield | Tin | 0.121 in [3.07 mm] |
| Outer Conductor | Copper, Tin | 0 in [0 mm] |
| Jacket | FEP, Blue | 0.16 in [4.06 mm] |

### Environmental Specifications

**Temperature**

| | |
|---|---|
| Operating Range | -55 to +150 deg C |

Click the following link (or enter part number in “SEARCH” on website) to obtain additional part information including price, inventory and certifications: Low PIM Flexible TFT-5G-402 Coax Cable Double Shielded with Blue FEP Jacket TFT-5G-402

Pasternack Enterprises, Inc. • P.O. Box 16759, Irvine, CA 92623
**Phone:** (866) 727-8376 or (949) 261-1920 • **Fax:** (949) 261-7451
Sales@Pasternack.com • Techsupport@Pasternack.com

© 2020 Pasternack Enterprises All Rights Reserved

# Low PIM Flexible TFT-5G-402 Coax Cable Double Shielded with Blue FEP Jacket



**Compliance Certifications** (see product page for current document)

**Plotted and Other Data**

Notes:

Low PIM Flexible TFT-5G-402 Coax Cable Double Shielded with Blue FEP Jacket from Pasternack Enterprises has same day shipment for domestic and International orders. Our RF, microwave and millimeter wave products maintain a 99.4% availability and are part of the broadest selection in the industry.

Click the following link (or enter part number in “SEARCH” on website) to obtain additional part information including price, inventory and certifications: Low PIM Flexible TFT-5G-402 Coax Cable Double Shielded with Blue FEP Jacket TFT-5G-402

URL: https://www.pasternack.com/low-pim-flexible-tft-5g-402-fep-jacket-tin-outer-conductor-double-shielded-tft-5g-402-p.aspx

The information contained in this document is accurate to the best of our knowledge and representative of the part described herein. It may be necessary to make modifications to the part and/or the documentation of the part, in order to implement improvements. Pasternack reserves the right to make such changes as required. Unless otherwise stated, all specifications are nominal. Pasternack does not make any representation or warranty regarding the suitability of the part described herein for any particular purpose, and Pasternack does not assume any liability arising out of the use of any part or documentation.

Pasternack Enterprises, Inc. • P.O. Box 16759, Irvine, CA 92623
**Phone:** (866) 727-8376 or (949) 261-1920 • **Fax:** (949) 261-7451
Sales@Pasternack.com • Techsupport@Pasternack.com

© 2020 Pasternack Enterprises All Rights Reserved

# TFT-5G-402 CAD Drawing

Low PIM Flexible TFT-5G-402 Coax Cable Double Shielded with Blue FEP Jacket

REVISIONS

| REV. | DESCRIPTION | DATE | APPROVED |
|---|---|---|---|
| A | INITIAL RELEASE | 09/13/2022 | A. GANWANI |

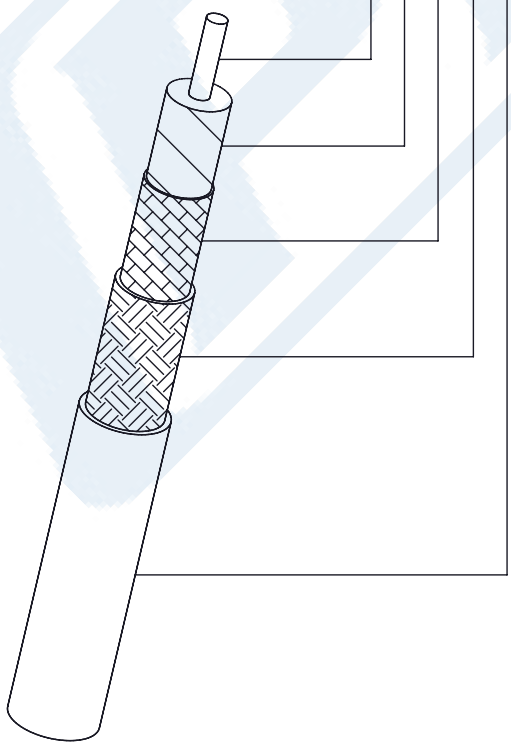

| | | |
|---|---|---|
| Center Conductor | .037 [0.94] | Bare Copper |
| Dielectric | .113 [2.87] | Taped PTFE |
| Shield | .121 [3.07] | Tin Plated Flat Braid |
| Outer Braid | .138 [3.51] | Tin Plated Copper Braid |
| Jacket | .160 [4.06] | Blue FEP |

UNLESS OTHERWISE SPECIFIED
LEADING DIMENSIONS ARE INCHES
DIMENSIONS IN [ ] ARE MILLIMETERS

TOLERANCES:

.X = ± .2 [5.08] | FRACTIONS ± 1/32
.XX = ± .02 [ .51 ] | ANGLES ± 1°
.XXX = ± .005 [ .13 ]

CABLE LENGTH (L) TOLERANCES:

L ≤ 12 [305] = +1 [25] / -0
12 [305] < L ≤ 60 [1524] = +2 [51] / -0
60 [1524] < L ≤ 120 [3048] = +4 [102] / -0
120 [3048] < L ≤ 300 [7620] = +6 [152] / -0
300 [7620] < L = +5%L / -0

ALL DIMENSIONS SHOWN ARE FOR REFERENCE ONLY.

PASTERNACK® an INFINITE brand

Pasternack Enterprises, Inc.
P.O.Box 16759, Irvine, CA 92623.
Phone: 1.949.261.1920 | 1.866.727.8376
Fax: 1.949.261.7451
Website: www.pasternack.com
E-mail: sales@pasternack.com

THIRD-ANGLE PROJECTION

THE INFORMATION AND DESIGN IN THIS DOCUMENT IS THE PROPERTY OF PASTERNACK CORPORATION ALL RIGHTS RESERVED.

SHEET 1 OF 1

SCALE N/A

| SIZE | CAGE CODE | DRAWN BY | ITEM NO. | REV |
|---|---|---|---|---|
| A | 53919 | K.DANG | TFT-5G-402 | A |

THESE COMMODITIES, TECHNOLOGY OR SOFTWARE WERE EXPORTED FROM THE UNITED STATES IN ACCORDANCE WITH THE EXPORT ADMINISTRATION REGULATIONS. DIVERSION CONTRARY TO U.S. LAW PROHIBITED.

T-Rev.D