10-32 Male Connector Crimp/Solder Attachment for RG178, RG196

RF Connectors Technical Data Sheet PE44352

Configuration

- 10-32 Male Connector
- MIL-C-39012
- 50 Ohms
- Straight Body Geometry
- RG178, RG196 Interface Type
- Crimp/Solder Attachment

Features

- Gold Plated Contact
- Contact plating according to MIL-G-45204

Applications

- General Purpose Test
- Custom Cable Assemblies

Description

Pasternack's PE44352 10-32 male connector with crimp/solder attachment for RG178 and RG196 is part of our full line of RF components available for same-day shipping.

Our 10-32 male connector PE44352 datasheet specifications and drawing with dimensions are shown below in this PDF. Pasternack's broad catalog of RF, microwave and millimeter wave connectors allows designers to configure and customize their signal connections however they like. Whether the need is to provide an I/O for a board design, or simply create a custom cable assembly configuration, Pasternack has the right connector for the job. Pasternack can also expertly build your custom cable assemblies for you and ship same-day.

Mechanical Specifications

Size

Length	1.08 in [27.43 mm]
Width/Dia.	0.25 in [6.35 mm]
Weight	0.01 lbs [4.54 g]

Material Specifications

Description	Material	Plating
Contact		Gold MIL-G-45204
Insulation	PTFE	
Body	Brass	Nickel QQ-N-290
Coupling Nut	Brass	Nickel QQ-N-290

Click the following link (or enter part number in "SEARCH" on website) to obtain additional part information including price, inventory and certifications: 10-32 Male Connector Crimp/Solder Attachment for RG178, RG196 PE44352

Pasternack Enterprises, Inc. • P.O. Box 16759, Irvine, CA 92623
Phone: (866) 727-8376 or (949) 261-1920 • **Fax:** (949) 261-7451
Sales@Pasternack.com • Techsupport@Pasternack.com

© 2016 Pasternack Enterprises All Rights Reserved

10-32 Male Connector Crimp/Solder Attachment for RG178, RG196

Compliance Certifications (see product page for current document)

Plotted and Other Data

Notes:

10-32 Male Connector Crimp/Solder Attachment for RG178, RG196 from Pasternack Enterprises has same day shipment for domestic and International orders. Our RF, microwave and millimeter wave products maintain a 99% availability and are part of the broadest selection in the industry.

Click the following link (or enter part number in "SEARCH" on website) to obtain additional part information including price, inventory and certifications: 10-32 Male Connector Crimp/Solder Attachment for RG178, RG196 PE44352

URL: https://www.pasternack.com/10-32-male-standard-rg178-rg196-connector-pe44352-p.aspx

The information contained in this document is accurate to the best of our knowledge and representative of the part described herein. It may be necessary to make modifications to the part and/or the documentation of the part, in order to implement improvements. Pasternack reserves the right to make such changes as required. Unless otherwise stated, all specifications are nominal. Pasternack does not make any representation or warranty regarding the suitability of the part described herein for any particular purpose, and Pasternack does not assume any liability arising out of the use of any part or documentation.

Pasternack Enterprises, Inc. • P.O. Box 16759, Irvine, CA 92623
Phone: (866) 727-8376 or (949) 261-1920 • **Fax:** (949) 261-7451
Sales@Pasternack.com • Techsupport@Pasternack.com

© 2016 Pasternack Enterprises All Rights Reserved

PE44352 CAD Drawing

10-32 Male Connector Crimp/Solder Attachment for RG178, RG196

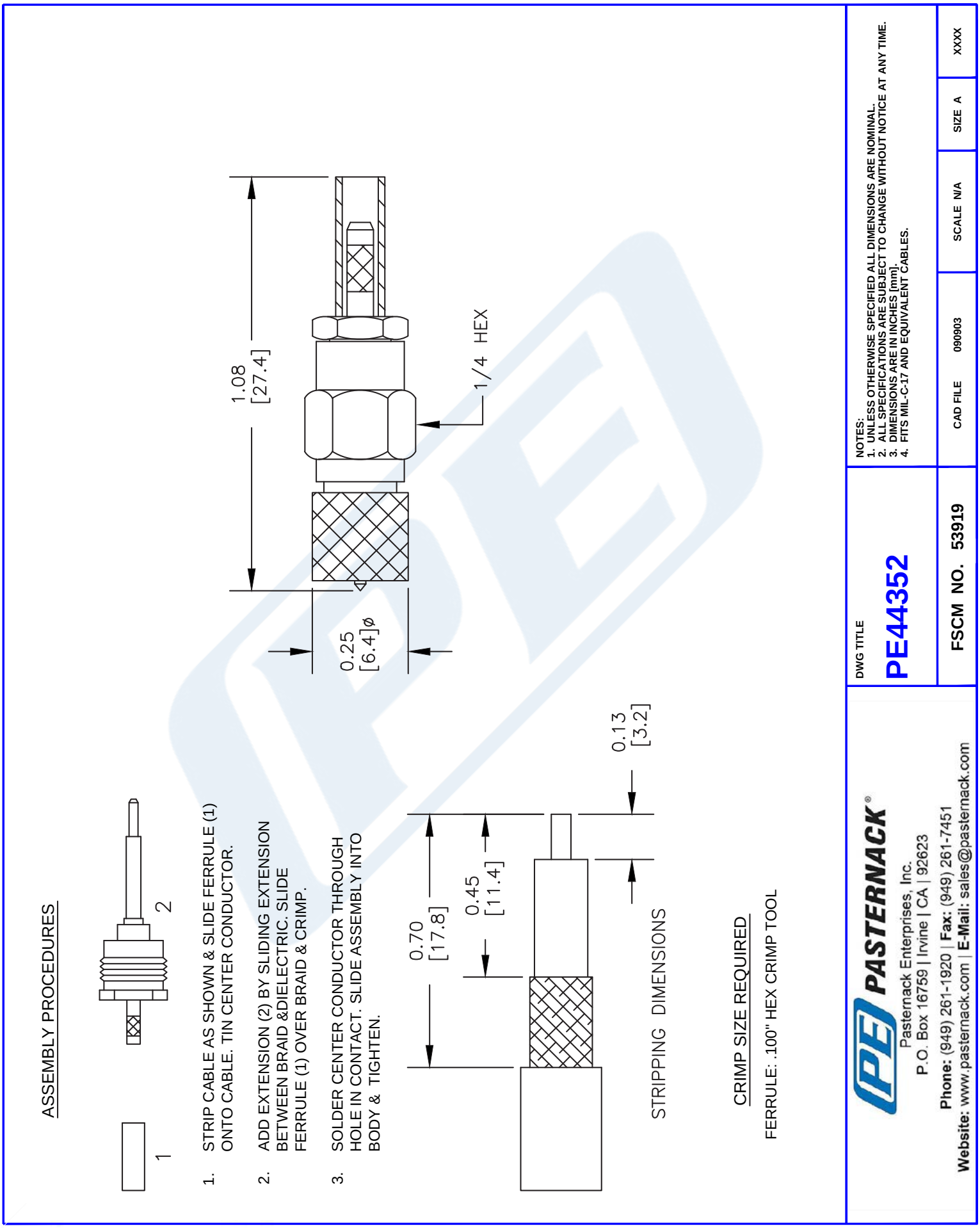

© 2016 Pasternack Enterprises All Rights Reserved

MMCX Jack Connector Crimp/Solder Attachment for RG178, RG196

Configuration

- MMCX Jack Connector
- BS EN 122340
- 50 Ohms
- Straight Body Geometry
- RG178, RG196 Interface Type
- Crimp/Solder Attachment

Features

- Max. Operating Frequency 3 GHz
- Excellent VSWR of 1.22:1
- Gold Plated Beryllium Copper Contact
- 30 µin minimum contact plating

Applications

- General Purpose Test
- Custom Cable Assemblies

Description

Pasternack's PE4902 MMCX jack connector with crimp/solder attachment for RG178 and RG196 is part of our full line of RF components available for same-day shipping. Our MMCX jack connector operates up to a maximum frequency of 3 GHz and offers excellent VSWR of 1.22:1.

Our MMCX jack connector PE4902 datasheet specifications and drawing with dimensions are shown below in this PDF. Pasternack's broad catalog of RF, microwave and millimeter wave connectors allows designers to configure and customize their signal connections however they like. Whether the need is to provide an I/O for a board design, or simply create a custom cable assembly configuration, Pasternack has the right connector for the job. Pasternack can also expertly build your custom cable assemblies for you and ship same-day.

Electrical Specifications

Description	Minimum	Typical	Maximum	Units
Frequency Range	DC		3	GHz
VSWR			1.22:1	
Operating Voltage (AC)			170	Vrms

Mechanical Specifications

Size

Length	0.46 in [11.68 mm]
Width/Dia.	0.135 in [3.43 mm]
Weight	0.002 lbs [0.91 g]

Click the following link (or enter part number in "SEARCH" on website) to obtain additional part information including price, inventory and certifications: MMCX Jack Connector Crimp/Solder Attachment for RG178, RG196 PE4902

Pasternack Enterprises, Inc. • P.O. Box 16759, Irvine, CA 92623
Phone: (866) 727-8376 or (949) 261-1920 • **Fax:** (949) 261-7451
Sales@Pasternack.com • Techsupport@Pasternack.com

© 2016 Pasternack Enterprises All Rights Reserved

MMCX Jack Connector Crimp/Solder Attachment for RG178, RG196

Material Specifications

Description	Material	Plating
Contact	Beryllium Copper	Gold 30 µin minimum
Insulation	PTFE	
Body	Brass	Gold 3 µin minimum

Environmental Specifications

Temperature

Operating Range -55 to +155 deg C

Compliance Certifications (see product page for current document)

Plotted and Other Data

Notes:

MMCX Jack Connector Crimp/Solder Attachment for RG178, RG196 from Pasternack Enterprises has same day shipment for domestic and International orders. Our RF, microwave and millimeter wave products maintain a 99% availability and are part of the broadest selection in the industry.

Click the following link (or enter part number in "SEARCH" on website) to obtain additional part information including price, inventory and certifications: MMCX Jack Connector Crimp/Solder Attachment for RG178, RG196 PE4902

URL: https://www.pasternack.com/mmcx-jack-standard-rg178-rg196-connector-pe4902-p.aspx

The information contained in this document is accurate to the best of our knowledge and representative of the part described herein. It may be necessary to make modifications to the part and/or the documentation of the part, in order to implement improvements. Pasternack reserves the right to make such changes as required. Unless otherwise stated, all specifications are nominal. Pasternack does not make any representation or warranty regarding the suitability of the part described herein for any particular purpose, and Pasternack does not assume any liability arising out of the use of any part or documentation.

Pasternack Enterprises, Inc. • P.O. Box 16759, Irvine, CA 92623
Phone: (866) 727-8376 or (949) 261-1920 • **Fax:** (949) 261-7451
Sales@Pasternack.com • Techsupport@Pasternack.com

© 2016 Pasternack Enterprises All Rights Reserved

PE4902 CAD Drawing

MMCX Jack Connector Crimp/Solder Attachment for RG178, RG196

ASSEMBLY PROCEDURES

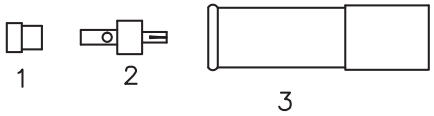

1. STRIP CABLE AS SHOWN. DO NOT NICK BRAID WHILE CUTTING JACKET.
2. SLIDE INSERT (1) OVER BRAID AND AGAINST THE JACKET, FORM BRAID OVER INSERT (1). TRIM BRAID BACK TO SHOULDER. CUT DIELECTRIC AND CENTER CONDUCTOR TO DIMENSION SHOWN. TIN CENTER CONDUCTOR.
3. SOLDER CONTACT (2), TO CENTER CONDUCTOR REMOVE EXCESS SOLDER. SLIDE BODY OVER CONTACT AND INSERT (1). THEN CRIMP BODY (3).

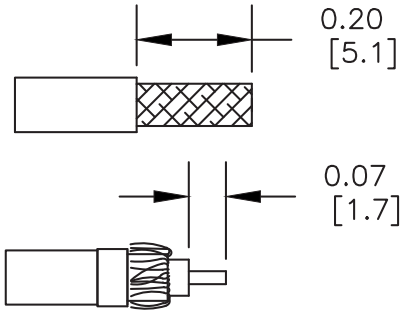

STRIPPING DIMENSIONS

CRIMP SIZE REQUIRED

FERRULE: .100" HEX CRIMP TOOL

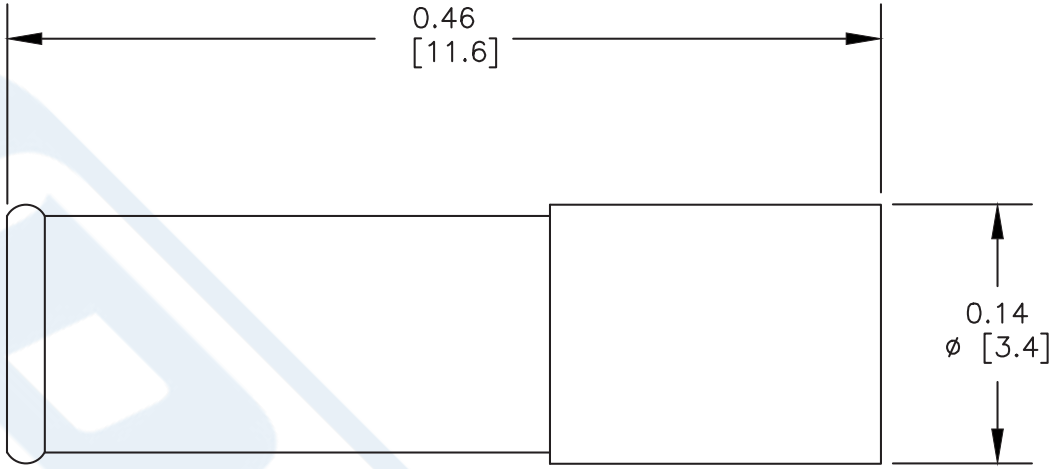

PASTERNACK®
Pasternack Enterprises, Inc.
P.O. Box 16759 | Irvine | CA | 92623
Phone: (949) 261-1920 | **Fax:** (949) 261-7451
Website: www.pasternack.com | **E-Mail:** sales@pasternack.com

DWG TITLE

PE4902

NOTES:
1. UNLESS OTHERWISE SPECIFIED ALL DIMENSIONS ARE NOMINAL.
2. ALL SPECIFICATIONS ARE SUBJECT TO CHANGE WITHOUT NOTICE AT ANY TIME.
3. DIMENSIONS ARE IN INCHES [mm].
4. FITS MIL-C-17 AND EQUIVALENT CABLES.

REV. A	FSCM NO. 53919	CAD FILE 021513-A	SCALE N/A	SIZE A	127

© 2016 Pasternack Enterprises All Rights Reserved

Flexible RG178 Coax Cable Single Shielded with Tan FEP Jacket

Configuration

- Flexible Cable
- 1 Shield(s)

Electrical Specifications

Description	Minimum	Typical	Maximum	Units
Frequency Range	DC		3	GHz
Impedance		50		Ohms
Velocity of Propagation		70		%
Operating Voltage (AC)			1,000	Vrms
Nominal Capacitance		29.4 [96.46]		pF/ft [pF/m]

Performance by Frequency Band

Description	F1	F2	F3	F4	F5	Units
Frequency	0.1	0.4	1	3		GHz
Attenuation, Typ	13.81	27.8	44.41	78.4		dB/100ft
	45.31	91.21	145.7	257.22		dB/100m

Mechanical Specifications

Diameter	0.072 in [1.83 mm]
Weight	0.005 lbs/ft [0.01 Kg/m]
Min. Bend Radius (Repeated)	0.4 in [10.16 mm]

Construction Specifications

Description	Material and Plating	Diameter
Inner Conductor	Copper Clad Steel, Silver, 7 Strands	0.012 in [0.3 mm]
Conductor Type	Stranded	
Dielectric	PTFE	0.034 in [0.86 mm]
First Shield	Silver Plated Copper Braid	0.051 in [1.3 mm]

Click the following link (or enter part number in “SEARCH” on website) to obtain additional part information including price, inventory and certifications: Flexible RG178 Coax Cable Single Shielded with Tan FEP Jacket RG178B/U

Pasternack Enterprises, Inc. • P.O. Box 16759, Irvine, CA 92623
Phone: (866) 727-8376 or (949) 261-1920 • **Fax:** (949) 261-7451
Sales@Pasternack.com • Techsupport@Pasternack.com

© 2017 Pasternack Enterprises All Rights Reserved

Flexible RG178 Coax Cable Single Shielded with Tan FEP Jacket

Jacket	FEP, Tan	0.072 in [1.83 mm]

Environmental Specifications

Temperature

Operating Range	-55 to +200 deg C

Compliance Certifications (see product page for current document)

Plotted and Other Data

Notes:

Flexible RG178 Coax Cable Single Shielded with Tan FEP Jacket from Pasternack Enterprises has same day shipment for domestic and International orders. Our RF, microwave and millimeter wave products maintain a 99.4% availability and are part of the broadest selection in the industry.

Click the following link (or enter part number in "SEARCH" on website) to obtain additional part information including price, inventory and certifications: Flexible RG178 Coax Cable Single Shielded with Tan FEP Jacket RG178B/U

URL: https://www.pasternack.com/flexible-0.075-rg178-50-ohm-coax-cable-fep-jacket-rg178b-u-p.aspx

The information contained in this document is accurate to the best of our knowledge and representative of the part described herein. It may be necessary to make modifications to the part and/or the documentation of the part, in order to implement improvements. Pasternack reserves the right to make such changes as required. Unless otherwise stated, all specifications are nominal. Pasternack does not make any representation or warranty regarding the suitability of the part described herein for any particular purpose, and Pasternack does not assume any liability arising out of the use of any part or documentation.

Pasternack Enterprises, Inc. • P.O. Box 16759, Irvine, CA 92623
Phone: (866) 727-8376 or (949) 261-1920 • **Fax:** (949) 261-7451
Sales@Pasternack.com • Techsupport@Pasternack.com

© 2017 Pasternack Enterprises All Rights Reserved

RG178B/U CAD Drawing

Flexible RG178 Coax Cable Single Shielded with Tan FEP Jacket

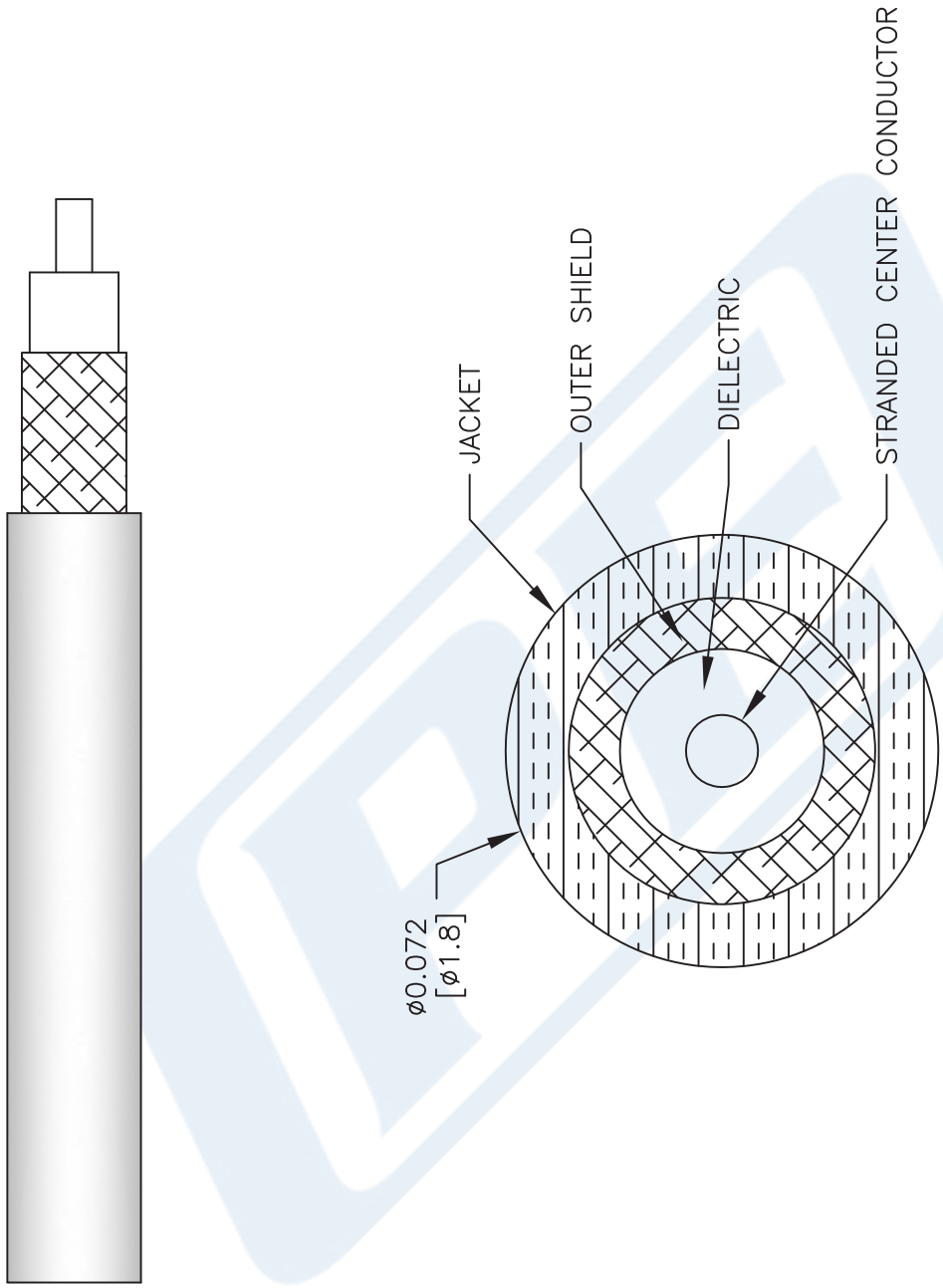

NOTES:
1. UNLESS OTHERWISE SPECIFIED ALL DIMENSIONS ARE NOMINAL.
2. ALL SPECIFICATIONS ARE SUBJECT TO CHANGE WITHOUT NOTICE AT ANY TIME.
3. DIMENSIONS ARE IN INCHES [mm].

DWG TITLE
RG178B/U

CAD FILE 062117 | SCALE N/A | SIZE A | 2233

CAGE CODE 53919

PASTERNACK®
THE ENGINEER'S RF SOURCE
Pasternack Enterprises, Inc.
P.O. Box 16759 | Irvine | CA | 92623
Phone: (949) 261-1920 | **Fax:** (949) 261-7451
Website: www.pasternack.com | **E-Mail:** sales@pasternack.com

© 2017 Pasternack Enterprises All Rights Reserved