C Male Connector Crimp/Solder Attachment for RG58, RG303, RG141, PE-C195, PE-P195, LMR-195, 0.195 inch

Configuration

- C Male Connector
- MIL-STD-348A
- 50 Ohms
- Straight Body Geometry
- RG58, RG303, RG141, PE-C195, PE-P195, LMR-195, 0.195 inch Interface Type
- Crimp/Solder Attachment

Features

- Max. Operating Frequency 3 GHz
- Good VSWR of 1.3:1
- Silver Plated Brass Contact
- 200 µin minimum contact plating

Applications

- General Purpose Test
- Custom Cable Assemblies

Description

Pasternack's PE4517 type C male connector with crimp/solder attachment for RG58, RG303, RG141, PE-C195, PE-P195, LMR-195 and 0.195 inch is part of our full line of RF components available for same-day shipping. Our type C male connector operates up to a maximum frequency of 3 GHz and offers good VSWR of 1.3:1.

Our type C male connector PE4517 datasheet specifications and drawing with dimensions are shown below in this PDF. Pasternack's broad catalog of RF, microwave and millimeter wave connectors allows designers to configure and customize their signal connections however they like. Whether the need is to provide an I/O for a board design, or simply create a custom cable assembly configuration, Pasternack has the right connector for the job. Pasternack can also expertly build your custom cable assemblies for you and ship same-day.

Electrical Specifications

Description	Minimum	Typical	Maximum	Units
Frequency Range	DC		3	GHz
VSWR			1.3:1	
Operating Voltage (AC)			1,000	Vrms

Mechanical Specifications

Size

Length	1.4 in [35.56 mm]
Width/Dia.	0.75 in [19.05 mm]
Weight	0.062 lbs [28.12 g]

Click the following link (or enter part number in "SEARCH" on website) to obtain additional part information including price, inventory and certifications: C Male Connector Crimp/Solder Attachment for RG58, RG303, RG141, PE-C195, PE-P195, LMR-195, 0.195 inch PE4517

Pasternack Enterprises, Inc. • P.O. Box 16759, Irvine, CA 92623
Phone: (866) 727-8376 or (949) 261-1920 • **Fax:** (949) 261-7451
Sales@Pasternack.com • Techsupport@Pasternack.com

© 2016 Pasternack Enterprises All Rights Reserved

C Male Connector Crimp/Solder Attachment for RG58, RG303, RG141, PE-C195, PE-P195, LMR-195, 0.195 inch

Material Specifications

Description	Material	Plating
Contact	Brass	Silver 200 µin minimum
Insulation	PTFE	
Body	Brass	Nickel 100 µin minimum
Coupling Nut	Brass	Nickel 100 µin minimum

Environmental Specifications

Temperature

Operating Range -65 to +165 deg C

Compliance Certifications (see product page for current document)

Plotted and Other Data

Notes:

C Male Connector Crimp/Solder Attachment for RG58, RG303, RG141, PE-C195, PE-P195, LMR-195, 0.195 inch from Pasternack Enterprises has same day shipment for domestic and International orders. Our RF, microwave and millimeter wave products maintain a 99% availability and are part of the broadest selection in the industry.

Click the following link (or enter part number in "SEARCH" on website) to obtain additional part information including price, inventory and certifications: C Male Connector Crimp/Solder Attachment for RG58, RG303, RG141, PE-C195, PE-P195, LMR-195, 0.195 inch PE4517

URL: https://www.pasternack.com/c-male-standard-rg58-connector-pe4517-p.aspx

The information contained in this document is accurate to the best of our knowledge and representative of the part described herein. It may be necessary to make modifications to the part and/or the documentation of the part, in order to implement improvements. Pasternack reserves the right to make such changes as required. Unless otherwise stated, all specifications are nominal. Pasternack does not make any representation or warranty regarding the suitability of the part described herein for any particular purpose, and Pasternack does not assume any liability arising out of the use of any part or documentation.

Pasternack Enterprises, Inc. • P.O. Box 16759, Irvine, CA 92623
Phone: (866) 727-8376 or (949) 261-1920 • **Fax:** (949) 261-7451
Sales@Pasternack.com • Techsupport@Pasternack.com

© 2016 Pasternack Enterprises All Rights Reserved

PE4517 CAD Drawing

C Male Connector Crimp/Solder Attachment for RG58, RG303, RG141, PE-C195, PE-P195, LMR-195, 0.195 inch

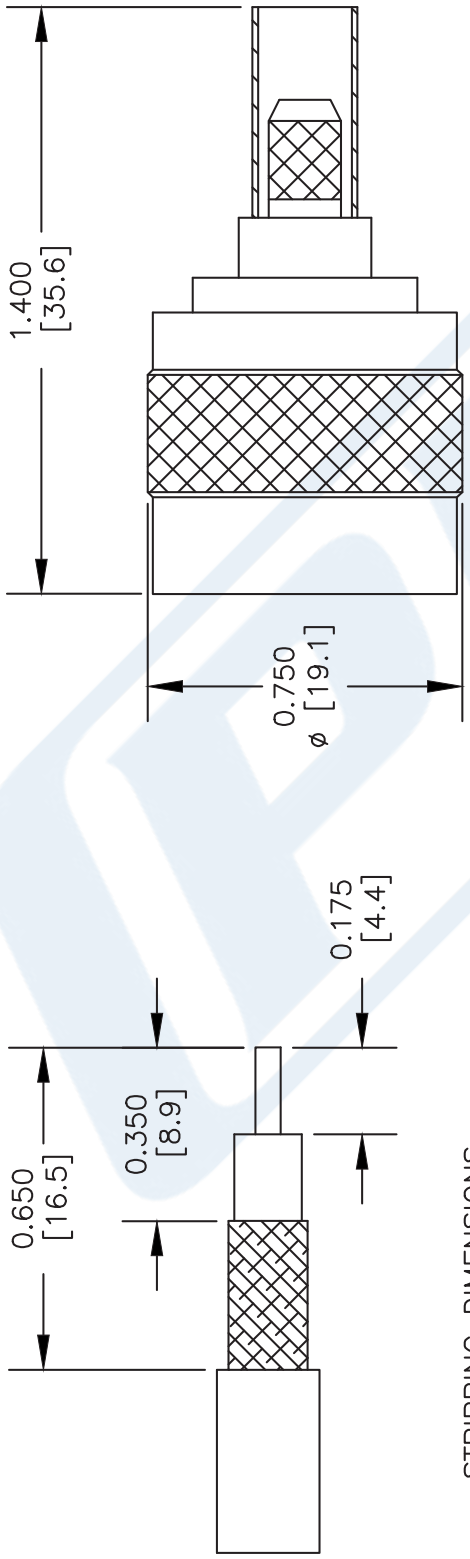

STRIPPING DIMENSIONS

CRIMP SIZE REQUIRED

CONTACT: .100" HEX CRIMP TOOL
FERRULE: .213" HEX CRIMP TOOL

NOTES:
1. UNLESS OTHERWISE SPECIFIED ALL DIMENSIONS ARE NOMINAL.
2. ALL SPECIFICATIONS ARE SUBJECT TO CHANGE WITHOUT NOTICE AT ANY TIME.
3. DIMENSIONS ARE IN INCHES [mm].
4. FITS MIL-C-17 AND EQUIVALENT CABLES.

DWG TITLE
PE4517

FSCM NO. 53919

CAD FILE 052102 | SCALE N/A | SIZE A | 127

PASTERNACK®
Pasternack Enterprises, Inc.
P.O. Box 16759 | Irvine | CA | 92623
Phone: (949) 261-1920 | **Fax:** (949) 261-7451
Website: www.pasternack.com | **E-Mail:** sales@pasternack.com

© 2016 Pasternack Enterprises All Rights Reserved

PASTERNACK
an INFINITE brand

SHV jack crimp for RG142,RG400

RF Connectors
Technical Data Sheet

PE45854

Configuration

- SHV Jack Connector
- MIL-STD-348B
- 50 Ohms
- Straight Body Geometry
- Connector Interface Types: RG142, RG400

Features

- Max. Operating Frequency 300 MHz
- Gold over Nickel over copper Plated Brass Contact

Applications

- General Purpose Test
- Custom Cable Assemblies

Description

Pasternack's PE45854 SHV jack connector with crimp/solder attachment for RG142 and RG400 is part of our full line of RF components available for same-day shipping. Our SHV jack connector operates up to a maximum frequency of 300 MHz.

Our SHV jack connector PE45854 datasheet specifications and drawing with dimensions are shown below in this PDF. Pasternack's broad catalog of RF, microwave and millimeter wave connectors allows designers to configure and customize their signal connections however they like. Whether the need is to provide an I/O for a board design, or simply create a custom cable assembly configuration, Pasternack has the right connector for the job. Pasternack can also expertly build your custom cable assemblies for you and ship same-day.

Electrical Specifications

Description	Minimum	Typical	Maximum	Units
Frequency Range	DC		300	MHz
Operating Voltage (AC)			3,500	Vrms
Dielectric Withstanding Voltage (AC)			5,000	Vrms
Inner Conductor DC Resistance			2	mOhms
Outer Conductor DC Resistance			1.5	mOhms

Mechanical Specifications

Size

Length	1.82 in [46.23 mm]
Width/Dia.	0.43 in [10.92 mm]
Height	0.43 in [10.92 mm]
Weight	0.048 lbs [21.77 g]

Click the following link (or enter part number in "SEARCH" on website) to obtain additional part information including price, inventory and certifications: SHV jack crimp for RG142,RG400 PE45854

Pasternack Enterprises, Inc. • P.O. Box 16759, Irvine, CA 92623
Phone: (866) 727-8376 or (949) 261-1920 • **Fax:** (949) 261-7451
Sales@Pasternack.com • Techsupport@Pasternack.com

© 2020 Pasternack Enterprises All Rights Reserved

SHV jack crimp for RG142,RG400

RF Connectors
Technical Data Sheet

PE45854

Material Specifications

Description	Material	Plating
Contact	Brass	Gold over Nickel over copper
Insulation	Teflon	
Body	Brass	Tinned Copper
Crimp Sleeve	Brass	Tinned Copper

Environmental Specifications

Temperature

Operating Range	-65 to +165 deg C
Thermal Shock	MIL-STD-202, Method 107, Condition B

Compliance Certifications (see product page for current document)

Plotted and Other Data

Notes:

SHV jack crimp for RG142,RG400 from Pasternack Enterprises has same day shipment for domestic and International orders. Our RF, microwave and millimeter wave products maintain a 99.4% availability and are part of the broadest selection in the industry.

Click the following link (or enter part number in “SEARCH” on website) to obtain additional part information including price, inventory and certifications: SHV jack crimp for RG142,RG400 PE45854

URL: https://www.pasternack.com/shv-jack-rg142-rg400-connector-pe45854-p.aspx

The information contained in this document is accurate to the best of our knowledge and representative of the part described herein. It may be necessary to make modifications to the part and/or the documentation of the part, in order to implement improvements. Pasternack reserves the right to make such changes as required. Unless otherwise stated, all specifications are nominal. Pasternack does not make any representation or warranty regarding the suitability of the part described herein for any particular purpose, and Pasternack does not assume any liability arising out of the use of any part or documentation.

Pasternack Enterprises, Inc. • P.O. Box 16759, Irvine, CA 92623
Phone: (866) 727-8376 or (949) 261-1920 • **Fax:** (949) 261-7451
Sales@Pasternack.com • Techsupport@Pasternack.com

© 2020 Pasternack Enterprises All Rights Reserved

PE45854 CAD Drawing

SHV jack crimp for RG142,RG400

REVISIONS			
REV.	DESCRIPTION	DATE	APPROVED
A	INITIAL RELEASE	09/13/2022	AGANWANI

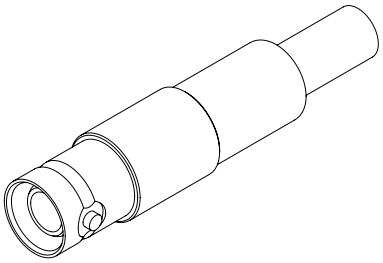

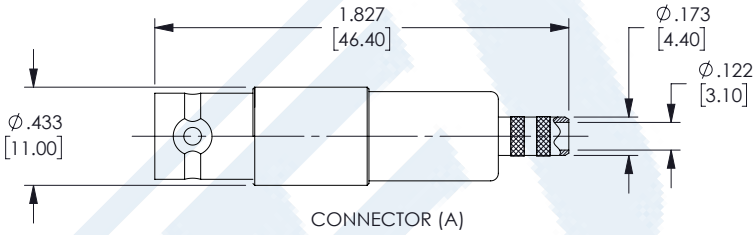

CONNECTOR (A)

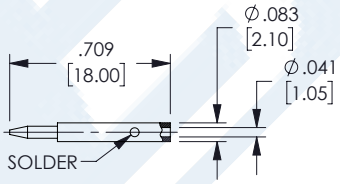

CONTACT (B)

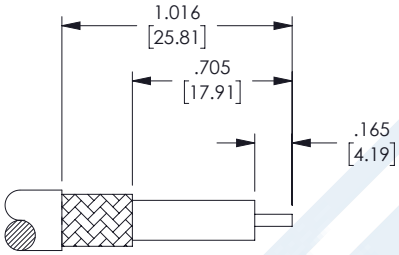

STRIPPING DIMENSIONS

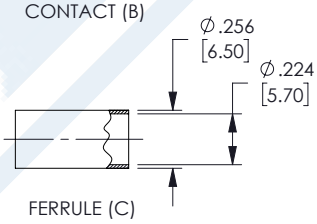

FERRULE (C)

CRIMP SIZE REQUIRED
CONTACT: SOLDER
FERRULE: .217 [5.5] HEX CRIMP TOOL

ASSEMBLY INSTRUCTIONS:

1. STRIP THE CABLE AS SHOWN. DO NOT NICK CENTER CONDUCTOR.
2. SLIDE THE FERRULE (C) OVER THE CABLE JACKET.
3. PLACE THE CONTACT (B) ONTO THE CENTER CONDUCTOR. SOLDER CONTACT TO CENTER CONDUCTOR.
4. LOOSEN THE CABLE BRAID, THEN SLIDE THE CONNECTOR (A) INTO PLACE. THE CABLE BRAID MUST OVERLAP THE KNURLED SECTION AT THE REAR END OF THE CONNECTOR (A).
5. SLIDE THE FERRULE (C) OVER THE CABLE BRAID AND CRIMP IN PLACE.

THESE COMMODITIES, TECHNOLOGY OR SOFTWARE WERE EXPORTED FROM THE UNITED STATES IN ACCORDANCE WITH THE EXPORT ADMINISTRATION REGULATIONS. DIVERSION CONTRARY TO U.S. LAW PROHIBITED.

UNLESS OTHERWISE SPECIFIED
LEADING DIMENSIONS ARE INCHES
DIMENSIONS IN [ ] ARE MILLIMETERS

TOLERANCES:
.X = ± .2 [5.08]
.XX = ± .02 [.51]
.XXX = ± .005 [.13]
FRACTIONS ± 1/32
ANGLES ± 1°

CABLE LENGTH (L) TOLERANCES:
L ≤ 12 [305] = +1 [25] / -0
12 [305] < L ≤ 60 [1524] = +2 [51] / -0
60 [1524] < L ≤ 120 [3048] = +4 [102] / -0
120 [3048] < L ≤ 300 [7620] = +6 [152] / -0
300 [7620] < L = +5%L / -0

ALL DIMENSIONS SHOWN ARE FOR REFERENCE ONLY.

PASTERNACK an INFINITE brand
Pasternack Enterprises, Inc.
P.O.Box 16759, Irvine, CA 92623.
Phone: 1.949.261.1920 | 1.866.727.8376
Fax: 1.949.261.7451
Website: www.pasternack.com
E-mail: sales@pasternack.com

THIRD-ANGLE PROJECTION

THE INFORMATION AND DESIGN IN THIS DOCUMENT IS THE PROPERTY OF PASTERNACK CORPORATION ALL RIGHTS RESERVED.

SHEET 1 OF 1
SCALE N/A

SIZE	CAGE CODE	DRAWN BY	ITEM NO.	REV
A	53919	AKRESOWSK	PE45854	A

T-Rev.D

Flexible RG58 Coax Cable Single Shielded with Black PVC (NC) Jacket

Configuration

- Flexible Cable
- 1 Shield(s)

Electrical Specifications

Description	Minimum	Typical	Maximum	Units
Frequency Range	DC		5	GHz
Impedance		50		Ohms
Velocity of Propagation		65.9		%
Operating Voltage (AC)			1,900	Vrms
Nominal Capacitance		30.8 [101.05]		pF/ft [pF/m]

Performance by Frequency Band

Description	F1	F2	F3	F4	F5	Units
Frequency	0.01	0.1	1	5		GHz
Attenuation, Typ	1.4	4.9	20	60		dB/100ft
	4.59	16.08	65.62	196.85		dB/100m
Input Power (CW), Max			44			Watts

Mechanical Specifications

Diameter	0.195 in [4.95 mm]
Weight	0.025 lbs/ft [0.04 Kg/m]
Min. Bend Radius (Installation)	0.98 in [24.89 mm]
Min. Bend Radius (Repeated)	1.96 in [49.78 mm]

Construction Specifications

Description	Material and Plating	Diameter
Inner Conductor	Copper, Tin, 19 Strands	0.036 in [0.91 mm]
Conductor Type	Stranded	
Dielectric	PE	0.116 in [2.95 mm]

Click the following link (or enter part number in “SEARCH” on website) to obtain additional part information including price, inventory and certifications: Flexible RG58 Coax Cable Single Shielded with Black PVC (NC) Jacket RG58C/U

Pasternack Enterprises, Inc. • P.O. Box 16759, Irvine, CA 92623
Phone: (866) 727-8376 or (949) 261-1920 • **Fax:** (949) 261-7451
Sales@Pasternack.com • Techsupport@Pasternack.com

© 2017 Pasternack Enterprises All Rights Reserved

Flexible RG58 Coax Cable Single Shielded with Black PVC (NC) Jacket

First Shield	Tinned Copper Braid	0.138 in [3.51 mm]
Jacket	PVC (NC), Black	0.195 in [4.95 mm]

Environmental Specifications

Temperature

Operating Range	-40 to +80 deg C

Compliance Certifications (see product page for current document)

Plotted and Other Data

Notes:

Flexible RG58 Coax Cable Single Shielded with Black PVC (NC) Jacket from Pasternack Enterprises has same day shipment for domestic and International orders. Our RF, microwave and millimeter wave products maintain a 99.4% availability and are part of the broadest selection in the industry.

Click the following link (or enter part number in "SEARCH" on website) to obtain additional part information including price, inventory and certifications: Flexible RG58 Coax Cable Single Shielded with Black PVC (NC) Jacket RG58C/U

URL: https://www.pasternack.com/flexible-0.195-rg58-50-ohm-coax-cable-pvc-jacket-rg58c-u-p.aspx

The information contained in this document is accurate to the best of our knowledge and representative of the part described herein. It may be necessary to make modifications to the part and/or the documentation of the part, in order to implement improvements. Pasternack reserves the right to make such changes as required. Unless otherwise stated, all specifications are nominal. Pasternack does not make any representation or warranty regarding the suitability of the part described herein for any particular purpose, and Pasternack does not assume any liability arising out of the use of any part or documentation.

Pasternack Enterprises, Inc. • P.O. Box 16759, Irvine, CA 92623
Phone: (866) 727-8376 or (949) 261-1920 • **Fax:** (949) 261-7451
Sales@Pasternack.com • Techsupport@Pasternack.com

© 2017 Pasternack Enterprises All Rights Reserved

RG58C/U CAD Drawing

Flexible RG58 Coax Cable Single Shielded with Black PVC (NC) Jacket

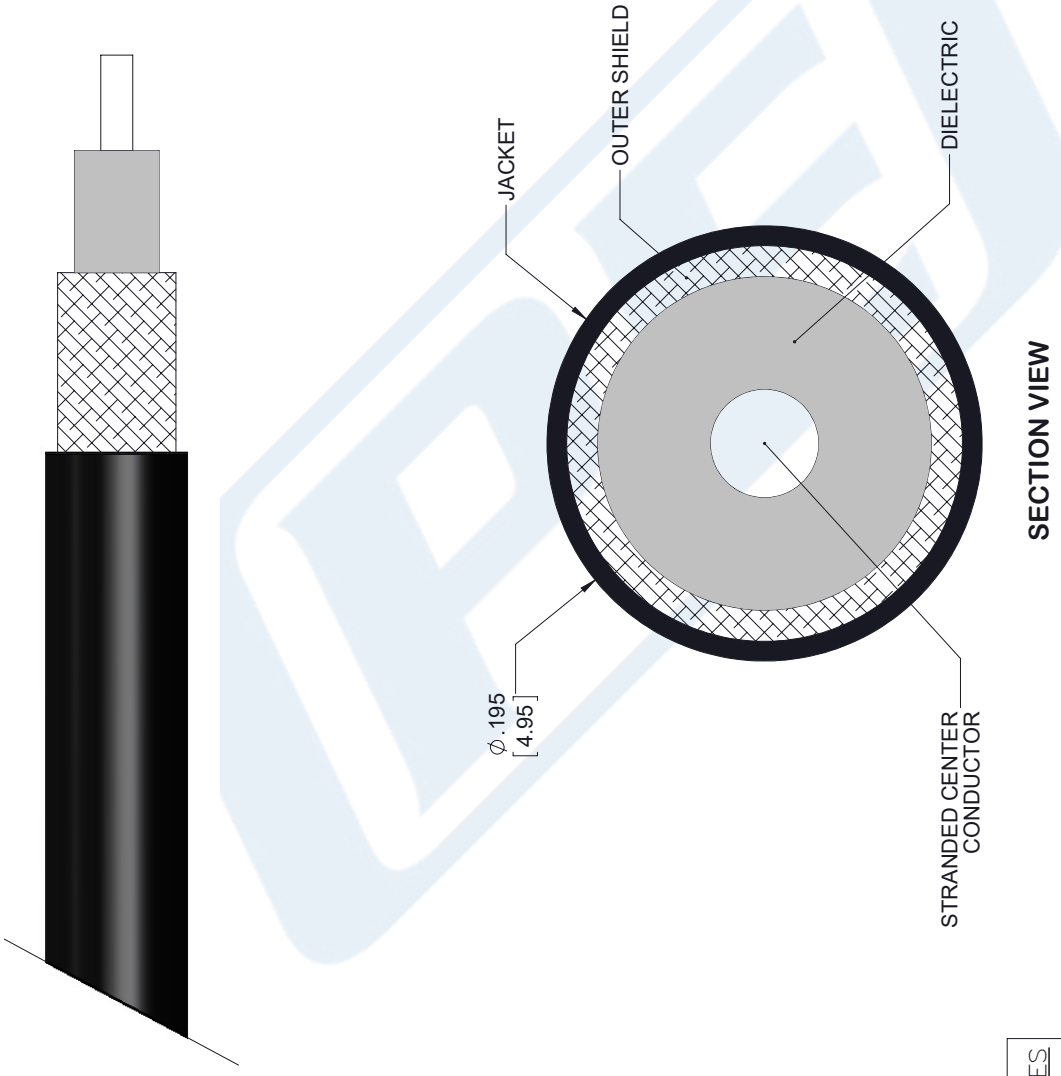

STANDARD TOLERANCES	
.X	±0.2
.XX	±0.01
.XXX	±0.005

*STANDARD TOLERANCES APPLY ONLY TO DIMENSIONS IN INCHES

NOTES:
1. UNLESS OTHERWISE SPECIFIED ALL DIMENSIONS ARE NOMINAL.
2. ALL SPECIFICATIONS ARE SUBJECT TO CHANGE WITHOUT NOTICE AT ANY TIME
3. DIMENSIONS ARE IN INCHES [mm].

DWG TITLE RG58C/U

CAD FILE 091817 | SCALE N/A | SIZE A | 7361

CAGE CODE 53919

PASTERNACK®
THE ENGINEER'S RF SOURCE
Pasternack Enterprises, Inc.
P.O. Box 16759 | Irvine | CA | 92623
Phone: (949) 261-1920 | **Fax:** (949) 261-7451
Website: www.pasternack.com | **E-Mail:** sales@pasternack.com

© 2017 Pasternack Enterprises All Rights Reserved