PASTERNACK
an INFINITE brand

QN Male Right Angle Low PIM Connector Solder Attachment for PE-SR402AL, PE-SR402FL, PE-SR402FLJ, PE-SR402TN, RG402, IP68

RF Connectors
Technical Data Sheet

PE44604

Configuration

- QN Male Connector
- 50 Ohms
- Right Angle Body Geometry
- Connector Interface Types: PE-SR402AL, PE-SR402FL, PE-SR402FLJ, PE-SR402TN, RG402
- Low PIM Design

Features

- Max. Operating Frequency 8 GHz
- PIM levels lower than -160 dBc
- Gold Plated Brass Contact
- IP68 0.3 bar (interface only)

Applications

- General Purpose Test
- Wireless Communications
- Custom Cable Assemblies
- Low PIM Applications

Description

Pasternack's PE44604 QN male right angle connector with solder/solder attachment for PE-SR402AL, PE-SR402FL, PE-SR402FLJ, PE-SR402TN and RG402 is part of our full line of RF components available for same-day shipping. Our QN male connector operates up to a maximum frequency of 8 GHz. The QN male connector also has low passive intermodulation of -160 dBc. Its right angle body geometry allows for easier connections in tight spaces. The connector has an IP68 rating to protect against dust and prolonged moisture protection under immersion conditions.

Our QN male right angle connector PE44604 datasheet specifications and drawing with dimensions are shown below in this PDF. Pasternack's broad catalog of RF, microwave and millimeter wave connectors allows designers to configure and customize their signal connections however they like. Whether the need is to provide an I/O for a board design, or simply create a custom cable assembly configuration, Pasternack has the right connector for the job. Pasternack can also expertly build your custom cable assemblies for you and ship same-day.

Electrical Specifications

Description	Minimum	Typical	Maximum	Units
Frequency Range	DC		8	GHz
Passive Intermodulation using 2x20W tones			-160	dBc
Operating Voltage (AC)			1,000	Vrms
Test Voltage (AC)			2,500	Vrms
Inner Conductor DC Resistance			1.5	mOhms
Outer Conductor DC Resistance			1.5	mOhms
Insulation Resistance	5,000			MOhms

Click the following link (or enter part number in "SEARCH" on website) to obtain additional part information including price, inventory and certifications: QN Male Right Angle Low PIM Connector Solder Attachment for PE-SR402AL, PE-SR402FL, PE-SR402FLJ, PE-SR402TN, RG402, IP68 PE44604

Pasternack Enterprises, Inc. • P.O. Box 16759, Irvine, CA 92623
Phone: (866) 727-8376 or (949) 261-1920 • **Fax:** (949) 261-7451
Sales@Pasternack.com • Techsupport@Pasternack.com

© 2020 Pasternack Enterprises All Rights Reserved

QN Male Right Angle Low PIM Connector Solder Attachment for PE-SR402AL, PE-SR402FL, PE-SR402FLJ, PE-SR402TN, RG402, IP68

Performance by Frequency

Description	F1	F2	F3	F4	F5	Units
Frequency Range	DC to 2.5	2.5 to 4	4 to 6			GHz
VSWR, Max	1.06:1	1.09:1	1.12:1			

Electrical Specification Notes:
RF leakage: 90 dB (up to 3 GHz) min.
Insertion loss = 0.05 x sqrt(fGHz) dB max.

Mechanical Specifications

Size

Length	1.039 in [26.39 mm]
Width/Dia.	0.75 in [19.05 mm]
Weight	0.052 lbs [23.59 g]
Mating Cycles	100 Cycles

Material Specifications

Description	Material	Plating
Contact	Brass	Gold
Insulation	PTFE	
Outer Conductor	Brass	Tri-Metal
Body	Brass	Silver 3 µm minimum

Environmental Specifications

Temperature

Operating Range	-40 to +125 deg C
Ingress Protection (IP) Rating	IP68 0.3 bar (interface only)
Humidity	MIL-STD-202, Method 106
Shock	MIL-STD-202, Method 213, Condition I
Vibration	MIL-STD-202, Method 204, Condition A
Thermal Shock	MIL-STD-202, Method 107, Condition B
Salt Spray	MIL-STD-202, Method 101, Condition B

Click the following link (or enter part number in “SEARCH” on website) to obtain additional part information including price, inventory and certifications: QN Male Right Angle Low PIM Connector Solder Attachment for PE-SR402AL, PE-SR402FL, PE-SR402FLJ, PE-SR402TN, RG402, IP68 PE44604

Pasternack Enterprises, Inc. • P.O. Box 16759, Irvine, CA 92623
Phone: (866) 727-8376 or (949) 261-1920 • **Fax:** (949) 261-7451
Sales@Pasternack.com • Techsupport@Pasternack.com

© 2020 Pasternack Enterprises All Rights Reserved

QN Male Right Angle Low PIM Connector Solder Attachment for PE-SR402AL, PE-SR402FL, PE-SR402FLJ, PE-SR402TN, RG402, IP68

Compliance Certifications (see product page for current document)

Plotted and Other Data

Notes:

QN Male Right Angle Low PIM Connector Solder Attachment for PE-SR402AL, PE-SR402FL, PE-SR402FLJ, PE-SR402TN, RG402, IP68 from Pasternack Enterprises has same day shipment for domestic and International orders. Our RF, microwave and millimeter wave products maintain a 99.4% availability and are part of the broadest selection in the industry.

Click the following link (or enter part number in “SEARCH” on website) to obtain additional part information including price, inventory and certifications: QN Male Right Angle Low PIM Connector Solder Attachment for PE-SR402AL, PE-SR402FL, PE-SR402FLJ, PE-SR402TN, RG402, IP68 PE44604

URL: https://www.pasternack.com/qn-male-standard-pe-sr402al-pe-sr402fl-rg402-connector-pe44604-p.aspx

The information contained in this document is accurate to the best of our knowledge and representative of the part described herein. It may be necessary to make modifications to the part and/or the documentation of the part, in order to implement improvements. Pasternack reserves the right to make such changes as required. Unless otherwise stated, all specifications are nominal. Pasternack does not make any representation or warranty regarding the suitability of the part described herein for any particular purpose, and Pasternack does not assume any liability arising out of the use of any part or documentation.

Pasternack Enterprises, Inc. • P.O. Box 16759, Irvine, CA 92623
Phone: (866) 727-8376 or (949) 261-1920 • **Fax:** (949) 261-7451
Sales@Pasternack.com • Techsupport@Pasternack.com

© 2020 Pasternack Enterprises All Rights Reserved

PE44604 CAD Drawing

QN Male Right Angle Low PIM Connector Solder Attachment for PE-SR402AL, PE-SR402FL, PE-SR402FLJ, PE-SR402TN, RG402, IP68

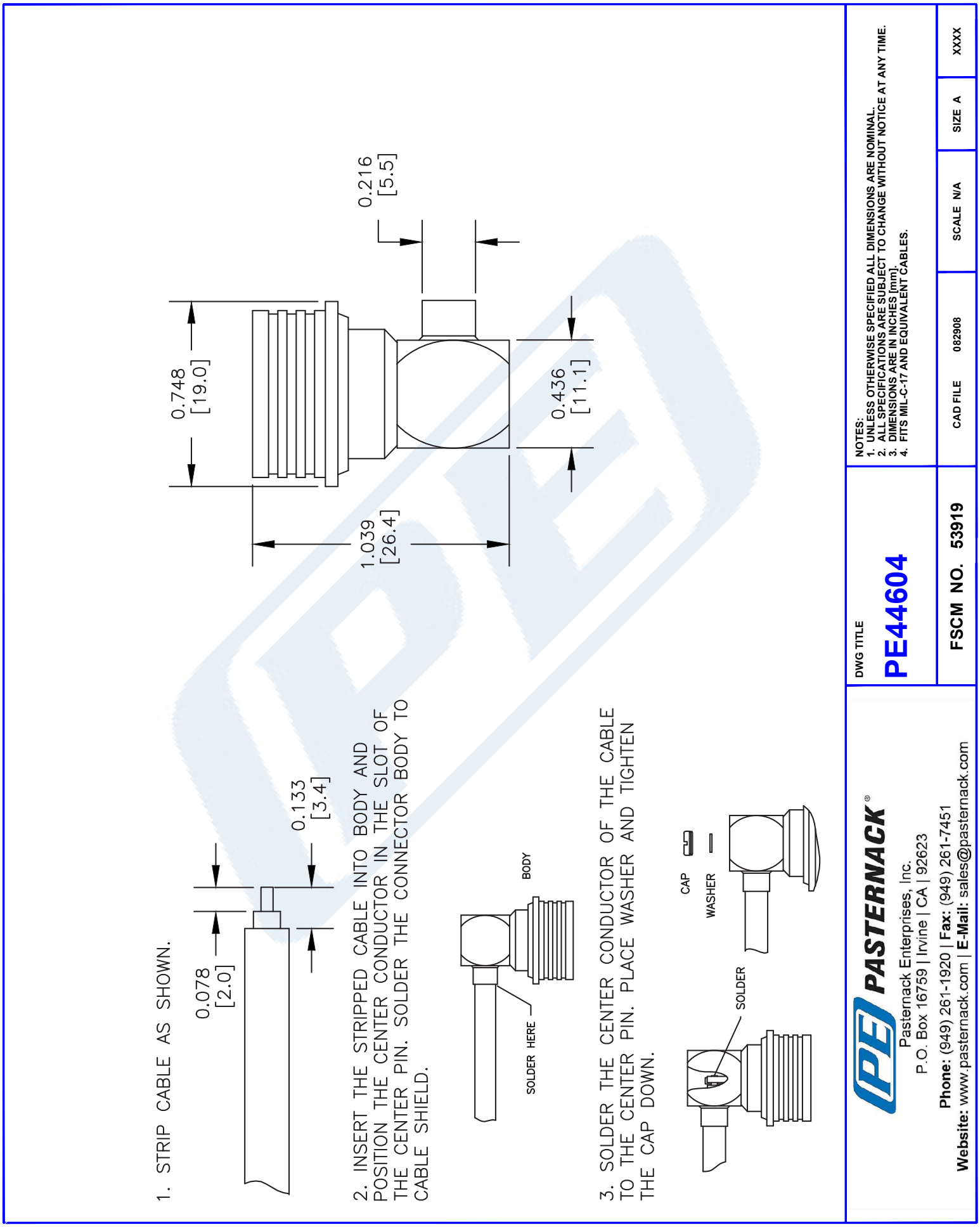

© 2020 Pasternack Enterprises All Rights Reserved

PASTERNACK®
THE ENGINEER'S RF SOURCE

QMA Male Right Angle Connector Solder Attachment for PE-SR402AL, PE-SR402FL, PE-SR402FLJ, PE-SR402TN, RG402

Configuration

- QMA Male Connector
- 50 Ohms
- Right Angle Body Geometry
- PE-SR402AL, PE-SR402FL, PE-SR402FLJ, PE-SR402TN, RG402 Interface Type
- Solder/Solder Attachment

Features

- Max. Operating Frequency 18 GHz
- PIM levels lower than -130 dBc
- Gold over Nickel Plated Brass Contact
- 0.15 µm minimum contact plating

Applications

- General Purpose Test
- Custom Cable Assemblies

Description

Pasternack's PE44498 QMA male right angle connector with solder/solder attachment for PE-SR402AL, PE-SR402FL, PE-SR402FLJ, PE-SR402TN and RG402 is part of our full line of RF components available for same-day shipping. Our QMA male connector operates up to a maximum frequency of 18 GHz. The QMA male connector also has low passive intermodulation of -130 dBc. Its right angle body geometry allows for easier connections in tight spaces.

Our QMA male right angle connector PE44498 datasheet specifications and drawing with dimensions are shown below in this PDF. Pasternack's broad catalog of RF, microwave and millimeter wave connectors allows designers to configure and customize their signal connections however they like. Whether the need is to provide an I/O for a board design, or simply create a custom cable assembly configuration, Pasternack has the right connector for the job. Pasternack can also expertly build your custom cable assemblies for you and ship same-day.

Electrical Specifications

Description	Minimum	Typical	Maximum	Units
Frequency Range	DC		18	GHz
Passive Intermodulation using 2x20W tones			-130	dBc
Operating Voltage (AC)			335	Vrms
Test Voltage (AC)			1,000	Vrms
Inner Conductor DC Resistance			3	mOhms
Outer Conductor DC Resistance			2.5	mOhms
Insulation Resistance	5,000			MOhms

Click the following link (or enter part number in "SEARCH" on website) to obtain additional part information including price, inventory and certifications: QMA Male Right Angle Connector Solder Attachment for PE-SR402AL, PE-SR402FL, PE-SR402FLJ, PE-SR402TN, RG402 PE44498

Pasternack Enterprises, Inc. • P.O. Box 16759, Irvine, CA 92623
Phone: (866) 727-8376 or (949) 261-1920 • **Fax:** (949) 261-7451
Sales@Pasternack.com • Techsupport@Pasternack.com

© 2016 Pasternack Enterprises All Rights Reserved

QMA Male Right Angle Connector Solder Attachment for PE-SR402AL, PE-SR402FL, PE-SR402FLJ, PE-SR402TN, RG402

Performance by Frequency

Description	F1	F2	F3	F4	F5	Units
Frequency Range	DC to 3	3 to 4	4 to 6			GHz
VSWR, Max	1.06:1	1.09:1	1.12:1			

Electrical Specification Notes:
RF leakage: 95 dB (up to 2 GHz), 80 dB (up to 4 GHz), 70 dB (up to 6 GHz) min.
Insertion loss = 0.05 x sqrt(fGHz) dB max up to 6 GHz.

Mechanical Specifications

Size

Length	0.713 in [18.11 mm]
Width/Dia.	0.413 in [10.49 mm]
Height	0.496 in [12.6 mm]
Weight	0.006 lbs [2.72 g]
Mating Cycles	100 Cycles

Material Specifications

Description	Material	Plating
Contact	Brass	Gold over Nickel 0.15 µm minimum
Insulation	PTFE	
Outer Conductor	Spring Bronze	Tri-Metal
Body	Brass	Gold 0.15 µm minimum

Environmental Specifications

Temperature

Operating Range	-40 to +85 deg C
Storage Range	-40 to +85 deg C
Humidity	IEC 60169-1 16.3 (96 hours)
Vibration	IEC 60068-2-64 random
Thermal Shock	IEC 60169-1 16.4 (-40/+85°C)
Salt Spray	IEC 60109-1 16.7 (48 hrs)

Click the following link (or enter part number in "SEARCH" on website) to obtain additional part information including price, inventory and certifications: QMA Male Right Angle Connector Solder Attachment for PE-SR402AL, PE-SR402FL, PE-SR402FLJ, PE-SR402TN, RG402 PE44498

Pasternack Enterprises, Inc. • P.O. Box 16759, Irvine, CA 92623
Phone: (866) 727-8376 or (949) 261-1920 • **Fax:** (949) 261-7451
Sales@Pasternack.com • Techsupport@Pasternack.com

© 2016 Pasternack Enterprises All Rights Reserved

QMA Male Right Angle Connector Solder Attachment for PE-SR402AL, PE-SR402FL, PE-SR402FLJ, PE-SR402TN, RG402

Compliance Certifications (see product page for current document)

Plotted and Other Data

Notes:

QMA Male Right Angle Connector Solder Attachment for PE-SR402AL, PE-SR402FL, PE-SR402FLJ, PE-SR402TN, RG402 from Pasternack Enterprises has same day shipment for domestic and International orders. Our RF, microwave and millimeter wave products maintain a 99% availability and are part of the broadest selection in the industry.

Click the following link (or enter part number in "SEARCH" on website) to obtain additional part information including price, inventory and certifications: QMA Male Right Angle Connector Solder Attachment for PE-SR402AL, PE-SR402FL, PE-SR402FLJ, PE-SR402TN, RG402 PE44498

URL: https://www.pasternack.com/qma-male-standard-pe-sr402al-pe-sr402fl-rg402-connector-pe44498-p.aspx

The information contained in this document is accurate to the best of our knowledge and representative of the part described herein. It may be necessary to make modifications to the part and/or the documentation of the part, in order to implement improvements. Pasternack reserves the right to make such changes as required. Unless otherwise stated, all specifications are nominal. Pasternack does not make any representation or warranty regarding the suitability of the part described herein for any particular purpose, and Pasternack does not assume any liability arising out of the use of any part or documentation.

Pasternack Enterprises, Inc. • P.O. Box 16759, Irvine, CA 92623
Phone: (866) 727-8376 or (949) 261-1920 • **Fax:** (949) 261-7451
Sales@Pasternack.com • Techsupport@Pasternack.com

© 2016 Pasternack Enterprises All Rights Reserved

PE44498 CAD Drawing

QMA Male Right Angle Connector Solder Attachment for PE-SR402AL, PE-SR402FL, PE-SR402FLJ, PE-SR402TN, RG402

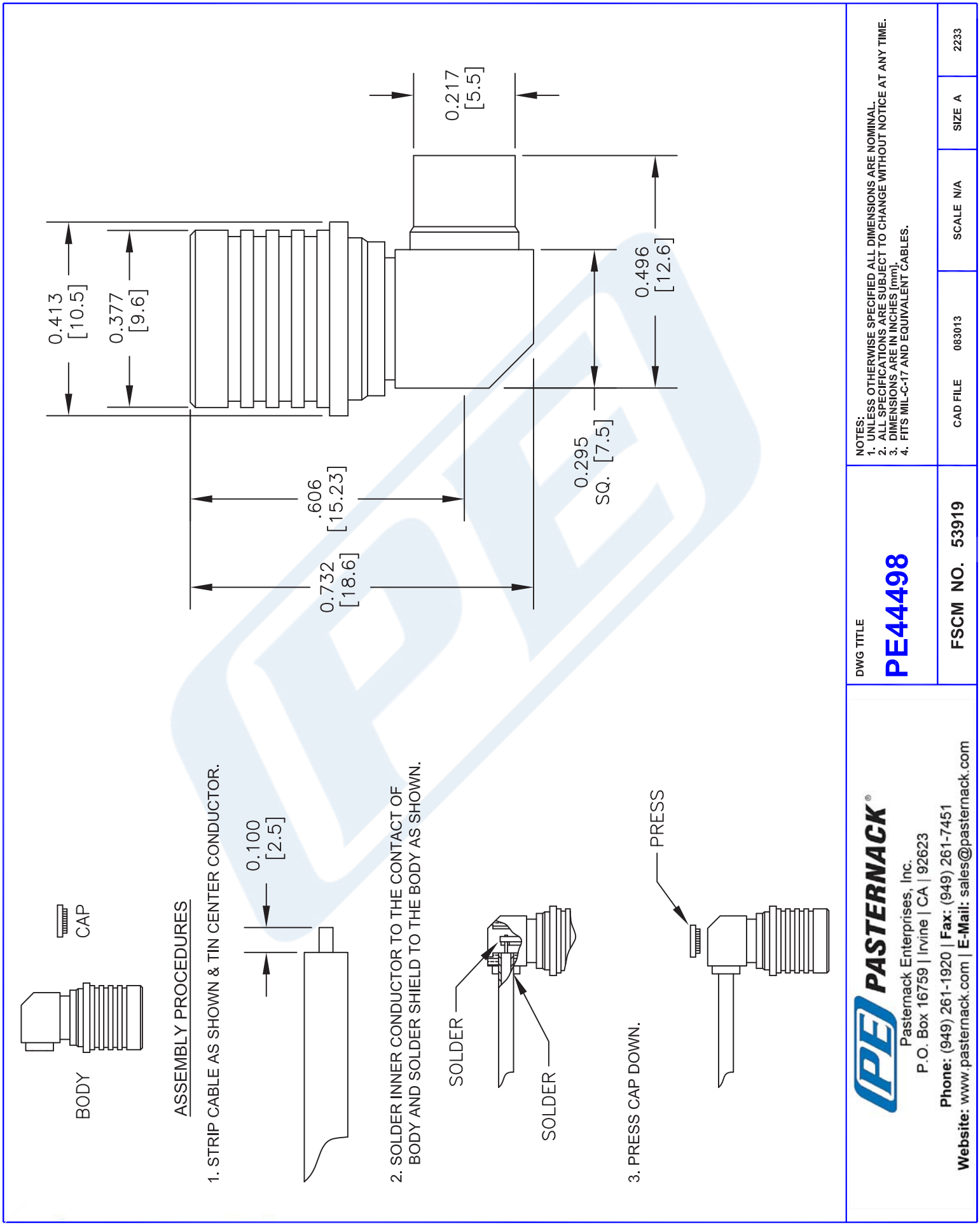

© 2016 Pasternack Enterprises All Rights Reserved

PASTERNACK
an INFINITE brand

RG402 Coax Cable with Copper Outer Conductor

RF Cables
Technical Data Sheet

RG402/U

Configuration

- Semi-Rigid Cable
- M17/130-RG402
- 1 Shield(s)

Electrical Specifications

Description	Minimum	Typical	Maximum	Units
Frequency Range	DC		34	GHz
Impedance		50		Ohms
Velocity of Propagation		69.5		%
Dielectric Withstanding Voltage (AC)			5,000	Vrms
Corona Discharge at 60 Hz			1,900	Vrms

Performance by Frequency Band

Description	F1	F2	F3	F4	F5	Units
Frequency	0.5	1	5	10	18	GHz
Attenuation, Typ	7.6	11.1	28.1	43.4	63.6	dB/100ft
	24.93	36.42	92.19	142.39	208.66	dB/100m
Input Power (CW), Max	600	450	180	120	73	Watts

Description	F6	F7	F8	F9	F10	Units
Frequency	26.5					GHz
Attenuation, Typ	82.8					dB/100ft
	271.65					dB/100m
Input Power (CW), Max	70					Watts

Mechanical Specifications

Min. Bend Radius (Repeated)	0.25 in [6.35 mm]

Click the following link (or enter part number in “SEARCH” on website) to obtain additional part information including price, inventory and certifications: RG402 Coax Cable with Copper Outer Conductor RG402/U

Pasternack Enterprises, Inc. • P.O. Box 16759, Irvine, CA 92623
Phone: (866) 727-8376 or (949) 261-1920 • **Fax:** (949) 261-7451
Sales@Pasternack.com • Techsupport@Pasternack.com

© 2020 Pasternack Enterprises All Rights Reserved

RG402 Coax Cable with Copper Outer Conductor

Construction Specifications

Description	Material and Plating	Diameter
Inner Conductor	Copper Clad Steel, Silver, 1 Strand	0.036 in 0.91 mm
Conductor Type	Solid	
Dielectric	PTFE	0.118 in [3 mm]
Outer Conductor	Copper .141	
Jacket	Tan	

Environmental Specifications

Temperature

Operating Range -55 to +125 deg C

Compliance Certifications (see product page for current document)

Plotted and Other Data

Notes:

RG402 Coax Cable with Copper Outer Conductor from Pasternack Enterprises has same day shipment for domestic and International orders. Our RF, microwave and millimeter wave products maintain a 99.4% availability and are part of the broadest selection in the industry.

Click the following link (or enter part number in “SEARCH” on website) to obtain additional part information including price, inventory and certifications: RG402 Coax Cable with Copper Outer Conductor RG402/U

URL: https://www.pasternack.com/semirigid-0.141-rg402-50-ohm-coax-cable-copper-rg402-u-p.aspx

The information contained in this document is accurate to the best of our knowledge and representative of the part described herein. It may be necessary to make modifications to the part and/or the documentation of the part, in order to implement improvements. Pasternack reserves the right to make such changes as required. Unless otherwise stated, all specifications are nominal. Pasternack does not make any representation or warranty regarding the suitability of the part described herein for any particular purpose, and Pasternack does not assume any liability arising out of the use of any part or documentation.

Pasternack Enterprises, Inc. • P.O. Box 16759, Irvine, CA 92623
Phone: (866) 727-8376 or (949) 261-1920 • **Fax:** (949) 261-7451
Sales@Pasternack.com • Techsupport@Pasternack.com

© 2020 Pasternack Enterprises All Rights Reserved

RG402/U CAD Drawing

RG402 Coax Cable with Copper Outer Conductor

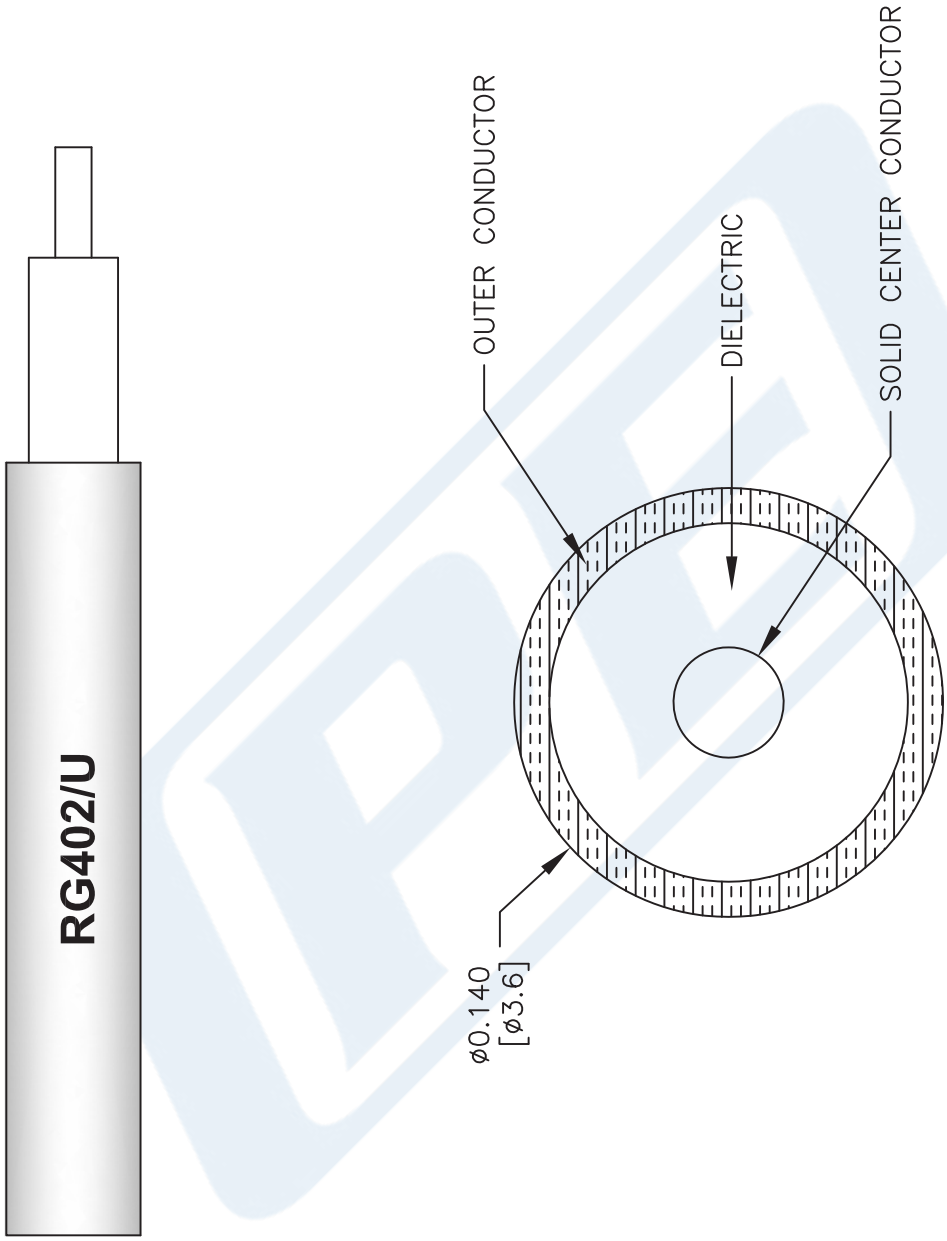

NOTES:
1. UNLESS OTHERWISE SPECIFIED ALL DIMENSIONS ARE NOMINAL.
2. ALL SPECIFICATIONS ARE SUBJECT TO CHANGE WITHOUT NOTICE AT ANY TIME.
3. DIMENSIONS ARE IN INCHES [mm].

DWG TITLE
RG402/U

FSCM NO. 53919

CAD FILE 111816 | SCALE N/A | SIZE A | 41742

PASTERNACK®
THE ENGINEER'S RF SOURCE
Pasternack Enterprises, Inc.
P.O. Box 16759 | Irvine | CA | 92623
Phone: (949) 261-1920 | **Fax:** (949) 261-7451
Website: www.pasternack.com | **E-Mail:** sales@pasternack.com

© 2020 Pasternack Enterprises All Rights Reserved