PASTERNACK
an INFINITE brand

RP-TNC Female Connector Crimp/Non-Solder Contact Attachment for LMR-200, PE-C200

RF Connectors
Technical Data Sheet

TIMES MICROWAVE SYSTEMS

EZ-200-TF-RP

Times Microwave Systems Connector Specification

Configuration

- TNC Female Reverse Polarity Connector
- 50 Ohms
- Straight Body Geometry
- Connector Interface Types: LMR-200, PE-C200

Features

- Max. Operating Frequency 3 GHz
- Excellent VSWR of 1.25:1
- Gold Plated Beryllium Copper Contact
- Reverse Polarity

Applications

- General Purpose Test
- Custom Cable Assemblies

Description

Pasternack's EZ-200-TF-RP RP TNC female connector with crimp/non-solder contact attachment for LMR-200 and PE-C200 is part of our full line of RF components available for same-day shipping. The female reverse polarity configuration uses a female connector body with a male inner contact pin. Our TNC female connector operates up to a maximum frequency of 3 GHz and offers excellent VSWR of 1.25:1.

Our reverse polarity TNC female connector EZ-200-TF-RP datasheet specifications and drawing with dimensions are shown below in this PDF. Pasternack's broad catalog of RF, microwave and millimeter wave connectors allows designers to configure and customize their signal connections however they like. Whether the need is to provide an I/O for a board design, or simply create a custom cable assembly configuration, Pasternack has the right connector for the job. Pasternack can also expertly build your custom cable assemblies for you and ship same-day.

Electrical Specifications

Description	Minimum	Typical	Maximum	Units
Frequency Range	DC		3	GHz
VSWR			1.25:1	
Insertion Loss			0.17	dB
Operating Voltage (AC)			500	Vrms

Mechanical Specifications

Size

Length	1.26 in [32 mm]
Width/Dia.	0.57 in [14.48 mm]

Click the following link (or enter part number in "SEARCH" on website) to obtain additional part information including price, inventory and certifications: RP-TNC Female Connector Crimp/Non-Solder Contact Attachment for LMR-200, PE-C200 EZ-200-TF-RP

Pasternack Enterprises, Inc. • P.O. Box 16759, Irvine, CA 92623
Phone: (866) 727-8376 or (949) 261-1920 • **Fax:** (949) 261-7451
Sales@Pasternack.com • Techsupport@Pasternack.com

© 2020 Pasternack Enterprises All Rights Reserved

RP-TNC Female Connector Crimp/Non-Solder Contact Attachment for LMR-200, PE-C200

Material Specifications

Description	Material	Plating
Contact	Beryllium Copper	Gold
Insulation	PTFE	
Outer Conductor	Brass	Tri-Metal
Body	Brass	Tri-Metal
Crimp Sleeve	Copper	Tri-Metal

Environmental Specifications

Compliance Certifications (see product page for current document)

Plotted and Other Data

Notes:

RP-TNC Female Connector Crimp/Non-Solder Contact Attachment for LMR-200, PE-C200 from Pasternack Enterprises has same day shipment for domestic and International orders. Our RF, microwave and millimeter wave products maintain a 99.4% availability and are part of the broadest selection in the industry.

Click the following link (or enter part number in “SEARCH” on website) to obtain additional part information including price, inventory and certifications: RP-TNC Female Connector Crimp/Non-Solder Contact Attachment for LMR-200, PE-C200 EZ-200-TF-RP

URL: https://www.pasternack.com/tnc-female-reverse-polarity-lmr-200-pe-c200-connector-ez-200-tf-rp-p.aspx

The information contained in this document is accurate to the best of our knowledge and representative of the part described herein. It may be necessary to make modifications to the part and/or the documentation of the part, in order to implement improvements. Pasternack reserves the right to make such changes as required. Unless otherwise stated, all specifications are nominal. Pasternack does not make any representation or warranty regarding the suitability of the part described herein for any particular purpose, and Pasternack does not assume any liability arising out of the use of any part or documentation.

Pasternack Enterprises, Inc. • P.O. Box 16759, Irvine, CA 92623
Phone: (866) 727-8376 or (949) 261-1920 • **Fax:** (949) 261-7451
Sales@Pasternack.com • Techsupport@Pasternack.com

© 2020 Pasternack Enterprises All Rights Reserved

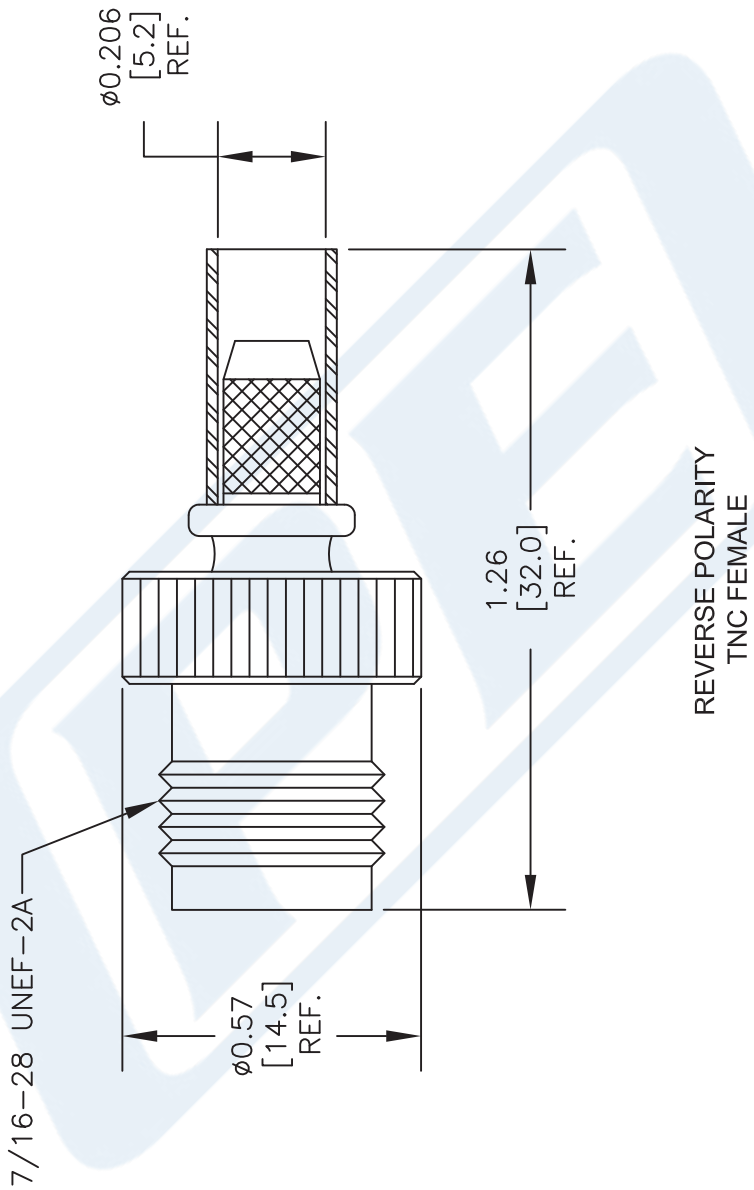

STANDARD TOLERANCES	
.X	±0.2
.XX	±0.1
.XXX	±0.05

*STANDARD TOLERANCES APPLY ONLY TO DIMENSIONS IN INCHES

NOTES:
1. UNLESS OTHERWISE SPECIFIED ALL DIMENSIONS ARE NOMINAL.
2. ALL SPECIFICATIONS ARE SUBJECT TO CHANGE WITHOUT NOTICE AT ANY TIME.
3. DIMENSIONS ARE IN INCHES [mm].

DWG TITLE
EZ-200-TF-RP

FSCM NO. 53919

CAD FILE 122216 | SCALE N/A | SIZE A | 41742

PASTERNACK® THE ENGINEER'S RF SOURCE
Pasternack Enterprises, Inc.
P.O. Box 16759 | Irvine | CA | 92623
Phone: (949) 261-1920 | **Fax:** (949) 261-7451
Website: www.pasternack.com | **E-Mail:** sales@pasternack.com

© 2020 Pasternack Enterprises All Rights Reserved

PASTERNACK®
THE ENGINEER'S RF SOURCE

QMA Male Snap-On Connector Crimp/Solder Attachment for LMR-200, PE-C200

Configuration

- Snap-On QMA Male Connector
- 50 Ohms
- Straight Body Geometry
- LMR-200, PE-C200 Interface Type
- Crimp/Solder Attachment

Features

- Operates to 18 GHz
- Quick Locking Snap On Connection
- Reduced connector to connector spacing
- 100 mating cycles
- No torque wrench required
- 360 degree rotation capability
- Electrically equivalent to SMA interface

Applications

- Telecommunication system
- Rack and Panel Mount Applications
- High connection density systems

Description

Pasternack's PE45224 Snap-On QMA Male connector is part of our full line of RF connectors available for same-day shipping. Our Male QMA connector operates to 18 GHz. The PE45224 provides excellent VSWR of 1.5:1 maximum to 6 GHz. The PE45224 Pasternack RF connector is designed for use with LMR-200 and PE-C200 and is attached to the body using a crimp connection and the center contact employs a solder connection.

QMA, or Quick Lock SMA, connectors allow for an easy snap-on connection that securely locks in place for an easy mating reliable connection. In addition to the time savings offered by the Snap-On interface the QMA interface allow for a tighter density than a Threaded SMA interface which requires the use of a torque wrench to properly complete the connection. The QMA interface is operational to 18 GHz but the products electrical parameters are optimized for use and are specified to 6 GHz when used on LMR-200 Coaxial cable. This QMA connector is QLF approved and insures intermateability with other QLF QMA products.

Electrical Specifications

Description	Minimum	Typical	Maximum	Units
Frequency Range	DC		6	GHz
VSWR			1.5:1	
Operating Voltage (AC)			335	Vrms
Dielectric Withstanding Voltage (AC)			1,000	
Insulation Resistance	5,000			MOhms

Mechanical Specifications

Size

Length	1.12 in [28.45 mm]
Width/Dia.	0.41 in [10.41 mm]

Click the following link (or enter part number in "SEARCH" on website) to obtain additional part information including price, inventory and certifications: QMA Male Snap-On Connector Crimp/Solder Attachment for LMR-200, PE-C200 PE45224

Pasternack Enterprises, Inc. • P.O. Box 16759, Irvine, CA 92623
Phone: (866) 727-8376 or (949) 261-1920 • **Fax:** (949) 261-7451
Sales@Pasternack.com • Techsupport@Pasternack.com

© 2016 Pasternack Enterprises All Rights Reserved

QMA Male Snap-On Connector Crimp/Solder Attachment for LMR-200, PE-C200

Weight	0.019 lbs [8.62 g]
Mating Cycles	100 Cycles

Material Specifications

Description	Material	Plating
Contact	Brass	Gold 51µ in. minimum
Insulation	PTFE	
Body	Brass	Tri-Metal
Coupling Nut	Brass	Tri-Metal

Environmental Specifications

Temperature

Operating Range	-40 to 80 deg C
Hermetic Seal	ATM. cm3/s

Compliance Certifications (visit www.Pasternack.com for current document)

RoHS Compliant	
REACH Compliant	12/17/2015

Plotted and Other Data

Notes:

QMA Male Snap-On Connector Crimp/Solder Attachment for LMR-200, PE-C200 from Pasternack Enterprises has same day shipment for domestic and International orders. Our RF, microwave and millimeter wave products maintain a 99% availability and are part of the broadest selection in the industry.

Click the following link (or enter part number in "SEARCH" on website) to obtain additional part information including price, inventory and certifications: QMA Male Snap-On Connector Crimp/Solder Attachment for LMR-200, PE-C200 PE45224

URL: https://www.pasternack.com/qma-male-snap-on-lmr-200-pe-c200-connector-pe45224-p.aspx

The information contained in this document is accurate to the best of our knowledge and representative of the part described herein. It may be necessary to make modifications to the part and/or the documentation of the part, in order to implement improvements. Pasternack reserves the right to make such changes as required. Unless otherwise stated, all specifications are nominal. Pasternack does not make any representation or warranty regarding the suitability of the part described herein for any particular purpose, and Pasternack does not assume any liability arising out of the use of any part or documentation.

Pasternack Enterprises, Inc. • P.O. Box 16759, Irvine, CA 92623
Phone: (866) 727-8376 or (949) 261-1920 • **Fax:** (949) 261-7451
Sales@Pasternack.com • Techsupport@Pasternack.com

© 2016 Pasternack Enterprises All Rights Reserved

PE45224 CAD Drawing

QMA Male Snap-On Connector Crimp/Solder Attachment for LMR-200, PE-C200

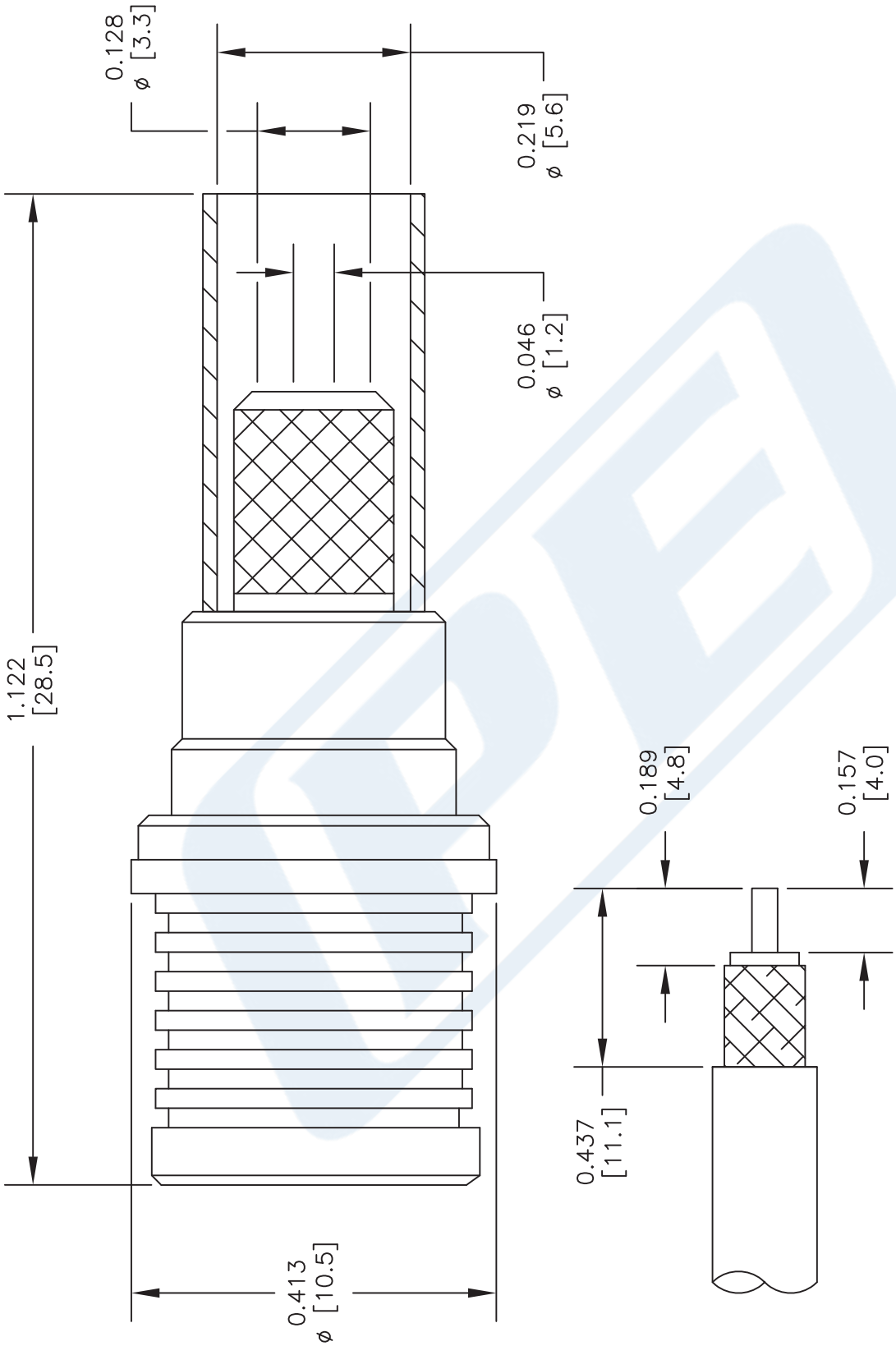

STRIPPING DIMENSIONS

CRIMP SIZE REQUIRED

CONTACT: SOLDER
FERRULE: .213" HEX CRIMP TOOL

NOTES:
1. UNLESS OTHERWISE SPECIFIED ALL DIMENSIONS ARE NOMINAL.
2. ALL SPECIFICATIONS ARE SUBJECT TO CHANGE WITHOUT NOTICE AT ANY TIME.
3. DIMENSIONS ARE IN INCHES [mm].

DWG TITLE
PE45224

FSCM NO. 53919

CAD FILE 061716 | SCALE N/A | SIZE A | 2233

PASTERNACK®
THE ENGINEER'S RF SOURCE
Pasternack Enterprises, Inc.
P.O. Box 16759 | Irvine | CA | 92623
Phone: (949) 261-1920 | **Fax:** (949) 261-7451
Website: www.pasternack.com | **E-Mail:** sales@pasternack.com

© 2016 Pasternack Enterprises All Rights Reserved

TIMES MICROWAVE SYSTEMS

LMR®-200
Flexible Low Loss Communications Coax

Ideal for...

- Jumper Assemblies in Wireless Communications Systems
- Short Antenna Feeder runs
- Any application (e.g. WLL, GPS, LMR, WLAN, WISP, WiMax, SCADA, Mobile Antennas) requiring an easily routed, low loss RF cable

• **LMR®** standard is a UV Resistant Polyethylene jacketed cable designed for 20-year service outdoor use. The bending and handling characteristics are significantly better than air-dielectric and corrugated hard-line cables.

• **LMR®- DB** is identical to standard LMR plus has the advantage of being watertight. The addition of waterproofing compound in and around the foil/braid insures continuous reliable service should the jacket be inadvertently damaged during installation or in the future.

• **LMR®- FR** is a non-halogen (non-toxic), low smoke, fire retardant cable designed for in-building runs that can be routed anywhere except air handling plenums. LMR-FR is UL/NEC & CSA rated'CMR' and 'FT4' respectively, meets FAA FAR25 requirements and is MSHA-P for mining applications.

• **LMR®- FR-PVC** is a general-purpose indoor cable and has a UL/NEC & CSA rating of 'CMR' and 'FT4' respectively. It is less expensive than LMR-FR, however it emits toxic fumes (HCL) and greater smoke density when burned.

• **LMR®- PVC** is designed for low loss general-purpose applications and is somewhat more flexible than the standard polyethylene jacketed LMR.

• **LMR®- PVC-W** is a white-jacketed version of LMR-PVC for marine and other applications where color compatibility is desired.

• **LMR®- MA** is a flexible cable designed specifically for mobile antenna applications. It has a PVC jacket and un-bonded aluminum tape to facilitate end stripping with automated equipment.

• **Flexibility** and bendability are hallmarks of the LMR-200 cable design. The flexible outer conductor enables the tightest bend radius available for any cable of similar size and performance.

• **Low Loss** is another hallmark feature of LMR-200. Size for size LMR has the lowest loss of any flexible cable and comparable loss to semirigid hard-line cables.

• **RF Shielding** is 50 dB greater than typical single shielded coax (40 dB). The multi-ply bonded foil outer conductor is rated conservatively at > 90 dB (i.e. >180 dB between two adjacent cables).

• **Weatherability**: LMR-200 cables designed for outdoor exposure incorporate the best materials for UV resistance and have life expectancy in excess of 20 years.

• **Connectors**: A wide variety of connectors are available for LMR-200 cable, including all common interface types, reverse polarity, and a choice of solder or non-solder center pins. Most LMR connectors employ crimp outer attachment using standard hex crimp sizes.

• **Cable Assemblies**: All LMR-200 cable types are available as pre-terminated cable assemblies. Refer to the section on FlexTech for further details.

Part Description

Part Number	Application	Jacket	Color	Stock Code
LMR-200	Outdoor	PE	Black	54022
LMR-200-DB	Outdoor/Watertight	PE	Black	54089
LMR-200-FR	Indoor/Outdoor Riser CMR	FRPE	Black	54028
LMR-200-FR-PVC	Indoor/OutdoorRiser CMR	FRPVC	Black	54125
LMR-200-PVC	General Purpose	PVC	Black	54216
LMR-200-PVC-W	General Purpose	PVC	White	54201
LMR-200-MA	Mobile Antennas	PVC	Black	54045

Construction Specifications

Description	Material	In.	(mm)
Inner Conductor	Solid BC	0.044	(1.12)
Dielectric	Foam PE	0.116	(2.95)
Outer Conductor	Aluminum Tape	0.121	(3.07)
Overall Braid	Tinned Copper	0.144	(3.66)
Jacket	(see table above)	0.195	(4.95)

Mechanical Specifications

Performance Property	Units	US	(metric)
Bend Radius: installation	in. (mm)	0.5	(12.7)
Bend Radius: repeated	in. (mm)	2	(50.8)
Bending Moment	ft-lb (N-m)	0.2	(0.27)
Weight	lb/ft (kg/m)	0.022	(0.03)
Tensile Strength	lb (kg)	40	(48)
Flat Plate Crush	lb/in. (kg/mm)	15	(0.27)

Environmental Specifications

Performance Property	°F	°C
Installation Temperature Range	-40/+185	-40/+85
Storage Temperature Range	-94/+185	-70/+85
Operating Temperature Range	-40/+185	-40/+85

Electrical Specifications

Performance Property	Units	US	(metric)
Velocity of Propagation	%	83	
Dielectric Constant	NA	1.45	
Time Delay	nS/ft (nS/m)	1.22	(4.02)
Impedance	ohms	50	
Capacitance	pF/ft (pF/m)	24.5	(80.3)
Inductance	uH/ft (uH/m)	0.061	(0.20)
Shielding Effectiveness	dB	>90	
DC Resistance			
Inner Conductor	ohms/1000ft (/km)	5.36	(17.6)
Outer Conductor	ohms/1000ft (/km)	4.9	(16.1)
Voltage Withstand	Volts DC	1000	
Jacket Spark	Volts RMS	3000	
Peak Power	kW	2.5	

Attenuation vs. Frequency (typical)

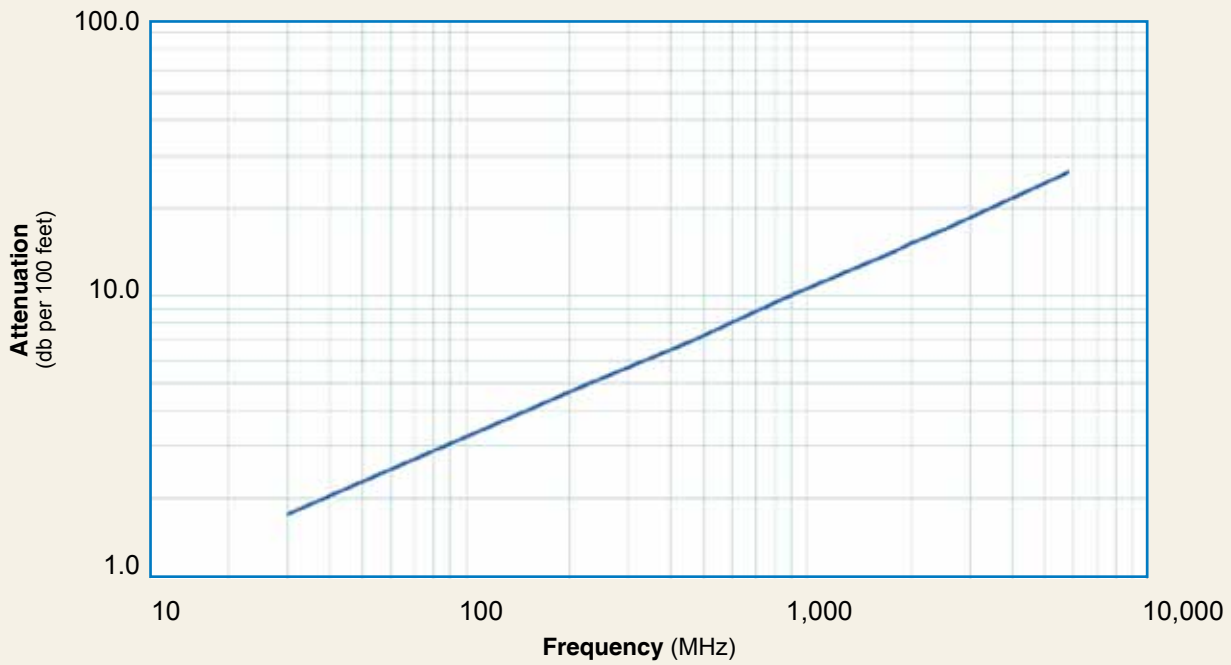

Frequency (MHz)	30	50	150	220	450	900	1500	1800	2000	2500	5800
Attenuation dB/100 ft	1.8	2.3	4.0	4.8	7.0	9.9	12.9	14.2	15.0	16.9	26.4
Attenuation dB/100 m	5.8	7.5	13.1	15.9	22.8	32.6	42.4	46.6	49.3	55.4	86.5
Avg. Power kW	1.02	0.79	0.45	0.37	0.26	0.18	0.14	0.13	0.12	0.11	0.07

Calculate Attenuation =

$(0.320900) \cdot \sqrt{FMHz} + (0.000330) \cdot FMHz$ (interactive calculator available at http://www.timesmicrowave.com/cable_calculators)

Attenuation:

VSWR=1.0; Ambient = +25°C (77°F)

Power:

VSWR=1.0; Ambient = +40°C; Inner Conductor = 100°C (212°F); Sea Level; dry air; atmospheric pressure; no solar loading

TIMES MICROWAVE SYSTEMS

LMR®-200
Flexible Low Loss Communications Coax

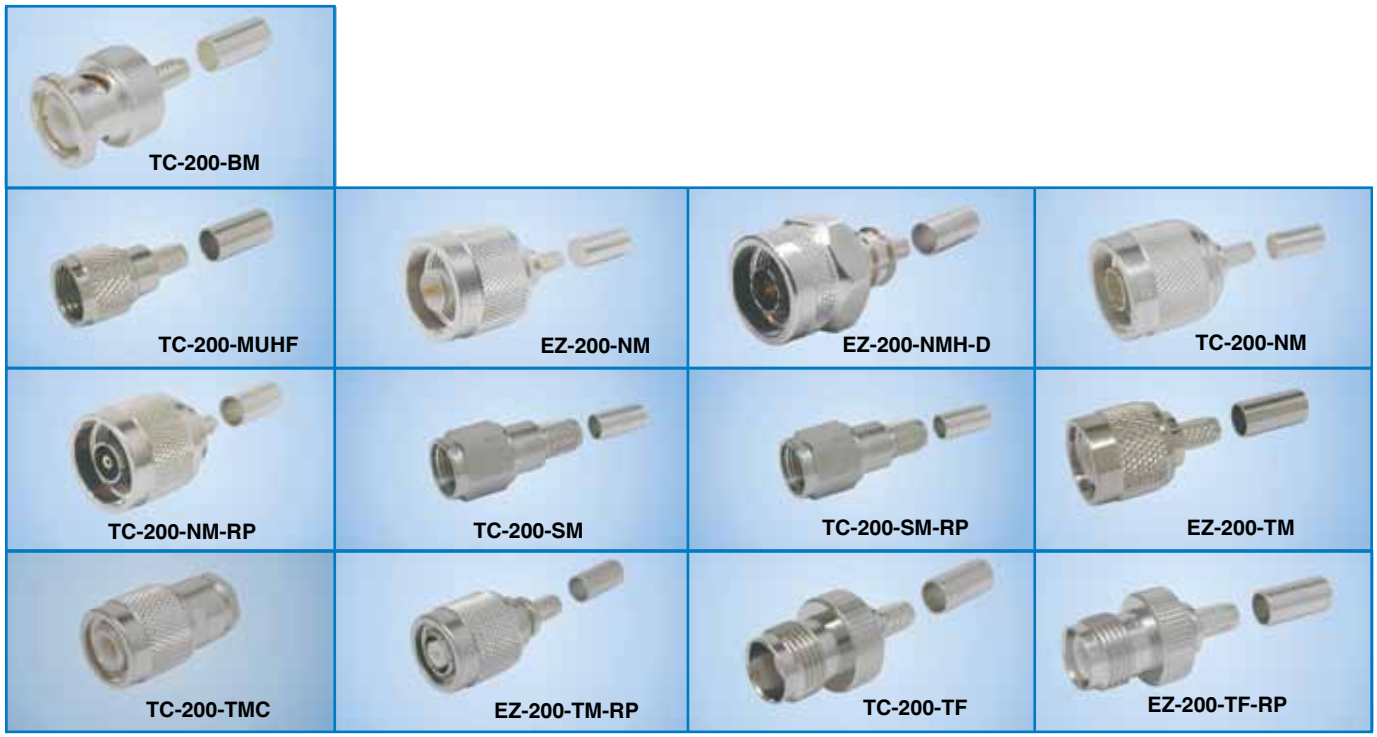

Connectors

Interface	Description	Part Number	Stock Code	VSWR** Freq. (GHz)	Coupling Nut	Inner Contact Attach	Outer Contact Attach	Finish* Body /Pin	Length in	Length (mm)	Width in	Width (mm)	Weight lb	Weight (g)
BNC male	Straight Plug	TC-200-BM	3190-225	<1.25:1 (2.5)	Knurl	Solder	Crimp	S/G	1.7	(43.2)	0.56	(14.2)	0.045	(20.4)
Mini-UHF	Straight Plug	TC-200-MUHF	3190-444	<1.25:1 (2.5)	Knurl	Solder	Crimp	NG	1.1	(27.9)	0.45	(11.4)	0.015	(6.8)
N male	Straight Plug	EZ-200-NM	3190-1475	<1.25:1 (8)	Knurl	Spring Fit	Crimp	S/G	1.5	(38.1)	0.75	(19.1)	0.073	(33.1)
N male	Straight Plug	EZ-200-NMH-D	3190-1918	<1.25:1 (8)	Hex/Knurl	Spring Fit	Crimp	A/G	1.5	(38.1)	0.75	(19.1)	0.073	(33.1)
N male	Straight Plug	TC-200-NM	3190-224	<1.25:1 (2.5)	Knurl	Solder	Crimp	S/G	1.5	(38.1)	0.75	(19.1)	0.073	(33.1)
N male	Reverse Polarity	TC-200-NM-RP	3190-959	<1.25:1 (2.5)	Knurl	Solder	Crimp	N/G	1.5	(38.1)	0.75	(19.1)	0.073	(33.1)
SMA male	Straight Plug	TC-200-SM	3190-612	<1.25:1 (8)	Hex	Solder	Crimp	SS/G	1.0	(25.4)	0.32	(8.1)	0.015	(6.8)
SMA male	Reverse Polarity	TC-200-SM-RP	3190-327	<1.25:1 (2.5)	Hex	Solder	Crimp	SS/G	1.0	(25.4)	0.32	(8.1)	0.015	(6.8)
TNC male	Straight Plug	EZ-200-TM	3190-1266	<1.25:1 (2.5)	Knurl	Spring Fit	Crimp	S/G	1.4	(35.6)	0.59	(15.0)	0.045	(20.4)
TNC male	Straight Plug	TC-200-TMC	3190-240	<1.25:1 (2.5)	Knurl	Solder	Clamp	S/G	1.7	(43.2)	0.59	(15.0)	0.045	(20.4)
TNC male	Reverse Polarity	EZ-200-TM-RP	3190-792	<1.25:1 (2.5)	Knurl	Spring Fit	Crimp	A/G	1.4	(35.6)	0.32	(8.1)	0.045	(20.4)
TNC female	Straight Jack	TC-200-TF	3190-263	<1.25:1 (2.5)	NA	Solder	Crimp	N/G	1.3	(33.0)	0.57	(14.5)	0.033	(15.0)
TNC female	Reverse Polarity	EZ-200-TF-RP	3190-793	<1.25:1 (2.5)	NA	Spring Fit	Crimp	A/G	1.3	(33.0)	0.57	(14.5)	0.033	(15.0)

* Finish metals: N=Nickel, S=Silver, G=Gold, SS=Stainless Steel, A=Alballoy **VSWR spec based on 3 foot cable with a connector pair

GK-S200TT

Hardware Accessories

Type	Part Number	Stock Code	Description
Ground Kit	GK-S200TT	GK-S200TT	Standard Ground Kit (each)

CT-240/200/195/100

DBT-U

CCT-01

Install Tools

Type	Part Number	Stock Code	Description
Crimp Tool	CT-240/200/195/100	3190-667	Crimp tool for LMR-100, 195, 200 and 240 connectors
Cutting Tool	CCT-01	3190-1544	Cable end flush cut tool
Deburr Tool	DBT-U	3192-001	Removes center conductor rough edges
Replacement Blade	RB-01	3190-1609	Replacement blade for cutting tool