PASTERNACK
an INFINITE brand

SHV jack crimp for RG142,RG400

RF Connectors
Technical Data Sheet

PE45854

Configuration

- SHV Jack Connector
- MIL-STD-348B
- 50 Ohms
- Straight Body Geometry
- Connector Interface Types: RG142, RG400

Features

- Max. Operating Frequency 300 MHz
- Gold over Nickel over copper Plated Brass Contact

Applications

- General Purpose Test
- Custom Cable Assemblies

Description

Pasternack's PE45854 SHV jack connector with crimp/solder attachment for RG142 and RG400 is part of our full line of RF components available for same-day shipping. Our SHV jack connector operates up to a maximum frequency of 300 MHz.

Our SHV jack connector PE45854 datasheet specifications and drawing with dimensions are shown below in this PDF. Pasternack's broad catalog of RF, microwave and millimeter wave connectors allows designers to configure and customize their signal connections however they like. Whether the need is to provide an I/O for a board design, or simply create a custom cable assembly configuration, Pasternack has the right connector for the job. Pasternack can also expertly build your custom cable assemblies for you and ship same-day.

Electrical Specifications

Description	Minimum	Typical	Maximum	Units
Frequency Range	DC		300	MHz
Operating Voltage (AC)			3,500	Vrms
Dielectric Withstanding Voltage (AC)			5,000	Vrms
Inner Conductor DC Resistance			2	mOhms
Outer Conductor DC Resistance			1.5	mOhms

Mechanical Specifications

Size

Length	1.82 in [46.23 mm]
Width/Dia.	0.43 in [10.92 mm]
Height	0.43 in [10.92 mm]
Weight	0.048 lbs [21.77 g]

Click the following link (or enter part number in "SEARCH" on website) to obtain additional part information including price, inventory and certifications: SHV jack crimp for RG142,RG400 PE45854

Pasternack Enterprises, Inc. • P.O. Box 16759, Irvine, CA 92623
Phone: (866) 727-8376 or (949) 261-1920 • **Fax:** (949) 261-7451
Sales@Pasternack.com • Techsupport@Pasternack.com

© 2020 Pasternack Enterprises All Rights Reserved

SHV jack crimp for RG142,RG400

RF Connectors
Technical Data Sheet

PE45854

Material Specifications

Description	Material	Plating
Contact	Brass	Gold over Nickel over copper
Insulation	Teflon	
Body	Brass	Tinned Copper
Crimp Sleeve	Brass	Tinned Copper

Environmental Specifications

Temperature

Operating Range	-65 to +165 deg C
Thermal Shock	MIL-STD-202, Method 107, Condition B

Compliance Certifications (see product page for current document)

Plotted and Other Data

Notes:

SHV jack crimp for RG142,RG400 from Pasternack Enterprises has same day shipment for domestic and International orders. Our RF, microwave and millimeter wave products maintain a 99.4% availability and are part of the broadest selection in the industry.

Click the following link (or enter part number in “SEARCH” on website) to obtain additional part information including price, inventory and certifications: SHV jack crimp for RG142,RG400 PE45854

URL: https://www.pasternack.com/shv-jack-rg142-rg400-connector-pe45854-p.aspx

The information contained in this document is accurate to the best of our knowledge and representative of the part described herein. It may be necessary to make modifications to the part and/or the documentation of the part, in order to implement improvements. Pasternack reserves the right to make such changes as required. Unless otherwise stated, all specifications are nominal. Pasternack does not make any representation or warranty regarding the suitability of the part described herein for any particular purpose, and Pasternack does not assume any liability arising out of the use of any part or documentation.

Pasternack Enterprises, Inc. • P.O. Box 16759, Irvine, CA 92623
Phone: (866) 727-8376 or (949) 261-1920 • **Fax:** (949) 261-7451
Sales@Pasternack.com • Techsupport@Pasternack.com

© 2020 Pasternack Enterprises All Rights Reserved

PE45854 CAD Drawing

SHV jack crimp for RG142,RG400

REVISIONS			
REV.	DESCRIPTION	DATE	APPROVED
A	INITIAL RELEASE	09/13/2022	AGANWANI

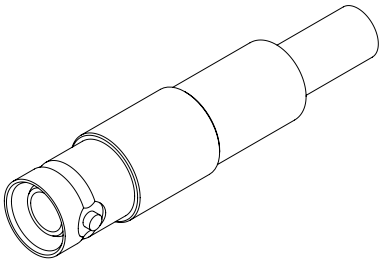

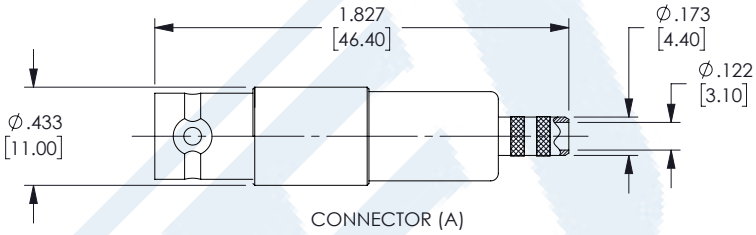

CONNECTOR (A)

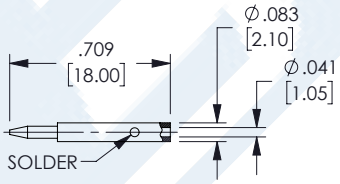

CONTACT (B)

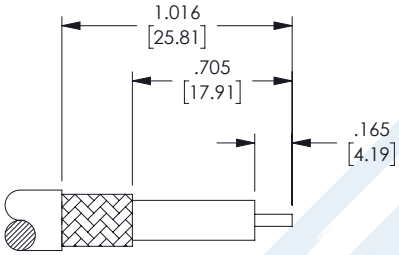

STRIPPING DIMENSIONS

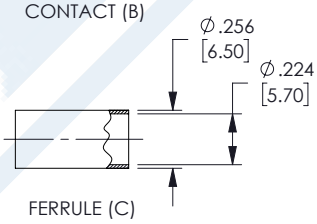

FERRULE (C)

CRIMP SIZE REQUIRED
CONTACT: SOLDER
FERRULE: .217 [5.5] HEX CRIMP TOOL

ASSEMBLY INSTRUCTIONS:

1. STRIP THE CABLE AS SHOWN. DO NOT NICK CENTER CONDUCTOR.
2. SLIDE THE FERRULE (C) OVER THE CABLE JACKET.
3. PLACE THE CONTACT (B) ONTO THE CENTER CONDUCTOR. SOLDER CONTACT TO CENTER CONDUCTOR.
4. LOOSEN THE CABLE BRAID, THEN SLIDE THE CONNECTOR (A) INTO PLACE. THE CABLE BRAID MUST OVERLAP THE KNURLED SECTION AT THE REAR END OF THE CONNECTOR (A).
5. SLIDE THE FERRULE (C) OVER THE CABLE BRAID AND CRIMP IN PLACE.

THESE COMMODITIES, TECHNOLOGY OR SOFTWARE WERE EXPORTED FROM THE UNITED STATES IN ACCORDANCE WITH THE EXPORT ADMINISTRATION REGULATIONS. DIVERSION CONTRARY TO U.S. LAW PROHIBITED.

UNLESS OTHERWISE SPECIFIED
LEADING DIMENSIONS ARE INCHES
DIMENSIONS IN [ ] ARE MILLIMETERS

TOLERANCES:
.X = ± .2 [5.08]
.XX = ± .02 [.51]
.XXX = ± .005 [.13]
FRACTIONS ± 1/32
ANGLES ± 1°

CABLE LENGTH (L) TOLERANCES:
L ≤ 12 [305] = +1 [25] / -0
12 [305] < L ≤ 60 [1524] = +2 [51] / -0
60 [1524] < L ≤ 120 [3048] = +4 [102] / -0
120 [3048] < L ≤ 300 [7620] = +6 [152] / -0
300 [7620] < L = +5%L / -0

ALL DIMENSIONS SHOWN ARE FOR REFERENCE ONLY.

PASTERNACK an INFINITE brand
Pasternack Enterprises, Inc.
P.O.Box 16759, Irvine, CA 92623.
Phone: 1.949.261.1920 | 1.866.727.8376
Fax: 1.949.261.7451
Website: www.pasternack.com
E-mail: sales@pasternack.com

THIRD-ANGLE PROJECTION

THE INFORMATION AND DESIGN IN THIS DOCUMENT IS THE PROPERTY OF PASTERNACK CORPORATION ALL RIGHTS RESERVED.

SHEET 1 OF 1
SCALE N/A

SIZE	CAGE CODE	DRAWN BY	ITEM NO.	REV
A	53919	AKRESOWSK	PE45854	A

T-Rev.D

PASTERNACK
an INFINITE brand

SMA Male Connector Crimp/Solder Attachment for RG55, RG142, RG223, RG400, RG141

RF Connectors
Technical Data Sheet

PE4008

Configuration

- SMA Male Connector
- MIL-STD-348A
- 50 Ohms
- Straight Body Geometry
- Connector Interface Types: RG55, RG142, RG223, RG400, RG141
- 5/16 inch Hex

Features

- Max. Operating Frequency 12.4 GHz
- Good VSWR of 1.28:1
- Gold Plated Brass Contact
- 50 µin minimum contact plating

Applications

- General Purpose Test
- Custom Cable Assemblies

Description

Pasternack's PE4008 SMA male connector with crimp/solder attachment for RG55, RG142, RG223, RG400 and RG141 is part of our full line of RF components available for same-day shipping. Our SMA male connector operates up to a maximum frequency of 12.4 GHz and offers good VSWR of 1.28:1.

Our SMA male connector PE4008 datasheet specifications and drawing with dimensions are shown below in this PDF. Pasternack's broad catalog of RF, microwave and millimeter wave connectors allows designers to configure and customize their signal connections however they like. Whether the need is to provide an I/O for a board design, or simply create a custom cable assembly configuration, Pasternack has the right connector for the job. Pasternack can also expertly build your custom cable assemblies for you and ship same-day.

Electrical Specifications

Description	Minimum	Typical	Maximum	Units
Frequency Range	DC		12.4	GHz
VSWR			1.28:1	
Operating Voltage (AC)			500	Vrms

Mechanical Specifications

Size	
Length	0.901 in [22.89 mm]
Width/Dia.	0.315 in [8.00 mm]
Weight	0.015 lbs [6.8 g]
Mating Torque	3 to 5 in-lbs [0.34 to 0.57 Nm]

Click the following link (or enter part number in "SEARCH" on website) to obtain additional part information including price, inventory and certifications: SMA Male Connector Crimp/Solder Attachment for RG55, RG142, RG223, RG400, RG141 PE4008

Pasternack Enterprises, Inc. • P.O. Box 16759, Irvine, CA 92623
Phone: (866) 727-8376 or (949) 261-1920 • **Fax:** (949) 261-7451
Sales@Pasternack.com • Techsupport@Pasternack.com

© 2020 Pasternack Enterprises All Rights Reserved

SMA Male Connector Crimp/Solder Attachment
for RG55, RG142, RG223, RG400, RG141

Material Specifications

Description	Material	Plating
Contact	Brass	Gold 50 µin minimum
Insulation	PTFE	
Body	Brass	Nickel 100 µin minimum
Coupling Nut	Brass	Nickel 100 µin minimum
Crimp Sleeve	Brass	Nickel

Environmental Specifications

Temperature

Operating Range -65 to +165 deg C

Compliance Certifications (see product page for current document)

Plotted and Other Data

Notes:

Click the following link (or enter part number in “SEARCH” on website) to obtain additional part information including price, inventory and certifications: SMA Male Connector Crimp/Solder Attachment for RG55, RG142, RG223, RG400, RG141 PE4008

Pasternack Enterprises, Inc. • P.O. Box 16759, Irvine, CA 92623
Phone: (866) 727-8376 or (949) 261-1920 • **Fax:** (949) 261-7451
Sales@Pasternack.com • Techsupport@Pasternack.com

© 2020 Pasternack Enterprises All Rights Reserved

SMA Male Connector Crimp/Solder Attachment for RG55, RG142, RG223, RG400, RG141

Assembly Instruction

*

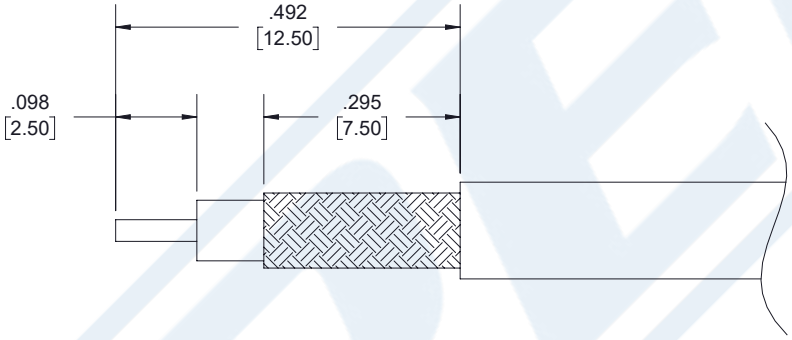

ASSEMBLY PROCEDURES

1. STRIP CABLE TO THE DIMENSIONS SHOWN, DO NOT NICK CENTER CONDUCTOR OR BRAID.
2. PUSH CENTER CONDUCTOR FULLY INTO CONTACT AND SOLDER, REMOVE ANY EXCESS SOLDER .
3. FLARE BRAID AND INSERT CONTACT INTO THE BODY UNTIL IT SEATS.
4. SLIDE FERRULE OVER BRAID AND CRIMP WITH CRIMP TOOL.

CRIMP SIZE REQUIRED

- CONTACT: SOLDER.
- FERRULE: .213 HEX CRIMP TOOL.

Click the following link (or enter part number in “SEARCH” on website) to obtain additional part information including price, inventory and certifications: SMA Male Connector Crimp/Solder Attachment for RG55, RG142, RG223, RG400, RG141 PE4008

Pasternack Enterprises, Inc. • P.O. Box 16759, Irvine, CA 92623
Phone: (866) 727-8376 or (949) 261-1920 • **Fax:** (949) 261-7451
Sales@Pasternack.com • Techsupport@Pasternack.com

© 2020 Pasternack Enterprises All Rights Reserved

PASTERNACK
an INFINITE brand

SMA Male Connector Crimp/Solder Attachment for RG55, RG142, RG223, RG400, RG141

RF Connectors
Technical Data Sheet

PE4008

SMA Male Connector Crimp/Solder Attachment for RG55, RG142, RG223, RG400, RG141 from Pasternack Enterprises has same day shipment for domestic and International orders. Our RF, microwave and millimeter wave products maintain a 99.4% availability and are part of the broadest selection in the industry.

Click the following link (or enter part number in “SEARCH” on website) to obtain additional part information including price, inventory and certifications: SMA Male Connector Crimp/Solder Attachment for RG55, RG142, RG223, RG400, RG141 PE4008

URL: https://www.pasternack.com/sma-male-standard-rg55-rg142-rg223-rg400-connector-pe4008-p.aspx

The information contained in this document is accurate to the best of our knowledge and representative of the part described herein. It may be necessary to make modifications to the part and/or the documentation of the part, in order to implement improvements. Pasternack reserves the right to make such changes as required. Unless otherwise stated, all specifications are nominal. Pasternack does not make any representation or warranty regarding the suitability of the part described herein for any particular purpose, and Pasternack does not assume any liability arising out of the use of any part or documentation.

Pasternack Enterprises, Inc. • P.O. Box 16759, Irvine, CA 92623
Phone: (866) 727-8376 or (949) 261-1920 • **Fax:** (949) 261-7451
Sales@Pasternack.com • Techsupport@Pasternack.com

© 2020 Pasternack Enterprises All Rights Reserved

PE4008 CAD Drawing

SMA Male Connector Crimp/Solder Attachment for RG55, RG142, RG223, RG400, RG141

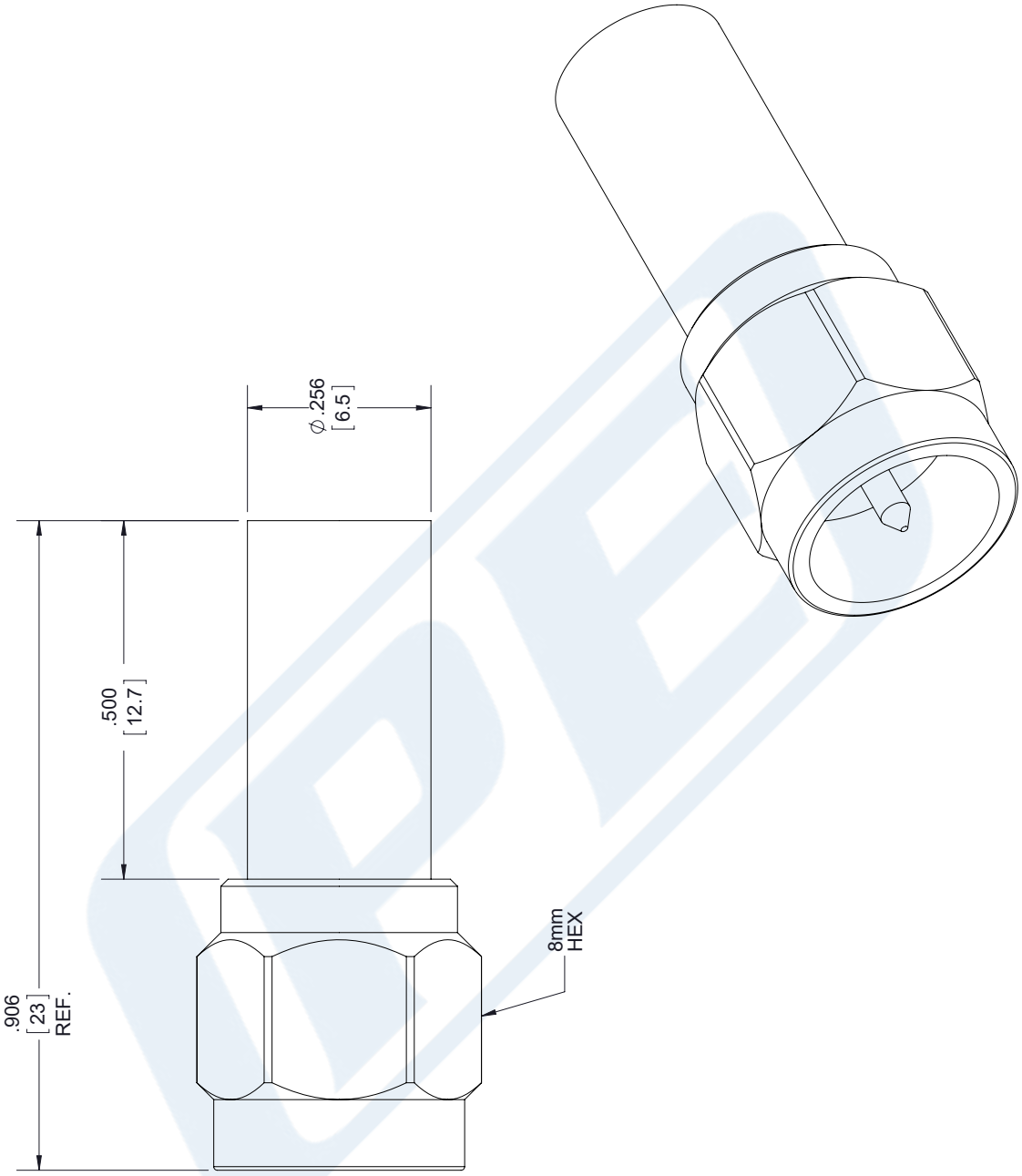

STANDARD TOLERANCES	
.X	±0.2
.XX	±0.01
.XXX	±0.005

*STANDARD TOLERANCES APPLY ONLY TO DIMENSIONS IN INCHES

NOTES:
1. UNLESS OTHERWISE SPECIFIED ALL DIMENSIONS ARE NOMINAL.
2. ALL SPECIFICATIONS ARE SUBJECT TO CHANGE WITHOUT NOTICE AT ANY TIME
3. DIMENSIONS ARE IN INCHES [mm].

DWG TITLE PE4008

CAD FILE 072617 | SCALE N/A | SIZE A | 2233

CAGE CODE 53919

PASTERNACK® THE ENGINEER'S RF SOURCE
Pasternack Enterprises, Inc.
P.O. Box 16759 | Irvine | CA | 92623
Phone: (949) 261-1920 | **Fax:** (949) 261-7451
Website: www.pasternack.com | **E-Mail:** sales@pasternack.com

© 2020 Pasternack Enterprises All Rights Reserved

PASTERNACK®
THE ENGINEER'S RF SOURCE

Flexible RG223 Coax Cable Double Shielded with Black PVC Jacket

TECHNICAL DATA SHEET RG223/U

Configuration

Inner Conductor Material and Plating	Copper, Silver
Dielectric Type	PE
Shield Materials	Silver Plated Copper Braid, Silver Plated Copper Braid
Jacket Material and Color	PVC, Black

Electrical Specifications

Impedance, Ohms	50
Velocity of Propagation, %	66
Maximum Operating Frequency, GHz	12.4
Capacitance, pF/ft [pF/m]	30.8 [101.05]
Maximum Operating Voltage, Volts	1,900

Electrical Specifications by Frequency

Frequency 1	
Frequency, MHz	100
Attenuation, dB/100ft [dB/100m]	4 [13.12]
Frequency 2	
Frequency, MHz	400
Attenuation, dB/100ft [dB/100m]	8.2 [26.9]
Frequency 3	
Frequency, MHz	1000
Attenuation, dB/100ft [dB/100m]	13.4 [43.96]
Frequency 4	
Frequency, GHz	3
Attenuation, dB/100ft [dB/100m]	24.8 [81.36]
Frequency 5	
Frequency, GHz	5
Attenuation, dB/100ft [dB/100m]	33.5 [109.91]
Frequency 6	
Frequency, GHz	11
Attenuation, dB/100ft [dB/100m]	54.1 [177.49]

Mechanical Specifications

Temperature	
Operating Range, deg C	-20 to +80

Click the following link (or enter part number in "SEARCH" on website) to obtain additional part information including price, inventory and certifications: Flexible RG223 Coax Cable Double Shielded with Black PVC Jacket RG223/U

Pasternack Enterprises, Inc. • P.O. Box 16759, Irvine, CA 92623
Phone: (866) 727-8376 or (949) 261-1920 • **Fax:** (949) 261-7451
Sales@Pasternack.com • Techsupport@Pasternack.com

© 2014 Pasternack Enterprises All Rights Reserved

Flexible RG223 Coax Cable Double Shielded with Black PVC Jacket

TECHNICAL DATA SHEET RG223/U

Inner Conductor	
Number of Strands	1
Material	Copper
Plating	Silver
Diameter, in [mm]	0.035 [0.89]
Dielectric:	
Type	PE
Diameter, in [mm]	0.116 [2.95]
Shield:	
Number of	2
Material 1	Silver Plated Copper Braid
Material 2	Silver Plated Copper Braid
Diameter, in [mm]	0.156 [3.96]
Jacket:	
Material	PVC
Diameter, in [mm]	0.21 [5.33]
Color	Black
One Time Minimum Bend Radius, in [mm]	0.21 [5.33]
Repeated Minimum Bend Radius, in [mm]	1 [25.4]
Weight, lbs/ft [Kg/m]	0.038 [0.06]

Compliance Certifications (visit www.Pasternack.com for current document)

RoHS Compliant	
REACH Compliant	06/18/2012

Plotted and Other Data

Notes:

- Values at +25 °C, sea level

Flexible RG223 Coax Cable Double Shielded with Black PVC Jacket from Pasternack Enterprises has same day shipment for domestic and International orders. Our RF, microwave and millimeter wave products maintain a 99% availability and are part of the broadest selection in the industry.

Click the following link (or enter part number in "SEARCH" on website) to obtain additional part information including price, inventory and certifications: Flexible RG223 Coax Cable Double Shielded with Black PVC Jacket RG223/U

URL: http://www.pasternack.com/flexible-0.216-rg223-50-ohm-coax-cable-pvc-jacket-rg223-u-p.aspx

The information contained in this document is accurate to the best of our knowledge and representative of the part described herein. It may be necessary to make modifications to the part and/or the documentation of the part, in order to implement improvements. Pasternack reserves the right to make such changes as required. Unless otherwise stated, all specifications are nominal. Pasternack does not make any representation or warranty regarding the suitability of the part described herein for any particular purpose, and Pasternack does not assume any liability arising out of the use of any part or documentation.

Pasternack Enterprises, Inc. • P.O. Box 16759, Irvine, CA 92623
Phone: (866) 727-8376 or (949) 261-1920 • **Fax:** (949) 261-7451
Sales@Pasternack.com • Techsupport@Pasternack.com

© 2014 Pasternack Enterprises All Rights Reserved

RG223/U CAD Drawing

Flexible RG223 Coax Cable Double Shielded with Black PVC Jacket

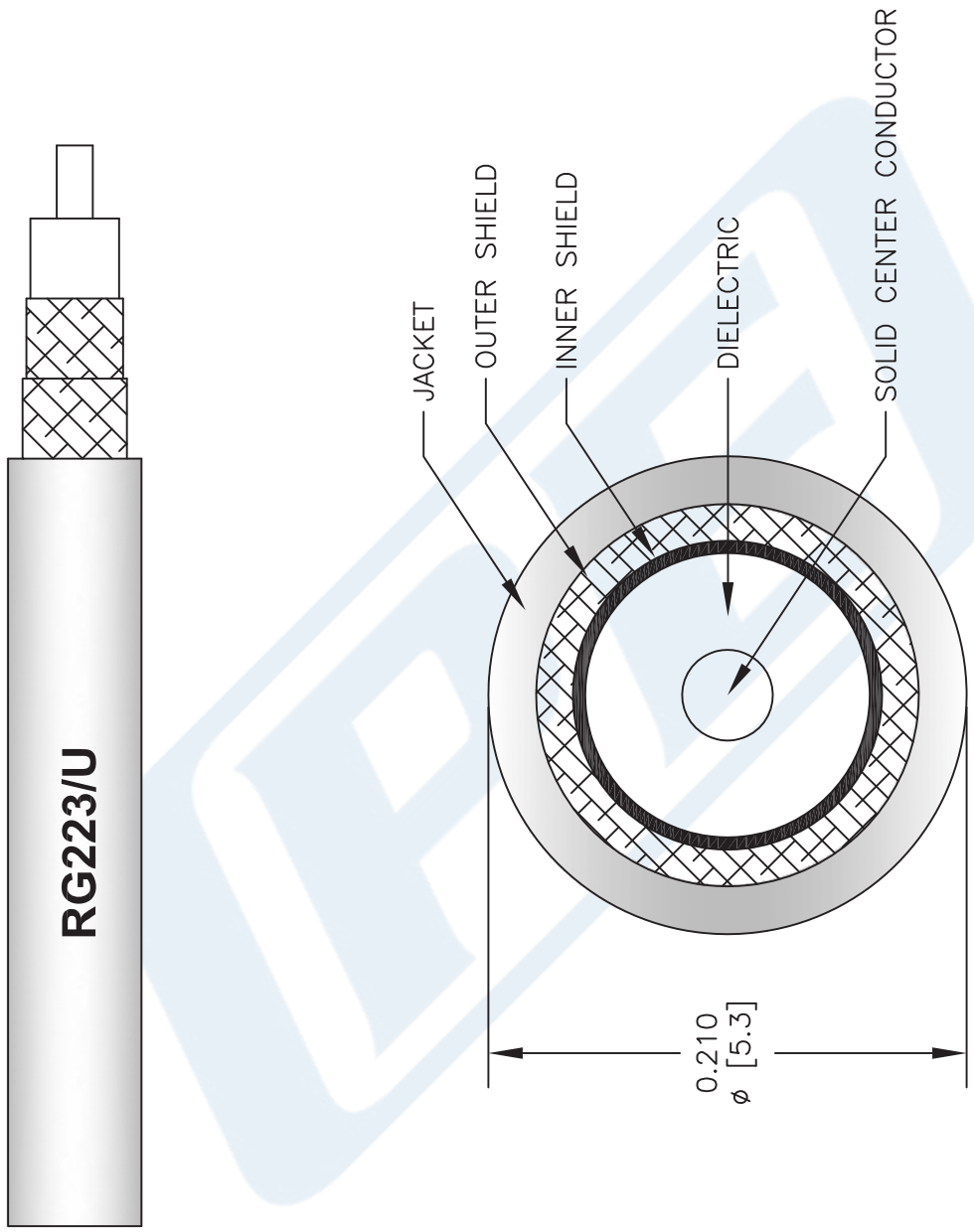

NOTES:
1. UNLESS OTHERWISE SPECIFIED ALL DIMENSIONS ARE NOMINAL.
2. ALL SPECIFICATIONS ARE SUBJECT TO CHANGE WITHOUT NOTICE AT ANY TIME.
3. DIMENSIONS ARE IN INCHES [mm].

DWG TITLE
RG223/U

FSCM NO. 53919

CAD FILE 060508-B | SCALE N/A | SIZE A | 2233

PASTERNACK®
Pasternack Enterprises, Inc.
P.O. Box 16759 | Irvine | CA | 92623
Phone: (949) 261-1920 | **Fax:** (949) 261-7451
Website: www.pasternack.com | **E-Mail:** sales@pasternack.com

© 2014 Pasternack Enterprises All Rights Reserved