PASTERNACK®
THE ENGINEER'S RF SOURCE

N Female Connector Crimp/Solder Attachment for RG214, RG9, RG225, RG393

Configuration

- N Female Connector
- MIL-STD-348A
- 50 Ohms
- Straight Body Geometry
- RG214, RG9, RG225, RG393 Interface Type
- Crimp/Solder Attachment

Features

- Max. Operating Frequency 11 GHz
- Good VSWR of 1.35:1
- Gold Plated Phosphor Bronze Contact
- 30 µin minimum contact plating

Applications

- General Purpose Test
- Custom Cable Assemblies

Description

Pasternack's PE4191 type N female connector with crimp/solder attachment for RG214, RG9, RG225 and RG393 is part of our full line of RF components available for same-day shipping. Our type N female connector operates up to a maximum frequency of 11 GHz and offers good VSWR of 1.35:1.

Our type N female connector PE4191 datasheet specifications and drawing with dimensions are shown below in this PDF. Pasternack's broad catalog of RF, microwave and millimeter wave connectors allows designers to configure and customize their signal connections however they like. Whether the need is to provide an I/O for a board design, or simply create a custom cable assembly configuration, Pasternack has the right connector for the job. Pasternack can also expertly build your custom cable assemblies for you and ship same-day.

Electrical Specifications

Description	Minimum	Typical	Maximum	Units
Frequency Range	DC		11	GHz
VSWR			1.35:1	
Operating Voltage (AC)			1,000	Vrms

Mechanical Specifications

Size

Length	1.68 in [42.67 mm]
Width/Dia.	0.667 in [16.94 mm]
Weight	0.084 lbs [38.1 g]

Click the following link (or enter part number in "SEARCH" on website) to obtain additional part information including price, inventory and certifications: N Female Connector Crimp/Solder Attachment for RG214, RG9, RG225, RG393 PE4191

Pasternack Enterprises, Inc. • P.O. Box 16759, Irvine, CA 92623
Phone: (866) 727-8376 or (949) 261-1920 • **Fax:** (949) 261-7451
Sales@Pasternack.com • Techsupport@Pasternack.com

© 2016 Pasternack Enterprises All Rights Reserved

N Female Connector Crimp/Solder Attachment for RG214, RG9, RG225, RG393

Material Specifications

Description	Material	Plating
Contact	Phosphor Bronze	Gold 30 µin minimum
Insulation	PTFE	
Body	Brass	Nickel 100 µin minimum

Environmental Specifications

Temperature

Operating Range -65 to +165 deg C

Compliance Certifications (see product page for current document)

Plotted and Other Data

Notes:

N Female Connector Crimp/Solder Attachment for RG214, RG9, RG225, RG393 from Pasternack Enterprises has same day shipment for domestic and International orders. Our RF, microwave and millimeter wave products maintain a 99% availability and are part of the broadest selection in the industry.

Click the following link (or enter part number in "SEARCH" on website) to obtain additional part information including price, inventory and certifications: N Female Connector Crimp/Solder Attachment for RG214, RG9, RG225, RG393 PE4191

URL: https://www.pasternack.com/n-female-standard-rg214-rg9-rg225-rg393-connector-pe4191-p.aspx

The information contained in this document is accurate to the best of our knowledge and representative of the part described herein. It may be necessary to make modifications to the part and/or the documentation of the part, in order to implement improvements. Pasternack reserves the right to make such changes as required. Unless otherwise stated, all specifications are nominal. Pasternack does not make any representation or warranty regarding the suitability of the part described herein for any particular purpose, and Pasternack does not assume any liability arising out of the use of any part or documentation.

Pasternack Enterprises, Inc. • P.O. Box 16759, Irvine, CA 92623
Phone: (866) 727-8376 or (949) 261-1920 • **Fax:** (949) 261-7451
Sales@Pasternack.com • Techsupport@Pasternack.com

© 2016 Pasternack Enterprises All Rights Reserved

PE4191 CAD Drawing

N Female Connector Crimp/Solder Attachment for RG214, RG9, RG225, RG393

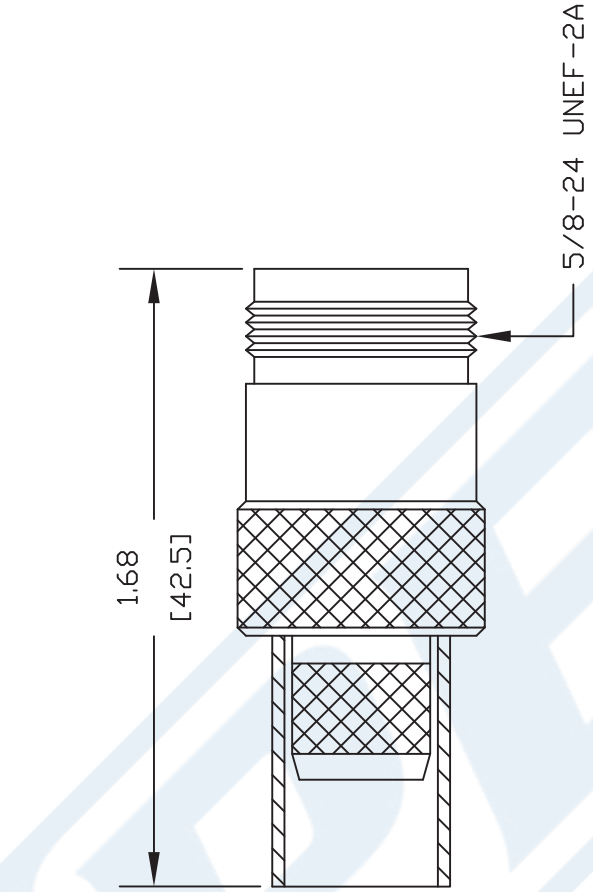

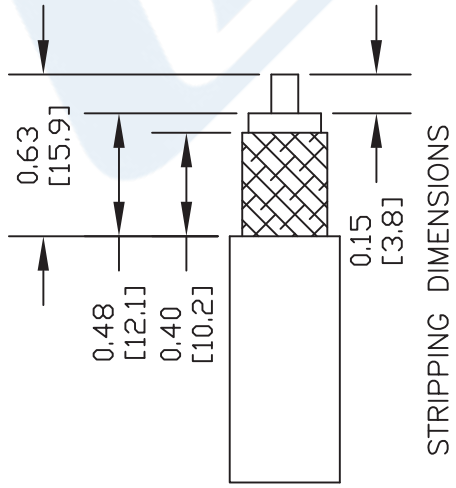

STRIPPING DIMENSIONS

CRIMP SIZE REQUIRED

CONTACT: SOLDER
FERRULE: .429" HEX CRIMP TOOL

NOTES:
1. UNLESS OTHERWISE SPECIFIED ALL DIMENSIONS ARE NOMINAL.
2. ALL SPECIFICATIONS ARE SUBJECT TO CHANGE WITHOUT NOTICE AT ANY TIME.
3. DIMENSIONS ARE IN INCHES [mm].
4. FITS MIL-C-17 AND EQUIVALENT CABLES.

DWG TITLE
PE4191

REV. -	FSCM NO. 53919	CAD FILE 030704	SCALE N/A	SIZE A	127

PASTERNACK®
Pasternack Enterprises, Inc.
P.O. Box 16759 | Irvine | CA | 92623
Phone: (949) 261-1920 | **Fax:** (949) 261-7451
Website: www.pasternack.com | **E-Mail:** sales@pasternack.com

© 2016 Pasternack Enterprises All Rights Reserved

PASTERNACK®
THE ENGINEER'S RF SOURCE

SC Male Right Angle Connector Clamp/Solder Attachment for RG213, RG214, RG8, RG9, RG225, RG393, RG215

Configuration

- SC Male Connector
- MIL-STD-348
- 50 Ohms
- Right Angle Body Geometry
- RG213, RG214, RG8, RG9, RG225, RG393, RG215 Interface Type
- Clamp/Solder Attachment

Features

- Max. Operating Frequency 11 GHz
- Silver Plated Brass Contact
- Contact plating according to QQ-S-365

Applications

- General Purpose Test
- Custom Cable Assemblies

Description

Pasternack's PE4979 SC male right angle connector with clamp/solder attachment for RG213, RG214, RG8, RG9, RG225, RG393 and RG215 is part of our full line of RF components available for same-day shipping. Our SC male connector operates up to a maximum frequency of 11 GHz. Its right angle body geometry allows for easier connections in tight spaces.

Our SC male right angle connector PE4979 datasheet specifications and drawing with dimensions are shown below in this PDF. Pasternack's broad catalog of RF, microwave and millimeter wave connectors allows designers to configure and customize their signal connections however they like. Whether the need is to provide an I/O for a board design, or simply create a custom cable assembly configuration, Pasternack has the right connector for the job. Pasternack can also expertly build your custom cable assemblies for you and ship same-day.

Electrical Specifications

Description	Minimum	Typical	Maximum	Units
Frequency Range	DC		11	GHz
Operating Voltage (AC)			1,000	Vrms
Dielectric Withstanding Voltage (AC)			3,000	Vrms
Insulation Resistance	5,000			MOhms

Mechanical Specifications

Size

Length	1.865 in [47.37 mm]
Width/Dia.	0.8 in [20.32 mm]
Height	1.495 in [37.97 mm]
Weight	0.199 lbs [90.26 g]

Click the following link (or enter part number in "SEARCH" on website) to obtain additional part information including price, inventory and certifications: SC Male Right Angle Connector Clamp/Solder Attachment for RG213, RG214, RG8, RG9, RG225, RG393, RG215 PE4979

Pasternack Enterprises, Inc. • P.O. Box 16759, Irvine, CA 92623
Phone: (866) 727-8376 or (949) 261-1920 • **Fax:** (949) 261-7451
Sales@Pasternack.com • Techsupport@Pasternack.com

© 2016 Pasternack Enterprises All Rights Reserved

SC Male Right Angle Connector Clamp/Solder Attachment for RG213, RG214, RG8, RG9, RG225, RG393, RG215

Material Specifications

Description	Material	Plating
Contact	Brass	Silver QQ-S-365
Insulation	PTFE	
Body	Brass	Nickel QQ-N-290
Coupling Nut	Brass	Nickel QQ-N-290

Environmental Specifications

Temperature

Operating Range -65 to +165 deg C

Compliance Certifications (see product page for current document)

Plotted and Other Data

Notes:

SC Male Right Angle Connector Clamp/Solder Attachment for RG213, RG214, RG8, RG9, RG225, RG393, RG215 from Pasternack Enterprises has same day shipment for domestic and International orders. Our RF, microwave and millimeter wave products maintain a 99% availability and are part of the broadest selection in the industry.

Click the following link (or enter part number in "SEARCH" on website) to obtain additional part information including price, inventory and certifications: SC Male Right Angle Connector Clamp/Solder Attachment for RG213, RG214, RG8, RG9, RG225, RG393, RG215 PE4979

URL: https://www.pasternack.com/sc-male-standard-rg213-rg214-rg8-rg9-rg225-rg393-connector-pe4979-p.aspx

The information contained in this document is accurate to the best of our knowledge and representative of the part described herein. It may be necessary to make modifications to the part and/or the documentation of the part, in order to implement improvements. Pasternack reserves the right to make such changes as required. Unless otherwise stated, all specifications are nominal. Pasternack does not make any representation or warranty regarding the suitability of the part described herein for any particular purpose, and Pasternack does not assume any liability arising out of the use of any part or documentation.

Pasternack Enterprises, Inc. • P.O. Box 16759, Irvine, CA 92623
Phone: (866) 727-8376 or (949) 261-1920 • **Fax:** (949) 261-7451
Sales@Pasternack.com • Techsupport@Pasternack.com

© 2016 Pasternack Enterprises All Rights Reserved

PE4979 CAD Drawing

SC Male Right Angle Connector Clamp/Solder Attachment for
RG213, RG214, RG8, RG9, RG225, RG393, RG215

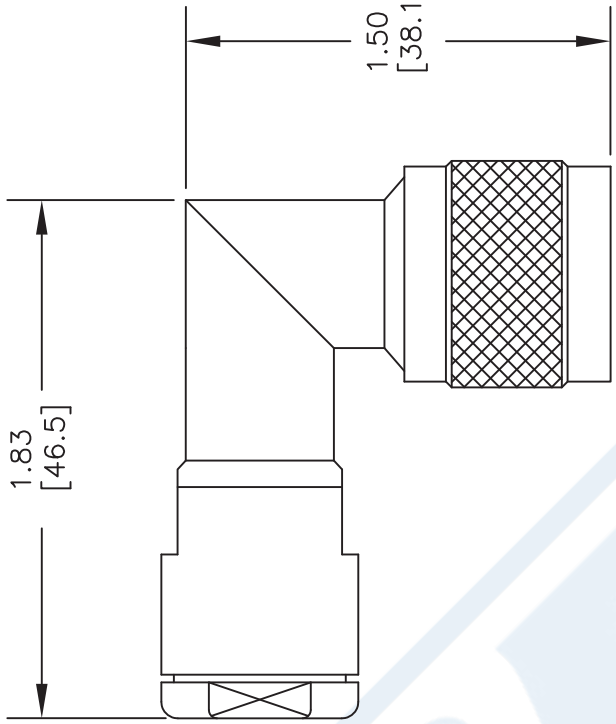

ASSEMBLY PROCEDURES

SLIDE CLAMP NUT (1) & GASKET (2) OVER CABLE. STRIP CABLE AS SHOWN. DO NOT NICK BRAID WHILE CUTTING JACKET. TAPER END OF BRAID TO PERMIT ASSEMBLY OF BRAID CLAMP (3) SLIDE BRAID CLAMP(3) OVER BRAID & SEAT AGAINST CABLE.

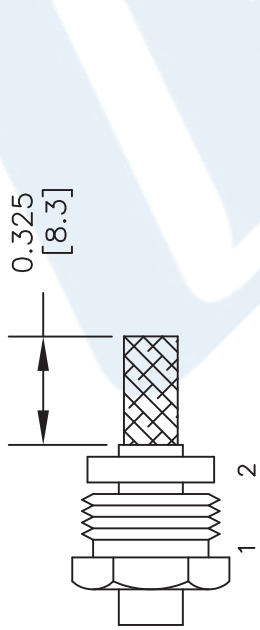

FORM BRAID OVER CLAMP NUT (3). TRIM BRAID BACK TO SHOULDER. CUT DIELECTRIC TO DIMENSION SHOWN. DO NOT NICK CENTER CONDUCTOR. SOLDER CONTACT TO CENTER CONDUCTOR. REMOVE EXCESS SOLDER. DO NOT OVER HEAT DIELECTRIC. INSERT CABLE ASSEMBLY INTO BODY & TIGHTEN.

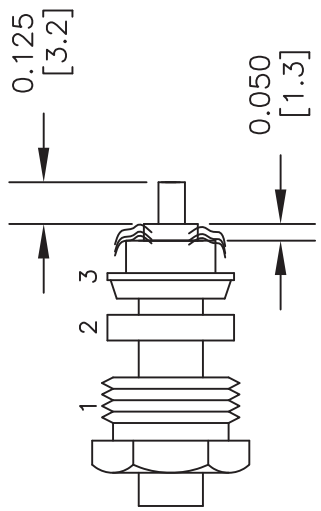

NOTES:
1. UNLESS OTHERWISE SPECIFIED ALL DIMENSIONS ARE NOMINAL.
2. ALL SPECIFICATIONS ARE SUBJECT TO CHANGE WITHOUT NOTICE AT ANY TIME.
3. DIMENSIONS ARE IN INCHES [mm].
4. FITS MIL-C-17 AND EQUIVALENT CABLES.

DWG TITLE PE4979	CAD FILE 012314	SCALE N/A	SIZE A	2233
FSCM NO. 53919			

PASTERNACK®
Pasternack Enterprises, Inc.
P.O. Box 16759 | Irvine | CA | 92623
Phone: (949) 261-1920 | **Fax:** (949) 261-7451
Website: www.pasternack.com | **E-Mail:** sales@pasternack.com

© 2016 Pasternack Enterprises All Rights Reserved

PASTERNACK®
THE ENGINEER'S RF SOURCE

Flexible RG393 Coax Cable Double Shielded with Tan FEP Jacket

RF Cables
Technical Data Sheet

RG393/U

Configuration

- Flexible Cable
- 2 Shield(s)

Features

- 50 Ohm Impedance
- Stranded Silver Plated Copper center conductor
- PTFE dielectric
- Double Silver Plated Copper Braid
- FEP Jacket Material 0.390 in diameter

Electrical Specifications

Description	Minimum	Typical	Maximum	Units
Frequency Range	DC		10	GHz
Impedance		50		Ohms
Velocity of Propagation		69.5		%
Nominal Capacitance		29.4 [96.46]		pF/ft [pF/m]

Performance by Frequency Band

Description	F1	F2	F3	F4	F5	Units
Frequency	0.01	0.1	1	5	10	GHz
Attenuation, Typ	0.6	2.1	7.5	21	35	dB/100ft
	1.97	6.89	24.61	68.9	114.83	dB/100m
Input Power (CW), Max	25,000	6,300	1,700	620	350	Watts

Mechanical Specifications

Diameter	0.39 in [9.91 mm]
Weight	0.157 lbs/ft [0.23 Kg/m]
Min. Bend Radius (Repeated)	3.9 in [99.06 mm]

Construction Specifications

Description	Material and Plating	Diameter
Inner Conductor	Copper, Silver7	0.094 in 2.39 mm
Conductor Type	Stranded	

Click the following link (or enter part number in "SEARCH" on website) to obtain additional part information including price, inventory and certifications: Flexible RG393 Coax Cable Double Shielded with Tan FEP Jacket RG393/U

Pasternack Enterprises, Inc. • P.O. Box 16759, Irvine, CA 92623
Phone: (866) 727-8376 or (949) 261-1920 • **Fax:** (949) 261-7451
Sales@Pasternack.com • Techsupport@Pasternack.com

© 2018 Pasternack Enterprises All Rights Reserved

Flexible RG393 Coax Cable Double Shielded with Tan FEP Jacket

Dielectric	PTFE	0.285 in 7.24 mm
First Shield	Silver Plated Copper Braid 90% coverage	0.313 in 7.95 mm
Second Shield	Silver Plated Copper Braid 90% coverage	0.341 in 8.66 mm
Jacket	FEP, Tan	0.39 in [9.91 mm]

Environmental Specifications

Temperature

Operating Range -55 to +200 deg C

Compliance Certifications (see product page for current document)

Plotted and Other Data

Notes:

Flexible RG393 Coax Cable Double Shielded with Tan FEP Jacket from Pasternack Enterprises has same day shipment for domestic and International orders. Our RF, microwave and millimeter wave products maintain a 99.4% availability and are part of the broadest selection in the industry.

Click the following link (or enter part number in "SEARCH" on website) to obtain additional part information including price, inventory and certifications: Flexible RG393 Coax Cable Double Shielded with Tan FEP Jacket RG393/U

URL: https://www.pasternack.com/flexible-rg393u-fep-jacket-silver-plated-copper-braid-over-silver-plated-copper-braid-outer-conductor-double-shielded-rg393-u-p.aspx

The information contained in this document is accurate to the best of our knowledge and representative of the part described herein. It may be necessary to make modifications to the part and/or the documentation of the part, in order to implement improvements. Pasternack reserves the right to make such changes as required. Unless otherwise stated, all specifications are nominal. Pasternack does not make any representation or warranty regarding the suitability of the part described herein for any particular purpose, and Pasternack does not assume any liability arising out of the use of any part or documentation.

Pasternack Enterprises, Inc. • P.O. Box 16759, Irvine, CA 92623
Phone: (866) 727-8376 or (949) 261-1920 • **Fax:** (949) 261-7451
Sales@Pasternack.com • Techsupport@Pasternack.com

© 2018 Pasternack Enterprises All Rights Reserved

RG393/U CAD Drawing

Flexible RG393 Coax Cable Double Shielded with Tan FEP Jacket

REVISIONS

REV.	DESCRIPTION	DATE	APPROVED
A	PCR RG393/U	1/8/2020	S.ELLIS

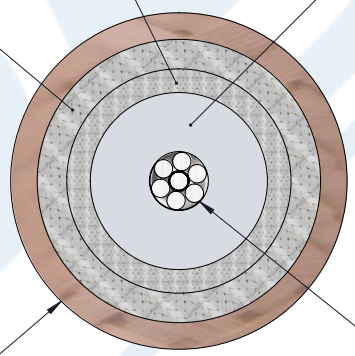

SECTION VIEW

UNLESS OTHERWISE SPECIFIED
LEADING DIMENSIONS ARE INCHES
DIMENSIONS IN [ ] ARE MILLIMETERS

TOLERANCES:

.X = ± .2 [5.08] | FRACTIONS
.XX = ± .02 [.51] | ± 1/32
.XXX = ± .005 [.13] | ANGLES ± 1°

CABLE LENGTH (L) TOLERANCES:

L ≤ 12 [305] = +1 [25] / -0
12 [305] < L ≤ 60 [1524] = +2 [51] / -0
60 [1524] < L ≤ 120 [3048] = +4 [102] / -0
120 [3048] < L ≤ 300 [7620] = +6 [152] / -0
300 [7620] < L = +5%L / -0

ALL DIMENSIONS SHOWN
ARE FOR REFERENCE ONLY.

PASTERNACK®
an INFINITE brand

Pasternack Enterprises, Inc.
P.O.Box 16759, Irvine, CA 92623
Phone: 1.949.261.1920 | 1.866.727.8376
Fax: 1.949.261.7451
Website: www.pasternack.com
E-mail: sales@pasternack.com

THIRD-ANGLE PROJECTION

THE INFORMATION AND DESIGN IN THIS DOCUMENT IS THE PROPERTY OF PASTERNACK CORPORATION ALL RIGHTS RESERVED.

SIZE	CAGE CODE	DRAWN BY	ITEM NO.	REV
A	53919	K.DANG	RG393/U	A

SHEET 1 OF 1
SCALE N/A

THESE COMMODITIES, TECHNOLOGY OR SOFTWARE WERE EXPORTED FROM THE UNITED STATES IN ACCORDANCE WITH THE EXPORT ADMINISTRATION REGULATIONS. DIVERSION CONTRARY TO U.S. LAW PROHIBITED.

T-Rev.D

© 2018 Pasternack Enterprises All Rights Reserved