PASTERNACK®
THE ENGINEER'S RF SOURCE

QMA Male Connector Crimp/Solder Attachment for PE-C195, PE-P195, RG58, RG141, RG303, LMR-195, 0.195 inch

Configuration

- QMA Male Connector
- 50 Ohms
- Straight Body Geometry
- PE-C195, PE-P195, RG58, RG141, RG303, LMR-195, 0.195 inch Interface Type
- Crimp/Solder Attachment

Features

- Max. Operating Frequency 6 GHz
- Excellent VSWR of 1.15:1
- Gold Plated Brass Contact

Applications

- General Purpose Test
- Custom Cable Assemblies

Description

Pasternack's PE44503 QMA male connector with crimp/solder attachment for PE-C195, PE-P195, RG58, RG141, RG303, LMR-195 and 0.195 inch is part of our full line of RF components available for same-day shipping. Our QMA male connector operates up to a maximum frequency of 6 GHz and offers excellent VSWR of 1.15:1.

Our QMA male connector PE44503 datasheet specifications and drawing with dimensions are shown below in this PDF. Pasternack's broad catalog of RF, microwave and millimeter wave connectors allows designers to configure and customize their signal connections however they like. Whether the need is to provide an I/O for a board design, or simply create a custom cable assembly configuration, Pasternack has the right connector for the job. Pasternack can also expertly build your custom cable assemblies for you and ship same-day.

Electrical Specifications

Description	Minimum	Typical	Maximum	Units
Frequency Range	DC		6	GHz
VSWR			1.15:1	
Operating Voltage (AC)			333	Vrms
Dielectric Withstanding Voltage (AC)			1,000	Vrms

Mechanical Specifications

Size	
Length	0.932 in [23.67 mm]
Width/Dia.	0.41 in [10.41 mm]
Weight	0.015 lbs [6.8 g]
Mating Cycles	500 Cycles

Click the following link (or enter part number in "SEARCH" on website) to obtain additional part information including price, inventory and certifications: QMA Male Connector Crimp/Solder Attachment for PE-C195, PE-P195, RG58, RG141, RG303, LMR-195, 0.195 inch PE44503

Pasternack Enterprises, Inc. • P.O. Box 16759, Irvine, CA 92623
Phone: (866) 727-8376 or (949) 261-1920 • **Fax:** (949) 261-7451
Sales@Pasternack.com • Techsupport@Pasternack.com

© 2016 Pasternack Enterprises All Rights Reserved

QMA Male Connector Crimp/Solder Attachment for PE-C195, PE-P195, RG58, RG141, RG303, LMR-195, 0.195 inch

Material Specifications

Description	Material	Plating
Contact	Brass	Gold
Insulation	PTFE	
Outer Conductor	Phosphor Bronze	Tri-Metal
Body	Brass	Tri-Metal

Environmental Specifications

Temperature

Operating Range -65 to +165 deg C

Compliance Certifications (see product page for current document)

Plotted and Other Data

Notes:

QMA Male Connector Crimp/Solder Attachment for PE-C195, PE-P195, RG58, RG141, RG303, LMR-195, 0.195 inch from Pasternack Enterprises has same day shipment for domestic and International orders. Our RF, microwave and millimeter wave products maintain a 99% availability and are part of the broadest selection in the industry.

Click the following link (or enter part number in "SEARCH" on website) to obtain additional part information including price, inventory and certifications: QMA Male Connector Crimp/Solder Attachment for PE-C195, PE-P195, RG58, RG141, RG303, LMR-195, 0.195 inch PE44503

URL: https://www.pasternack.com/qma-male-standard-rg58-rg141-connector-pe44503-p.aspx

The information contained in this document is accurate to the best of our knowledge and representative of the part described herein. It may be necessary to make modifications to the part and/or the documentation of the part, in order to implement improvements. Pasternack reserves the right to make such changes as required. Unless otherwise stated, all specifications are nominal. Pasternack does not make any representation or warranty regarding the suitability of the part described herein for any particular purpose, and Pasternack does not assume any liability arising out of the use of any part or documentation.

Pasternack Enterprises, Inc. • P.O. Box 16759, Irvine, CA 92623
Phone: (866) 727-8376 or (949) 261-1920 • **Fax:** (949) 261-7451
Sales@Pasternack.com • Techsupport@Pasternack.com

© 2016 Pasternack Enterprises All Rights Reserved

PE44503 CAD Drawing

QMA Male Connector Crimp/Solder Attachment for PE-C195, PE-P195, RG58, RG141, RG303, LMR-195, 0.195 inch

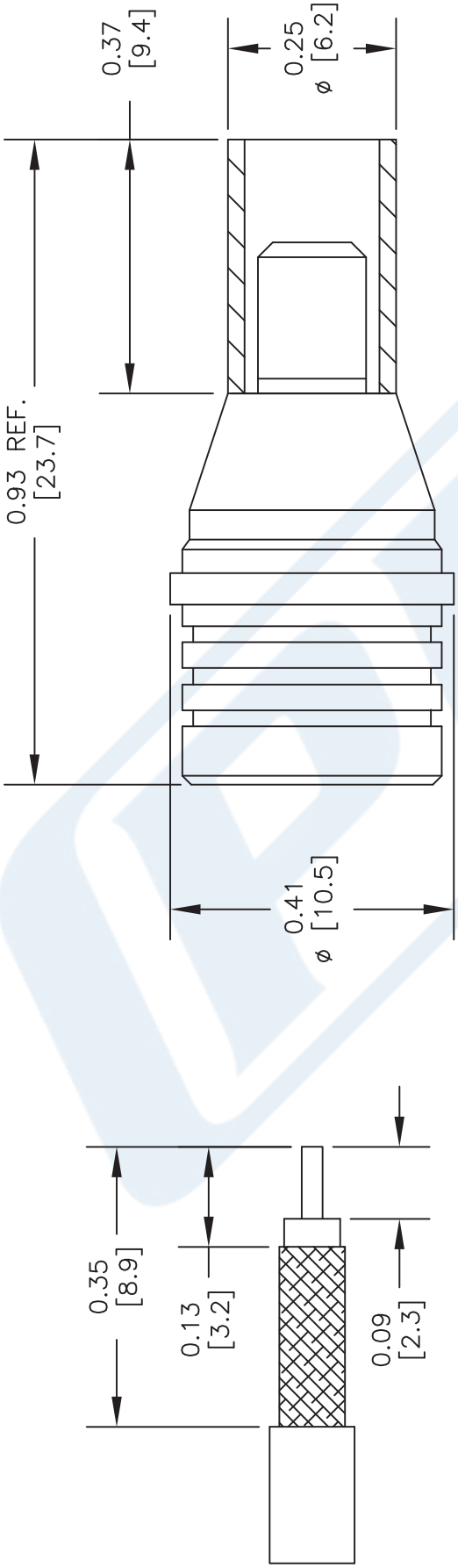

STRIPPING DIMENSIONS

CRIMP SIZE REQUIRED

CONTACT: SOLDER
FERRULE: .213" HEX CRIMP TOOL

NOTES:
1. UNLESS OTHERWISE SPECIFIED ALL DIMENSIONS ARE NOMINAL.
2. ALL SPECIFICATIONS ARE SUBJECT TO CHANGE WITHOUT NOTICE AT ANY TIME.
3. DIMENSIONS ARE IN INCHES [mm].
4. FITS MIL-C-17 AND EQUIVALENT CABLES.

DWG TITLE
PE44503

REV. G	FSCM NO. 53919	CAD FILE 032312	SCALE N/A	SIZE A	2233

PASTERNACK®
THE ENGINEER'S RF SOURCE
Pasternack Enterprises, Inc.
P.O. Box 16759 | Irvine | CA | 92623
Phone: (949) 261-1920 | **Fax:** (949) 261-7451
Website: www.pasternack.com | **E-Mail:** sales@pasternack.com

© 2016 Pasternack Enterprises All Rights Reserved

PASTERNACK®
THE ENGINEER'S RF SOURCE

QN Male Connector Crimp/Solder Attachment for RG58, RG303, RG141, PE-C195, PE-P195, LMR-195

Configuration

- QN Male Connector
- 50 Ohms
- Straight Body Geometry
- RG58, RG303, RG141, PE-C195, PE-P195, LMR-195 Interface Type
- Crimp/Solder Attachment

Features

- Max. Operating Frequency 6 GHz
- Excellent VSWR of 1.2:1
- Silver Plated Brass Contact

Applications

- General Purpose Test
- Custom Cable Assemblies

Description

Pasternack's PE45071 QN male connector with crimp/solder attachment for RG58, RG303, RG141, PE-C195, PE-P195 and LMR-195 is part of our full line of RF components available for same-day shipping. Our QN male connector operates up to a maximum frequency of 6 GHz and offers excellent VSWR of 1.2:1.

Our QN male connector PE45071 datasheet specifications and drawing with dimensions are shown below in this PDF. Pasternack's broad catalog of RF, microwave and millimeter wave connectors allows designers to configure and customize their signal connections however they like. Whether the need is to provide an I/O for a board design, or simply create a custom cable assembly configuration, Pasternack has the right connector for the job. Pasternack can also expertly build your custom cable assemblies for you and ship same-day.

Electrical Specifications

Description	Minimum	Typical	Maximum	Units
Frequency Range	DC		6	GHz
VSWR			1.2:1	
Insertion Loss			0.12	dB
Operating Voltage (AC)			850	Vrms
Dielectric Withstanding Voltage (AC)			1,500	Vrms
Insulation Resistance	5,000			MOhms

Mechanical Specifications

Size	
Length	1.39 in [35.31 mm]
Width/Dia.	0.75 in [19.05 mm]
Weight	0.04 lbs [18.14 g]
Mating Cycles	100 Cycles

Click the following link (or enter part number in "SEARCH" on website) to obtain additional part information including price, inventory and certifications: QN Male Connector Crimp/Solder Attachment for RG58, RG303, RG141, PE-C195, PE-P195, LMR-195 PE45071

Pasternack Enterprises, Inc. • P.O. Box 16759, Irvine, CA 92623
Phone: (866) 727-8376 or (949) 261-1920 • **Fax:** (949) 261-7451
Sales@Pasternack.com • Techsupport@Pasternack.com

© 2017 Pasternack Enterprises All Rights Reserved

QN Male Connector Crimp/Solder Attachment for RG58, RG303, RG141, PE-C195, PE-P195, LMR-195

Material Specifications

Description	Material	Plating
Contact	Brass	Silver
Insulation	PTFE	
Outer Conductor	Beryllium Copper	
Body	Brass	Silver
Coupling Nut	Brass	Silver

Environmental Specifications

Temperature

Operating Range -55 to +125 deg C

Compliance Certifications (see product page for current document)

Plotted and Other Data

Notes:

Click the following link (or enter part number in "SEARCH" on website) to obtain additional part information including price, inventory and certifications: QN Male Connector Crimp/Solder Attachment for RG58, RG303, RG141, PE-C195, PE-P195, LMR-195 PE45071

Pasternack Enterprises, Inc. • P.O. Box 16759, Irvine, CA 92623
Phone: (866) 727-8376 or (949) 261-1920 • **Fax:** (949) 261-7451
Sales@Pasternack.com • Techsupport@Pasternack.com

© 2017 Pasternack Enterprises All Rights Reserved

QN Male Connector Crimp/Solder Attachment for RG58, RG303, RG141, PE-C195, PE-P195, LMR-195

Assembly Instruction

ASSEMBLY PROCEDURES

1. STRIP CABLE AS SHOWN. SLIDE FERRULE OVER CABLE.

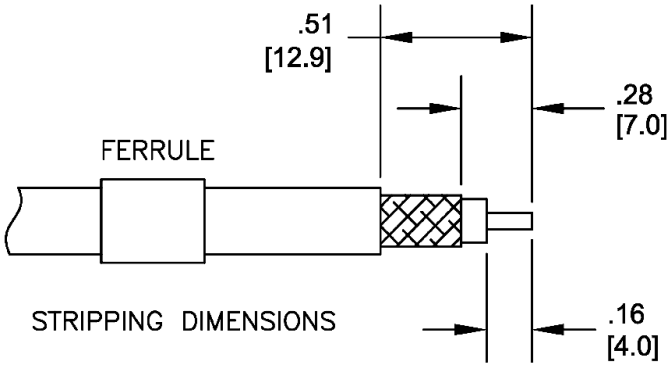

2. INSERT DIELECTRIC INTO CONTACT AND CRIMP IT WITH .100" HEX CRIMP TOOL. SPLAY OUT THE BRAID.

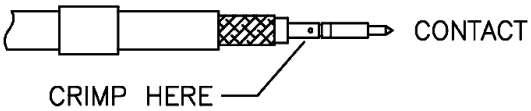

3. INSERT STRIPPED CABLE INTO BODY UNTIL CONTACT ENGAGES PERCEPTIBLY.

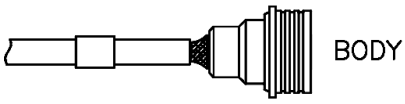

4. SLIDE FERRULE OVER BRAID UP TO THE CONNECTOR BODY AND CRIMP AS CLOSE TO THE CONNECTOR BODY AS POSSIBLE USING A .213" HEX CRIMP TOOL.

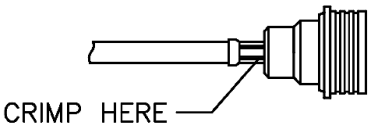

Click the following link (or enter part number in "SEARCH" on website) to obtain additional part information including price, inventory and certifications: QN Male Connector Crimp/Solder Attachment for RG58, RG303, RG141, PE-C195, PE-P195, LMR-195 PE45071

Pasternack Enterprises, Inc. • P.O. Box 16759, Irvine, CA 92623
Phone: (866) 727-8376 or (949) 261-1920 • **Fax:** (949) 261-7451
Sales@Pasternack.com • Techsupport@Pasternack.com

© 2017 Pasternack Enterprises All Rights Reserved

QN Male Connector Crimp/Solder Attachment for RG58, RG303, RG141, PE-C195, PE-P195, LMR-195

RF Connectors Technical Data Sheet PE45071

QN Male Connector Crimp/Solder Attachment for RG58, RG303, RG141, PE-C195, PE-P195, LMR-195 from Pasternack Enterprises has same day shipment for domestic and International orders. Our RF, microwave and millimeter wave products maintain a 99.4% availability and are part of the broadest selection in the industry.

Click the following link (or enter part number in “SEARCH” on website) to obtain additional part information including price, inventory and certifications: QN Male Connector Crimp/Solder Attachment for RG58, RG303, RG141, PE-C195, PE-P195, LMR-195 PE45071

URL: https://www.pasternack.com/qn-male-rg58-rg303-pe-c195-pe-p195-lmr-195-connector-pe45071-p.aspx

The information contained in this document is accurate to the best of our knowledge and representative of the part described herein. It may be necessary to make modifications to the part and/or the documentation of the part, in order to implement improvements. Pasternack reserves the right to make such changes as required. Unless otherwise stated, all specifications are nominal. Pasternack does not make any representation or warranty regarding the suitability of the part described herein for any particular purpose, and Pasternack does not assume any liability arising out of the use of any part or documentation.

Pasternack Enterprises, Inc. • P.O. Box 16759, Irvine, CA 92623
Phone: (866) 727-8376 or (949) 261-1920 • **Fax:** (949) 261-7451
Sales@Pasternack.com • Techsupport@Pasternack.com

© 2017 Pasternack Enterprises All Rights Reserved

PE45071 CAD Drawing

QN Male Connector Crimp/Solder Attachment for RG58, RG303, RG141, PE-C195, PE-P195, LMR-195

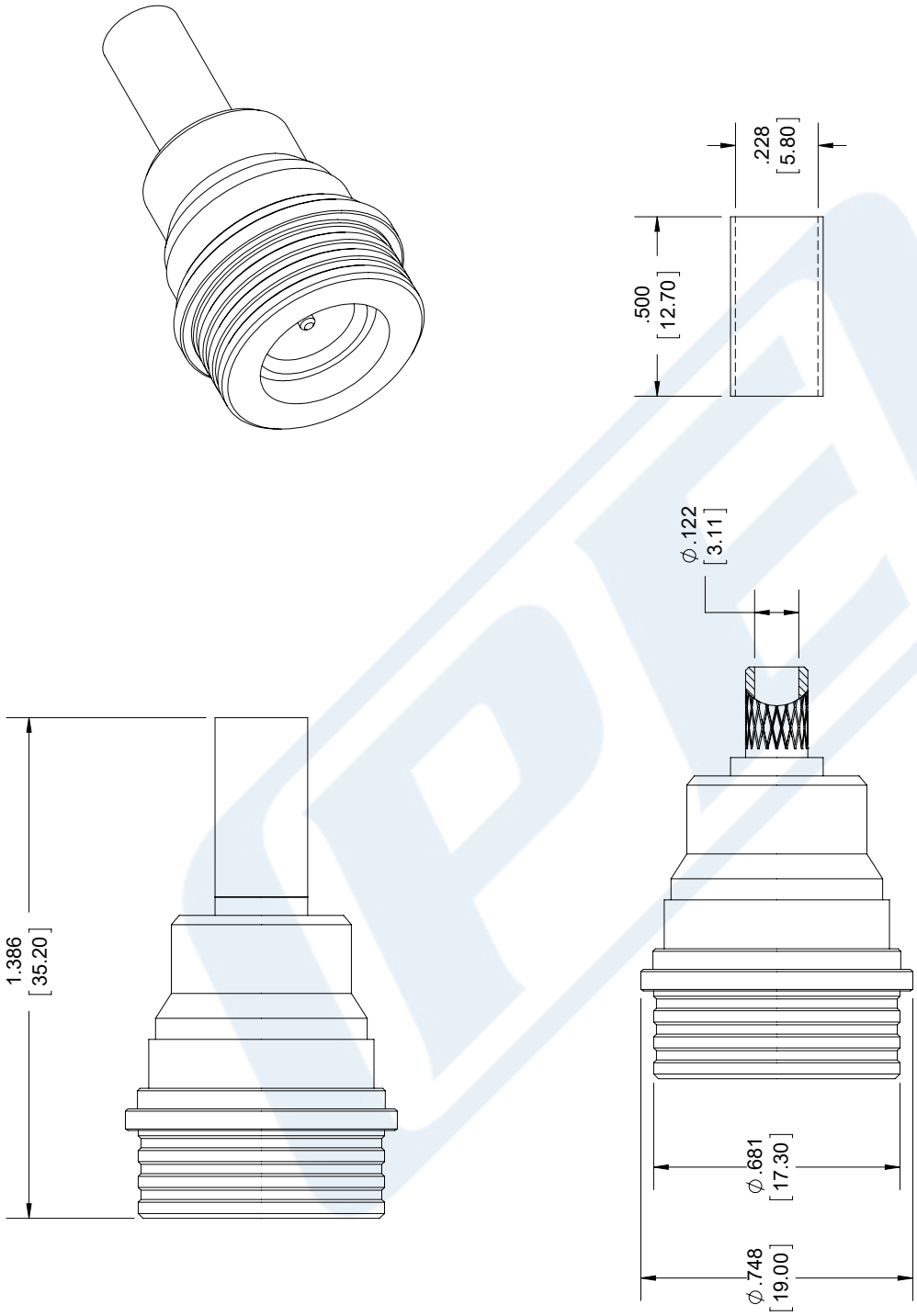

STANDARD TOLERANCES	
.X	±0.2
.XX	±0.01
.XXX	±0.005

*STANDARD TOLERANCES APPLY ONLY TO DIMENSIONS IN INCHES

NOTES:
1. UNLESS OTHERWISE SPECIFIED ALL DIMENSIONS ARE NOMINAL.
2. ALL SPECIFICATIONS ARE SUBJECT TO CHANGE WITHOUT NOTICE AT ANY TIME
3. DIMENSIONS ARE IN INCHES [mm].

DWG TITLE PE45071

CAD FILE 100617 | SCALE N/A | SIZE A | 7361

CAGE CODE 53919

PASTERNACK® THE ENGINEER'S RF SOURCE
Pasternack Enterprises, Inc.
P.O. Box 16759 | Irvine | CA | 92623
Phone: (949) 261-1920 | **Fax:** (949) 261-7451
Website: www.pasternack.com | **E-Mail:** sales@pasternack.com

© 2017 Pasternack Enterprises All Rights Reserved

PASTERNACK®
THE ENGINEER'S RF SOURCE

Low Loss Flexible RG58 Type Coax Cable Double Shielded with Black PE Jacket

RF Cables Technical Data Sheet PE-C195

Configuration

- Low Loss Flexible Cable
- 2 Shield(s)

Features

- Low Loss
- Double Shielded
- PE Jacket
- Velocity of Propagation 80%
- Shielding Effectiveness > 90 dB

Applications

- Antenna Feeds
- Communication Systems
- Wireless Systems
- Indoor / Outdoor Uses
- Direct Burial
- Jumper Cable Assemblies

Description

Flexible coaxial cable are ideal for applications where tight bends and continual flexure are required. Pasternack's PE-C195 is a low loss flexible RG58 type coax cable with PE jacket. The double shielding of this low loss cable provides better electrical performance than the standard RG-58 cable including excellent shielding effectiveness of better than 90 dB. This Pasternack cable's PE jacket makes it suitable for indoor/outdoor uses and direct burial applications. PE-C195 RG58 type datasheet specifications and outline drawing for this flexible cable are shown in the PDF below.

Pasternack carries a wide range of cables ready to ship same day to fit your needs. They are available in corrugated, flexible, formable or semi-rigid versions with different constructions of conductor materials, dielectric materials, shielding configurations and jacket materials. Our cables are designed to fit a wide range of performance criteria including attenuation, operating temperature, environmental factor, and power capability.

Electrical Specifications

Description	Minimum	Typical	Maximum	Units
Frequency Range	DC		5.8	GHz
Cutoff Frequency		41		GHz
Impedance		50		Ohms
Velocity of Propagation		80		%
Shielding Effectiveness	90			dB
Jacket Spark			5,000	Vrms
Nominal Capacitance		25.4 [83.33]		pF/ft [pF/m]
Input Power (Peak)			2.5	KWatts

Click the following link (or enter part number in "SEARCH" on website) to obtain additional part information including price, inventory and certifications: Low Loss Flexible RG58 Type Coax Cable Double Shielded with Black PE Jacket PE-C195

Pasternack Enterprises, Inc. • P.O. Box 16759, Irvine, CA 92623
Phone: (866) 727-8376 or (949) 261-1920 • **Fax:** (949) 261-7451
Sales@Pasternack.com • Techsupport@Pasternack.com

© 2017 Pasternack Enterprises All Rights Reserved

Low Loss Flexible RG58 Type Coax Cable Double Shielded with Black PE Jacket

Performance by Frequency Band

Description	F1	F2	F3	F4	F5	Units
Frequency	0.15	0.22	0.45	0.9	1.5	GHz
Attenuation, Max	4.4	5.4	7.8	11.1	14.5	dB/100ft
	14.44	17.72	25.59	36.42	47.57	dB/100m
Attenuation, Typ	4.3	5.2	7.5	10.7	13.4	dB/100ft
	14.11	17.06	24.61	35.1	43.96	dB/100m
Input Power (CW), Max	350	290	200	140	110	Watts

Description	F6	F7	F8	F9	F10	Units
Frequency	1.8	2	2.5	5.8		GHz
Attenuation, Max	16	16.9	19	29.9		dB/100ft
	52.49	55.45	62.34	98.1		dB/100m
Attenuation, Typ	15.3	16.1	18.1	28.2		dB/100ft
	50.2	52.82	59.38	92.52		dB/100m
Input Power (CW), Max	100	90	80	50		Watts

Mechanical Specifications

Diameter	0.195 in [4.95 mm]
Weight	0.021 lbs/ft [0.03 Kg/m]
Min. Bend Radius (Installation)	0.5 in [12.7 mm]
Min. Bend Radius (Repeated)	2 in [50.8 mm]

Construction Specifications

Description	Material and Plating	Diameter
Inner Conductor	Copper, 1 Strands	0.037 in [0.94 mm]
Conductor Type	Solid	
Dielectric	PE (F)	0.11 in [2.79 mm]
First Shield	Aluminum Tape	

Click the following link (or enter part number in "SEARCH" on website) to obtain additional part information including price, inventory and certifications: Low Loss Flexible RG58 Type Coax Cable Double Shielded with Black PE Jacket PE-C195

Pasternack Enterprises, Inc. • P.O. Box 16759, Irvine, CA 92623
Phone: (866) 727-8376 or (949) 261-1920 • **Fax:** (949) 261-7451
Sales@Pasternack.com • Techsupport@Pasternack.com

© 2017 Pasternack Enterprises All Rights Reserved

Low Loss Flexible RG58 Type Coax Cable
Double Shielded with Black PE Jacket

Second Shield	Tinned Copper Braid	0.139 in [3.53 mm]
Jacket	PE, Black	0.195 in [4.95 mm]

Environmental Specifications

Temperature

Operating Range	-40 to +85 deg C
Installation Range	-70 to +85 deg C
Storage Range	-40 to +85 deg C

Compliance Certifications (see product page for current document)

Plotted and Other Data

Notes:

Low Loss Flexible RG58 Type Coax Cable Double Shielded with Black PE Jacket from Pasternack Enterprises has same day shipment for domestic and International orders. Our RF, microwave and millimeter wave products maintain a 99.4% availability and are part of the broadest selection in the industry.

Click the following link (or enter part number in "SEARCH" on website) to obtain additional part information including price, inventory and certifications: Low Loss Flexible RG58 Type Coax Cable Double Shielded with Black PE Jacket PE-C195

URL: https://www.pasternack.com/flexible-0.195-50-ohm-coax-cable-pe-jacket-pe-c195-p.aspx

The information contained in this document is accurate to the best of our knowledge and representative of the part described herein. It may be necessary to make modifications to the part and/or the documentation of the part, in order to implement improvements. Pasternack reserves the right to make such changes as required. Unless otherwise stated, all specifications are nominal. Pasternack does not make any representation or warranty regarding the suitability of the part described herein for any particular purpose, and Pasternack does not assume any liability arising out of the use of any part or documentation.

Pasternack Enterprises, Inc. • P.O. Box 16759, Irvine, CA 92623
Phone: (866) 727-8376 or (949) 261-1920 • **Fax:** (949) 261-7451
Sales@Pasternack.com • Techsupport@Pasternack.com

© 2017 Pasternack Enterprises All Rights Reserved

PE-C195 CAD Drawing

Low Loss Flexible RG58 Type Coax Cable Double Shielded with Black PE Jacket

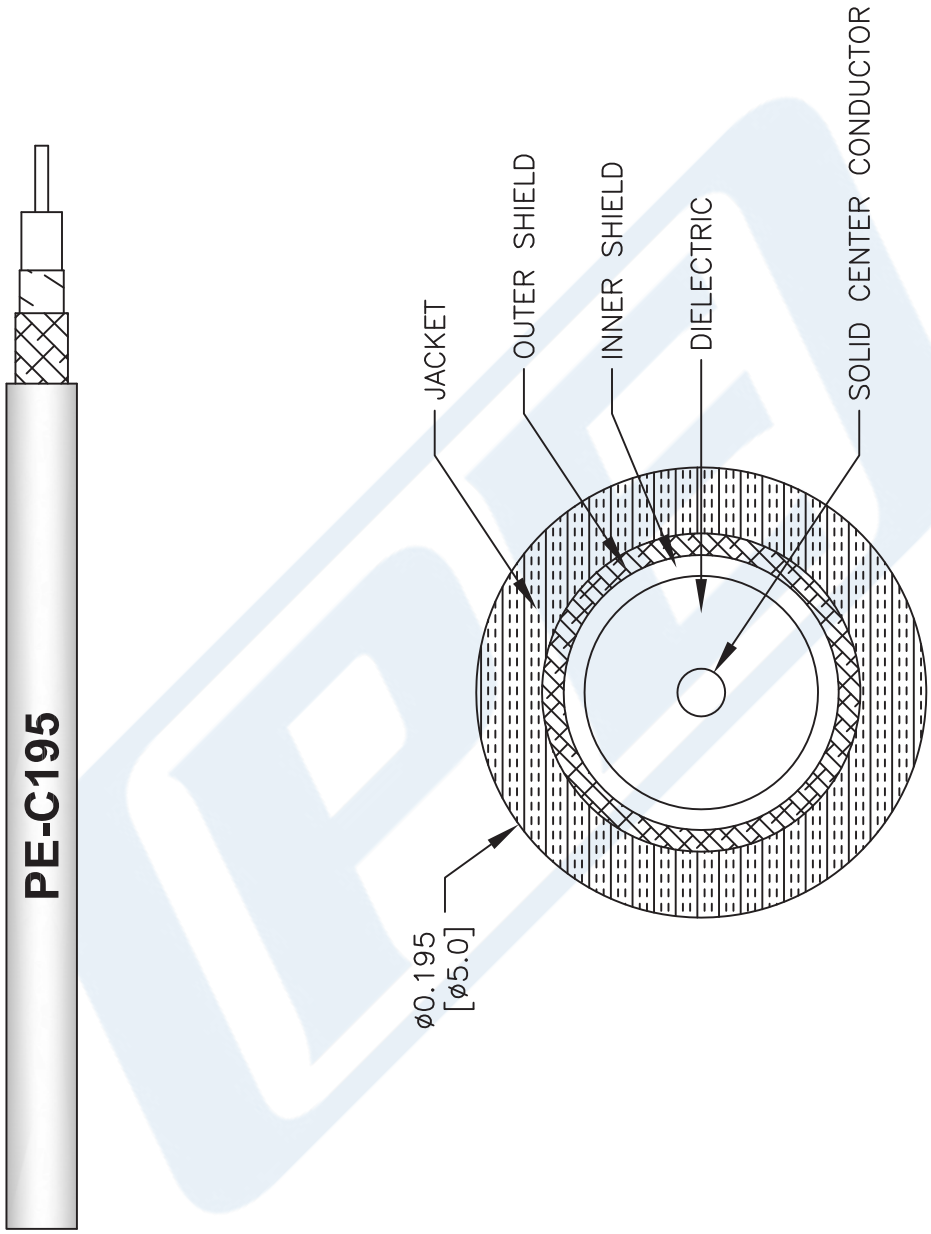

NOTES:
1. UNLESS OTHERWISE SPECIFIED ALL DIMENSIONS ARE NOMINAL.
2. ALL SPECIFICATIONS ARE SUBJECT TO CHANGE WITHOUT NOTICE AT ANY TIME.
3. DIMENSIONS ARE IN INCHES [mm].

DWG TITLE
PE-C195

CAD FILE 111716 | SCALE N/A | SIZE A | 41742

FSCM NO. 53919

PASTERNACK®
THE ENGINEER'S RF SOURCE
Pasternack Enterprises, Inc.
P.O. Box 16759 | Irvine | CA | 92623
Phone: (949) 261-1920 | **Fax:** (949) 261-7451
Website: www.pasternack.com | **E-Mail:** sales@pasternack.com

© 2017 Pasternack Enterprises All Rights Reserved