PASTERNACK
an INFINITE brand

SHV plug crimp right angle for RG59

RF Connectors
Technical Data Sheet

PE45847

Configuration

- SHV Plug Connector
- MIL-STD-348B
- 50 Ohms
- Right Angle Body Geometry
- Connector Interface Types: RG59

Features

- Max. Operating Frequency 300 MHz
- Gold over Nickel over copper Plated Brass Contact

Applications

- General Purpose Test
- Custom Cable Assemblies

Description

Pasternack's PE45847 SHV plug right angle connector with crimp/solder attachment for RG59 is part of our full line of RF components available for same-day shipping. Our SHV plug connector operates up to a maximum frequency of 300 MHz. Its right angle body geometry allows for easier connections in tight spaces.

Our SHV plug right angle connector PE45847 datasheet specifications and drawing with dimensions are shown below in this PDF. Pasternack's broad catalog of RF, microwave and millimeter wave connectors allows designers to configure and customize their signal connections however they like. Whether the need is to provide an I/O for a board design, or simply create a custom cable assembly configuration, Pasternack has the right connector for the job. Pasternack can also expertly build your custom cable assemblies for you and ship same-day.

Electrical Specifications

Description	Minimum	Typical	Maximum	Units
Frequency Range	DC		300	MHz
Operating Voltage (AC)			3,500	Vrms
Dielectric Withstanding Voltage (AC)			5,000	Vrms
Inner Conductor DC Resistance			2	mOhms
Outer Conductor DC Resistance			1.5	mOhms
Insulation Resistance	50,000			MOhms

Mechanical Specifications

Size	
Length	1.01 in [25.65 mm]
Width/Dia.	0.57 in [14.48 mm]
Height	1.48 in [37.59 mm]
Weight	0.062 lbs [28.12 g]

Click the following link (or enter part number in "SEARCH" on website) to obtain additional part information including price, inventory and certifications: SHV plug crimp right angle for RG59 PE45847

Pasternack Enterprises, Inc. • P.O. Box 16759, Irvine, CA 92623
Phone: (866) 727-8376 or (949) 261-1920 • **Fax:** (949) 261-7451
Sales@Pasternack.com • Techsupport@Pasternack.com

© 2020 Pasternack Enterprises All Rights Reserved

SHV plug crimp right angle for RG59

RF Connectors
Technical Data Sheet

PE45847

Material Specifications

Description	Material	Plating
Contact	Brass	Gold over Nickel over copper
Contact Spring		Tinned Copper
Insulation	Teflon	
Body	Brass	Tinned Copper
Coupling Nut	Brass	Tinned Copper
Gasket	Silicone	
Crimp Sleeve	Brass	Tinned Copper
Washer	Brass	Tinned Copper BNC3100-4/W

Environmental Specifications

Temperature

Operating Range	-65 to +165 deg C
Thermal Shock	MIL-STD-202, Method 107, Condition B

Compliance Certifications (see product page for current document)

Plotted and Other Data

Notes:

SHV plug crimp right angle for RG59 from Pasternack Enterprises has same day shipment for domestic and International orders. Our RF, microwave and millimeter wave products maintain a 99.4% availability and are part of the broadest selection in the industry.

Click the following link (or enter part number in “SEARCH” on website) to obtain additional part information including price, inventory and certifications: SHV plug crimp right angle for RG59 PE45847

URL: https://www.pasternack.com/shv-plug-rg59-connector-pe45847-p.aspx

The information contained in this document is accurate to the best of our knowledge and representative of the part described herein. It may be necessary to make modifications to the part and/or the documentation of the part, in order to implement improvements. Pasternack reserves the right to make such changes as required. Unless otherwise stated, all specifications are nominal. Pasternack does not make any representation or warranty regarding the suitability of the part described herein for any particular purpose, and Pasternack does not assume any liability arising out of the use of any part or documentation.

Pasternack Enterprises, Inc. • P.O. Box 16759, Irvine, CA 92623
Phone: (866) 727-8376 or (949) 261-1920 • **Fax:** (949) 261-7451
Sales@Pasternack.com • Techsupport@Pasternack.com

© 2020 Pasternack Enterprises All Rights Reserved

PE45847 CAD Drawing

SHV plug crimp right angle for RG59

REVISIONS			
REV.	DESCRIPTION	DATE	APPROVED
A	INITIAL RELEASE	09/13/2022	AGANWANI

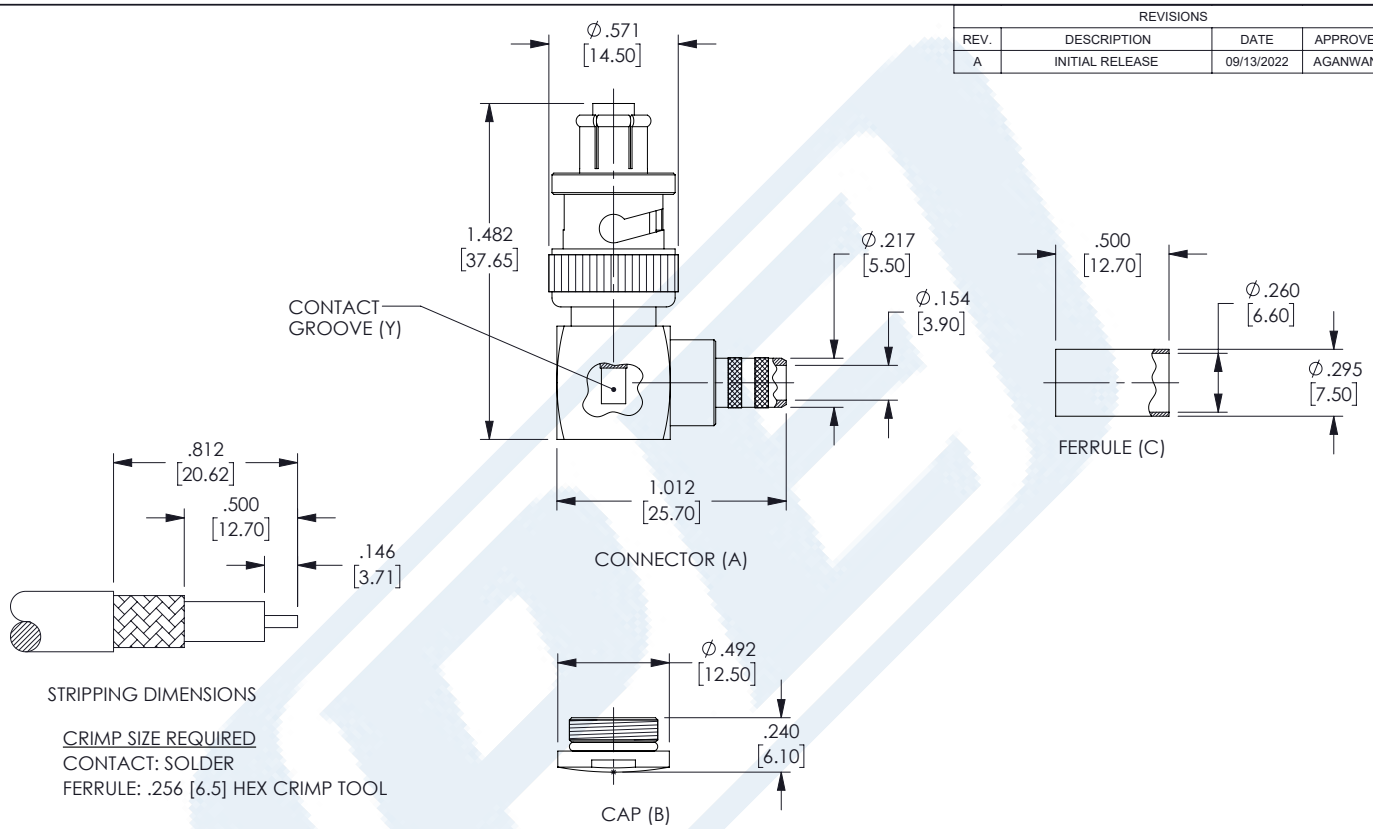

CRIMP SIZE REQUIRED
CONTACT: SOLDER
FERRULE: .256 [6.5] HEX CRIMP TOOL

ASSEMBLY INSTRUCTIONS:

1. STRIP THE CABLE AS SHOWN. DO NOT NICK CENTER CONDUCTOR.
2. SLIDE THE FERRULE (C) OVER THE CABLE JACKET.
3. LOOSEN THE CABLE BRAID, THEN INSERT THE CENTER CONDUCTOR INTO THE CONNECTOR (A) UNTIL IT APPEARS IN THE CONTACT GROOVE (Y). THE CABLE BRAID MUST OVERLAP THE KNURLED SECTION OF THE CONNECTOR (A). SOLDER THE CENTER CONDUCTOR IN THE CONTACT GROOVE.
4. SLIDE THE FERRULE (C) OVER THE CABLE BRAID AND CRIMP IN PLACE.
5. SCREW THE CAP (B) INTO THE CONNECTOR (A).

THESE COMMODITIES, TECHNOLOGY OR SOFTWARE WERE EXPORTED FROM THE UNITED STATES IN ACCORDANCE WITH THE EXPORT ADMINISTRATION REGULATIONS. DIVERSION CONTRARY TO U.S. LAW PROHIBITED.

UNLESS OTHERWISE SPECIFIED
LEADING DIMENSIONS ARE INCHES
DIMENSIONS IN [ ] ARE MILLIMETERS

TOLERANCES:
.X = ± .2 [5.08]
.XX = ± .02 [.51]
.XXX = ± .005 [.13]
FRACTIONS ± 1/32
ANGLES ± 1°

CABLE LENGTH (L) TOLERANCES:
L ≤ 12 [305] = +1 [25] / -0
12 [305] < L ≤ 60 [1524] = +2 [51] / -0
60 [1524] < L ≤ 120 [3048] = +4 [102] / -0
120 [3048] < L ≤ 300 [7620] = +6 [152] / -0
300 [7620] < L = +5%L / -0

ALL DIMENSIONS SHOWN ARE FOR REFERENCE ONLY.

PASTERNACK an INFINITE brand
Pasternack Enterprises, Inc.
P.O.Box 16759, Irvine, CA 92623.
Phone: 1.949.261.1920 | 1.866.727.8376
Fax: 1.949.261.7451
Website: www.pasternack.com
E-mail: sales@pasternack.com

THIRD-ANGLE PROJECTION

THE INFORMATION AND DESIGN IN THIS DOCUMENT IS THE PROPERTY OF PASTERNACK CORPORATION ALL RIGHTS RESERVED.

SHEET 1 OF 1
SCALE N/A

SIZE	CAGE CODE	DRAWN BY	ITEM NO.	REV
A	53919	AKRESOWSK	PE45847	A

T-Rev.D

PASTERNACK®
THE ENGINEER'S RF SOURCE

75 Ohm 1.6/5.6 Plug Connector Crimp/Solder Attachment for RG59, RG62, RG71

Configuration

- 1.6/5.6 Plug Connector
- 75 Ohms
- Straight Body Geometry
- RG59, RG62, RG71 Interface Type
- Crimp/Solder Attachment

Features

- Gold Plated Brass Contact
- 3 µin minimum contact plating

Applications

- General Purpose Test
- Custom Cable Assemblies

Description

Pasternack's PE44263 75 ohm 1.6/5.6 plug connector with crimp/solder attachment for RG59, RG62 and RG71 is part of our full line of RF components available for same-day shipping.

Our 75 ohm 1.6/5.6 plug connector PE44263 datasheet specifications and drawing with dimensions are shown below in this PDF. Pasternack's broad catalog of RF, microwave and millimeter wave connectors allows designers to configure and customize their signal connections however they like. Whether the need is to provide an I/O for a board design, or simply create a custom cable assembly configuration, Pasternack has the right connector for the job. Pasternack can also expertly build your custom cable assemblies for you and ship same-day.

Mechanical Specifications

Size

Length	1.215 in [30.86 mm]
Width/Dia.	0.425 in [10.80 mm]
Weight	0.021 lbs [9.53 g]

Material Specifications

Description	Material	Plating
Contact	Brass	Gold 3 µin minimum
Insulation	PTFE	
Body	Brass	Nickel 100 µin minimum
Coupling Nut	Brass	Nickel 100 µin minimum

Click the following link (or enter part number in "SEARCH" on website) to obtain additional part information including price, inventory and certifications: 75 Ohm 1.6/5.6 Plug Connector Crimp/Solder Attachment for RG59, RG62, RG71 PE44263

Pasternack Enterprises, Inc. • P.O. Box 16759, Irvine, CA 92623
Phone: (866) 727-8376 or (949) 261-1920 • **Fax:** (949) 261-7451
Sales@Pasternack.com • Techsupport@Pasternack.com

© 2016 Pasternack Enterprises All Rights Reserved

75 Ohm 1.6/5.6 Plug Connector Crimp/Solder Attachment for RG59, RG62, RG71

Compliance Certifications (see product page for current document)

Plotted and Other Data

Notes:

75 Ohm 1.6/5.6 Plug Connector Crimp/Solder Attachment for RG59, RG62, RG71 from Pasternack Enterprises has same day shipment for domestic and International orders. Our RF, microwave and millimeter wave products maintain a 99% availability and are part of the broadest selection in the industry.

Click the following link (or enter part number in "SEARCH" on website) to obtain additional part information including price, inventory and certifications: 75 Ohm 1.6/5.6 Plug Connector Crimp/Solder Attachment for RG59, RG62, RG71 PE44263

URL: https://www.pasternack.com/1.6-5.6-plug-standard-rg59-connector-pe44263-p.aspx

The information contained in this document is accurate to the best of our knowledge and representative of the part described herein. It may be necessary to make modifications to the part and/or the documentation of the part, in order to implement improvements. Pasternack reserves the right to make such changes as required. Unless otherwise stated, all specifications are nominal. Pasternack does not make any representation or warranty regarding the suitability of the part described herein for any particular purpose, and Pasternack does not assume any liability arising out of the use of any part or documentation.

Pasternack Enterprises, Inc. • P.O. Box 16759, Irvine, CA 92623
Phone: (866) 727-8376 or (949) 261-1920 • **Fax:** (949) 261-7451
Sales@Pasternack.com • Techsupport@Pasternack.com

© 2016 Pasternack Enterprises All Rights Reserved

PE44263 CAD Drawing

75 Ohm 1.6/5.6 Plug Connector Crimp/Solder Attachment for RG59, RG62, RG71

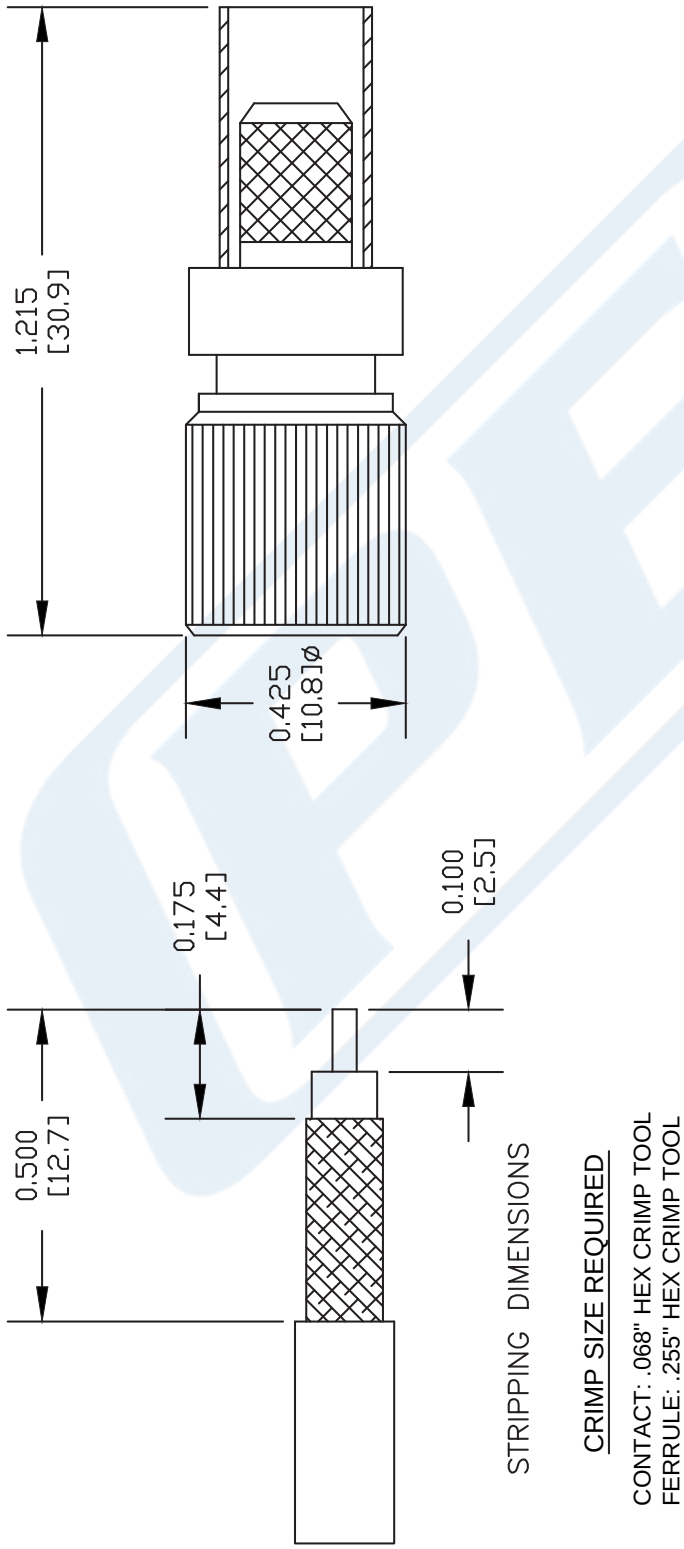

NOTES:
1. UNLESS OTHERWISE SPECIFIED ALL DIMENSIONS ARE NOMINAL.
2. ALL SPECIFICATIONS ARE SUBJECT TO CHANGE WITHOUT NOTICE AT ANY TIME.
3. DIMENSIONS ARE IN INCHES [mm].
4. FITS MIL-C-17 AND EQUIVALENT CABLES.

DWG TITLE
PE44263

FSCM NO. 53919

CAD FILE 070202 | SCALE N/A | SIZE A | XXXX

PASTERNACK®
Pasternack Enterprises, Inc.
P.O. Box 16759 | Irvine | CA | 92623
Phone: (949) 261-1920 | **Fax:** (949) 261-7451
Website: www.pasternack.com | **E-Mail:** sales@pasternack.com

© 2016 Pasternack Enterprises All Rights Reserved

PASTERNACK
an INFINITE brand

75 Ohm Flexible RG59 Coax Cable Single Shielded with Black PVC (NC) Jacket

RF Cables
Technical Data Sheet

RG59B/U

Configuration

- Flexible Cable
- 1 Shield(s)

Electrical Specifications

Description	Minimum	Typical	Maximum	Units
Frequency Range	DC		1,000	MHz
Impedance		75 3		Ohms
Velocity of Propagation		66		%
Operating Voltage (AC)			2,300	Vrms
Nominal Capacitance		20.4 [66.93]		pF/ft [pF/m]

Performance by Frequency Band

Description	F1	F2	F3	F4	F5	Units
Frequency	100	200	550	800	1,000	MHz
Attenuation, Max	3.81	5.37	9.18	11.21	12.68	dB/100ft
	12.5	17.62	30.12	36.78	41.6	dB/100m

Mechanical Specifications

Diameter	0.242 in [6.15 mm]
Weight	0.039 lbs/ft [0.06 Kg/m]

Construction Specifications

Description	Material and Plating	Diameter
Inner Conductor	Copper Clad Steel1	0.022 in 0.56 mm
Conductor Type	Solid	
Dielectric	PE	0.146 in 3.71 mm
First Shield	Copper Braid	0.165 in 4.19 mm

Click the following link (or enter part number in “SEARCH” on website) to obtain additional part information including price, inventory and certifications: 75 Ohm Flexible RG59 Coax Cable Single Shielded with Black PVC (NC) Jacket RG59B/U

Pasternack Enterprises, Inc. • P.O. Box 16759, Irvine, CA 92623
Phone: (866) 727-8376 or (949) 261-1920 • **Fax:** (949) 261-7451
Sales@Pasternack.com • Techsupport@Pasternack.com

© 2019 Pasternack Enterprises All Rights Reserved

75 Ohm Flexible RG59 Coax Cable Single Shielded with Black PVC (NC) Jacket

Jacket	PVC (NC), Black	0.242 in [6.15 mm]

Environmental Specifications

Temperature

Operating Range	-25 to +70 deg C

Compliance Certifications (see product page for current document)

Plotted and Other Data

Notes:

75 Ohm Flexible RG59 Coax Cable Single Shielded with Black PVC (NC) Jacket from Pasternack Enterprises has same day shipment for domestic and International orders. Our RF, microwave and millimeter wave products maintain a 99.4% availability and are part of the broadest selection in the industry.

Click the following link (or enter part number in “SEARCH” on website) to obtain additional part information including price, inventory and certifications: 75 Ohm Flexible RG59 Coax Cable Single Shielded with Black PVC (NC) Jacket RG59B/U

URL: https://www.pasternack.com/flexible-0.242-rg59-75-ohm-coax-cable-pvc-jacket-rg59b-u-p.aspx

The information contained in this document is accurate to the best of our knowledge and representative of the part described herein. It may be necessary to make modifications to the part and/or the documentation of the part, in order to implement improvements. Pasternack reserves the right to make such changes as required. Unless otherwise stated, all specifications are nominal. Pasternack does not make any representation or warranty regarding the suitability of the part described herein for any particular purpose, and Pasternack does not assume any liability arising out of the use of any part or documentation.

Pasternack Enterprises, Inc. • P.O. Box 16759, Irvine, CA 92623
Phone: (866) 727-8376 or (949) 261-1920 • **Fax:** (949) 261-7451
Sales@Pasternack.com • Techsupport@Pasternack.com

© 2019 Pasternack Enterprises All Rights Reserved

RG59B/U CAD Drawing

75 Ohm Flexible RG59 Coax Cable Single Shielded with Black PVC (NC) Jacket

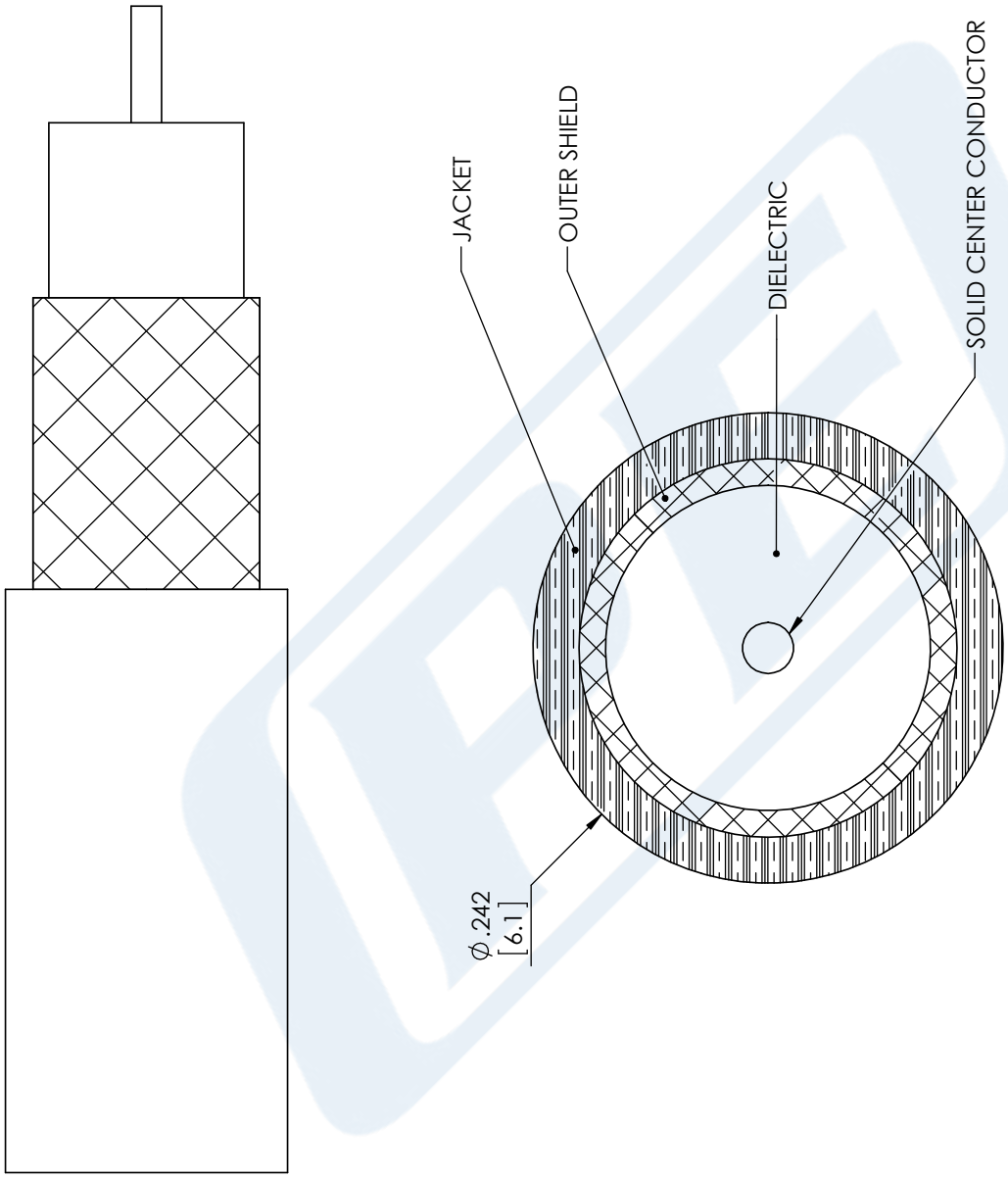

STANDARD TOLERANCES	
.X	±0.2
.XX	±0.01
.XXX	±0.005

*STANDARD TOLERANCES APPLY ONLY TO DIMENSIONS IN INCHES

NOTES:
1. UNLESS OTHERWISE SPECIFIED ALL DIMENSIONS ARE NOMINAL.
2. ALL SPECIFICATIONS ARE SUBJECT TO CHANGE WITHOUT NOTICE AT ANY TIME
3. DIMENSIONS ARE IN INCHES [mm].

DWG TITLE RG59B/U

CAD FILE 11/28/17 | SCALE N/A | SIZE A | CN2245

CAGE CODE 53919

PASTERNACK® THE ENGINEER'S RF SOURCE
Pasternack Enterprises, Inc.
P.O. Box 16759 | Irvine | CA | 92623
Phone: (949) 261-1920 | **Fax:** (949) 261-7451
Website: www.pasternack.com | **E-Mail:** sales@pasternack.com

© 2019 Pasternack Enterprises All Rights Reserved