# MHV Male Connector Crimp/Solder Attachment for RG58, RG303, RG141, PE-C195, PE-P195, LMR-195, 0.195 inch

## Configuration

- MHV Male Connector
- MIL-STD-348A
- 50 Ohms
- Straight Body Geometry
- RG58, RG303, RG141, PE-C195, PE-P195, LMR-195, 0.195 inch Interface Type
- Crimp/Solder Attachment

## Features

- Max. Operating Frequency 300 MHz
- Good VSWR of 1.3:1
- Gold Plated Brass Contact
- 30 µin minimum contact plating

## Applications

- General Purpose Test
- Custom Cable Assemblies

### Description

Pasternack's PE4093 MHV male connector with crimp/solder attachment for RG58, RG303, RG141, PE-C195, PE-P195, LMR-195 and 0.195 inch is part of our full line of RF components available for same-day shipping. Our MHV male connector operates up to a maximum frequency of 300 MHz and offers good VSWR of 1.3:1.

Our MHV male connector PE4093 datasheet specifications and drawing with dimensions are shown below in this PDF. Pasternack's broad catalog of RF, microwave and millimeter wave connectors allows designers to configure and customize their signal connections however they like. Whether the need is to provide an I/O for a board design, or simply create a custom cable assembly configuration, Pasternack has the right connector for the job. Pasternack can also expertly build your custom cable assemblies for you and ship same-day.

### Electrical Specifications

| Description | Minimum | Typical | Maximum | Units |
|---|---|---|---|---|
| Frequency Range | DC | | 300 | MHz |
| VSWR | | | 1.3:1 | |
| Operating Voltage (AC) | | | 1,400 | Vrms |

### Mechanical Specifications

**Size**

| | |
|---|---|
| Length | 1.508 in [38.3 mm] |
| Width/Dia. | 0.57 in [14.48 mm] |
| Weight | 0.038 lbs [17.24 g] |

Click the following link (or enter part number in "SEARCH" on website) to obtain additional part information including price, inventory and certifications: MHV Male Connector Crimp/Solder Attachment for RG58, RG303, RG141, PE-C195, PE-P195, LMR-195, 0.195 inch PE4093

Pasternack Enterprises, Inc. • P.O. Box 16759, Irvine, CA 92623
**Phone:** (866) 727-8376 or (949) 261-1920 • **Fax:** (949) 261-7451
Sales@Pasternack.com • Techsupport@Pasternack.com

© 2016 Pasternack Enterprises All Rights Reserved

# MHV Male Connector Crimp/Solder Attachment for RG58, RG303, RG141, PE-C195, PE-P195, LMR-195, 0.195 inch



**Material Specifications**

| Description | Material | Plating |
|---|---|---|
| Contact | Brass | Gold<br>30 µin minimum |
| Insulation | PTFE | |
| Body | Brass | Nickel<br>100 µin minimum |
| Coupling Nut | Brass | Nickel<br>100 µin minimum |
| Crimp Sleeve | Brass | Nickel |

## Environmental Specifications

**Temperature**

Operating Range -65 to +165 deg C

## Compliance Certifications (see product page for current document)

## Plotted and Other Data

Notes:

MHV Male Connector Crimp/Solder Attachment for RG58, RG303, RG141, PE-C195, PE-P195, LMR-195, 0.195 inch from Pasternack Enterprises has same day shipment for domestic and International orders. Our RF, microwave and millimeter wave products maintain a 99% availability and are part of the broadest selection in the industry.

Click the following link (or enter part number in "SEARCH" on website) to obtain additional part information including price, inventory and certifications: MHV Male Connector Crimp/Solder Attachment for RG58, RG303, RG141, PE-C195, PE-P195, LMR-195, 0.195 inch PE4093

URL: https://www.pasternack.com/mhv-male-rg58-rg303-rg141-pe-c195-pe-p195-lmr-195-connector-pe4093-p.aspx

The information contained in this document is accurate to the best of our knowledge and representative of the part described herein. It may be necessary to make modifications to the part and/or the documentation of the part, in order to implement improvements. Pasternack reserves the right to make such changes as required. Unless otherwise stated, all specifications are nominal. Pasternack does not make any representation or warranty regarding the suitability of the part described herein for any particular purpose, and Pasternack does not assume any liability arising out of the use of any part or documentation.

Pasternack Enterprises, Inc. • P.O. Box 16759, Irvine, CA 92623
**Phone:** (866) 727-8376 or (949) 261-1920 • **Fax:** (949) 261-7451
Sales@Pasternack.com • Techsupport@Pasternack.com

© 2016 Pasternack Enterprises All Rights Reserved

# PE4093 CAD Drawing

MHV Male Connector Crimp/Solder Attachment for RG58, RG303, RG141, PE-C195, PE-P195, LMR-195, 0.195 inch

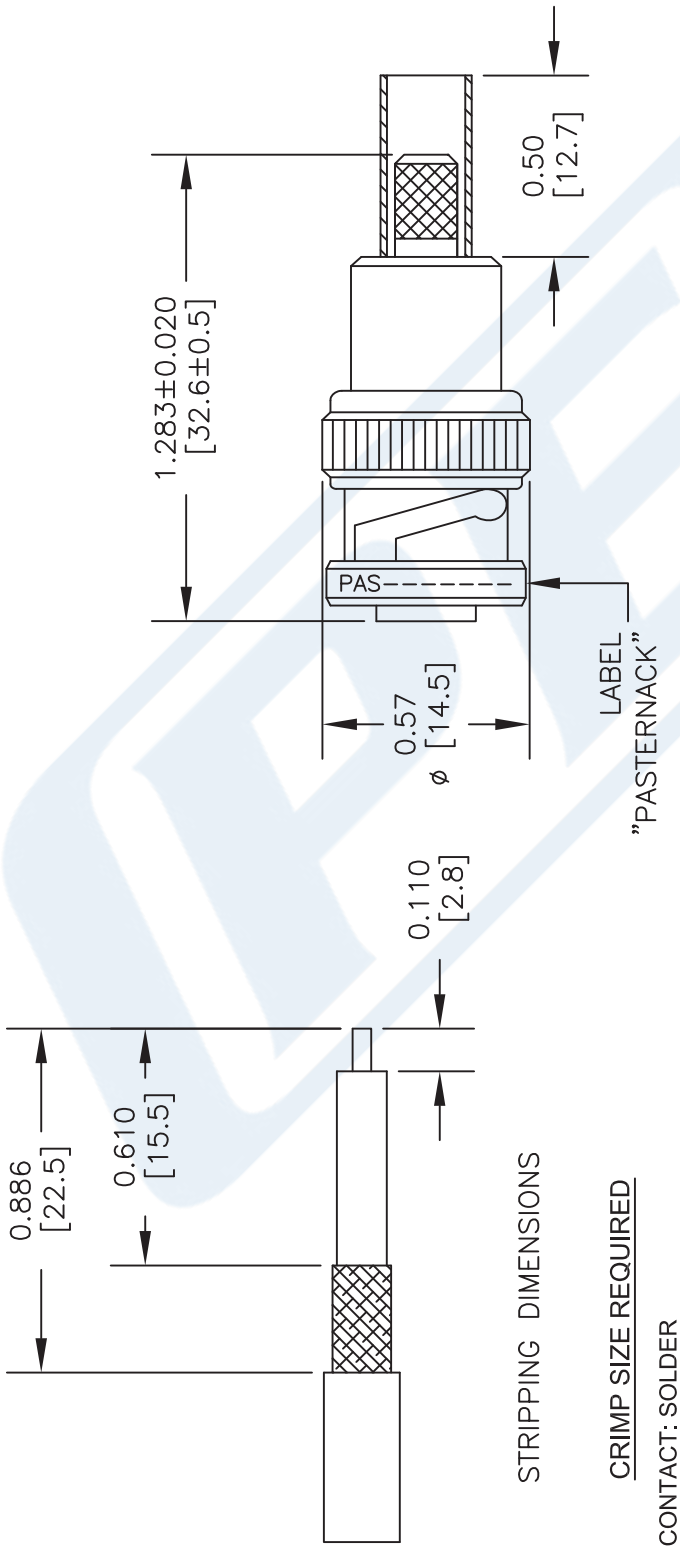


STRIPPING DIMENSIONS

CRIMP SIZE REQUIRED

CONTACT: SOLDER
FERRULE: .213" HEX CRIMP TOOL

| STANDARD TOLERANCES | |
|---|---|
| .X | ±0.2 |
| .XX | ±0.1 |
| .XXX | ±0.05 |

*STANDARD TOLERANCES APPLY ONLY TO DIMENSIONS IN INCHES

NOTES:
1. UNLESS OTHERWISE SPECIFIED ALL DIMENSIONS ARE NOMINAL.
2. ALL SPECIFICATIONS ARE SUBJECT TO CHANGE WITHOUT NOTICE AT ANY TIME.
3. DIMENSIONS ARE IN INCHES [mm].

DWG TITLE
PE4093

FSCM NO. 53919

CAD FILE 040116 | SCALE N/A | SIZE A | 3045

PASTERNACK®
THE ENGINEER'S RF SOURCE
Pasternack Enterprises, Inc.
P.O. Box 16759 | Irvine | CA | 92623
**Phone:** (949) 261-1920 | **Fax:** (949) 261-7451
**Website:** www.pasternack.com | **E-Mail:** sales@pasternack.com

© 2016 Pasternack Enterprises All Rights Reserved

PASTERNACK
an INFINITE brand

# N Male Connector Clamp/Solder Attachment for RG58, RG55, RG141, RG142, RG223, RG400, RG303, PE-C195, PE-P195, LMR-195

## RF Connectors
## Technical Data Sheet

**PE4081**

## Configuration

- N Male Connector
- MIL-STD-348A
- 50 Ohms
- Straight Body Geometry
- Connector Interface Types: RG58, RG55, RG141, RG142, RG223, RG400, RG303, PE-C195, PE-P195, LMR-195

## Features

- Max. Operating Frequency 6 GHz
- Good VSWR of 1.3:1
- Gold Plated Brass Contact
- 30 µin minimum contact plating

## Applications

- General Purpose Test
- Custom Cable Assemblies

### Description

Pasternack's PE4081 type N male connector with clamp/solder attachment for RG58, RG55, RG141, RG142, RG223, RG400, RG303, PE-C195, PE-P195 and LMR-195 is part of our full line of RF components available for same-day shipping. Our type N male connector operates up to a maximum frequency of 6 GHz and offers good VSWR of 1.3:1.

Our type N male connector PE4081 datasheet specifications and drawing with dimensions are shown below in this PDF. Pasternack's broad catalog of RF, microwave and millimeter wave connectors allows designers to configure and customize their signal connections however they like. Whether the need is to provide an I/O for a board design, or simply create a custom cable assembly configuration, Pasternack has the right connector for the job. Pasternack can also expertly build your custom cable assemblies for you and ship same-day.

### Electrical Specifications

| Description | Minimum | Typical | Maximum | Units |
|---|---|---|---|---|
| Frequency Range | DC | | 6 | GHz |
| VSWR | | | 1.3:1 | |
| Operating Voltage (AC) | | | 1,000 | Vrms |

### Mechanical Specifications

| **Size** | |
|---|---|
| Length | 1.35 in [34.29 mm] |
| Width/Dia. | 0.83 in [21.08 mm] |
| Height | 0 in [0 mm] |
| Weight | 0.075 lbs [34.02 g] |

Click the following link (or enter part number in "SEARCH" on website) to obtain additional part information including price, inventory and certifications: N Male Connector Clamp/Solder Attachment for RG58, RG55, RG141, RG142, RG223, RG400, RG303, PE-C195, PE-P195, LMR-195 PE4081

Pasternack Enterprises, Inc. • P.O. Box 16759, Irvine, CA 92623
**Phone:** (866) 727-8376 or (949) 261-1920 • **Fax:** (949) 261-7451
Sales@Pasternack.com • Techsupport@Pasternack.com

© 2020 Pasternack Enterprises All Rights Reserved

# N Male Connector Clamp/Solder Attachment for RG58, RG55, RG141, RG142, RG223, RG400, RG303, PE-C195, PE-P195, LMR-195

## RF Connectors
## Technical Data Sheet

**PE4081**

### Material Specifications

| Description | Material | Plating |
|---|---|---|
| Contact | Brass | Gold<br>30 µin minimum |
| Insulation | PTFE | |
| Body | Brass | Nickel<br>100 µin minimum |
| Coupling Nut | Brass | Nickel<br>100 µin minimum |

Mechanical Specification Notes:
When attaching the connector to the cable use a clamp torque value of 26 to 30 in-lbs [2.94 to 3.39 Nm]

### Environmental Specifications

**Temperature**

Operating Range -65 to +165 deg C

### Compliance Certifications (see product page for current document)

### Plotted and Other Data

Notes:

N Male Connector Clamp/Solder Attachment for RG58, RG55, RG141, RG142, RG223, RG400, RG303, PE-C195, PE-P195, LMR-195 from Pasternack Enterprises has same day shipment for domestic and International orders. Our RF, microwave and millimeter wave products maintain a 99.4% availability and are part of the broadest selection in the industry.

Click the following link (or enter part number in “SEARCH” on website) to obtain additional part information including price, inventory and certifications: N Male Connector Clamp/Solder Attachment for RG58, RG55, RG141, RG142, RG223, RG400, RG303, PE-C195, PE-P195, LMR-195 PE4081

URL: https://www.pasternack.com/n-male-standard-rg58-rg55-rg141-rg142-rg223-rg400-connector-pe4081-p.aspx

The information contained in this document is accurate to the best of our knowledge and representative of the part described herein. It may be necessary to make modifications to the part and/or the documentation of the part, in order to implement improvements. Pasternack reserves the right to make such changes as required. Unless otherwise stated, all specifications are nominal. Pasternack does not make any representation or warranty regarding the suitability of the part described herein for any particular purpose, and Pasternack does not assume any liability arising out of the use of any part or documentation.

Pasternack Enterprises, Inc. • P.O. Box 16759, Irvine, CA 92623
**Phone:** (866) 727-8376 or (949) 261-1920 • **Fax:** (949) 261-7451
Sales@Pasternack.com • Techsupport@Pasternack.com

© 2020 Pasternack Enterprises All Rights Reserved

# PE4081 CAD Drawing

N Male Connector Clamp/Solder Attachment for RG58, RG55, RG141, RG142, RG223, RG400, RG303, PE-C195, PE-P195, LMR-195

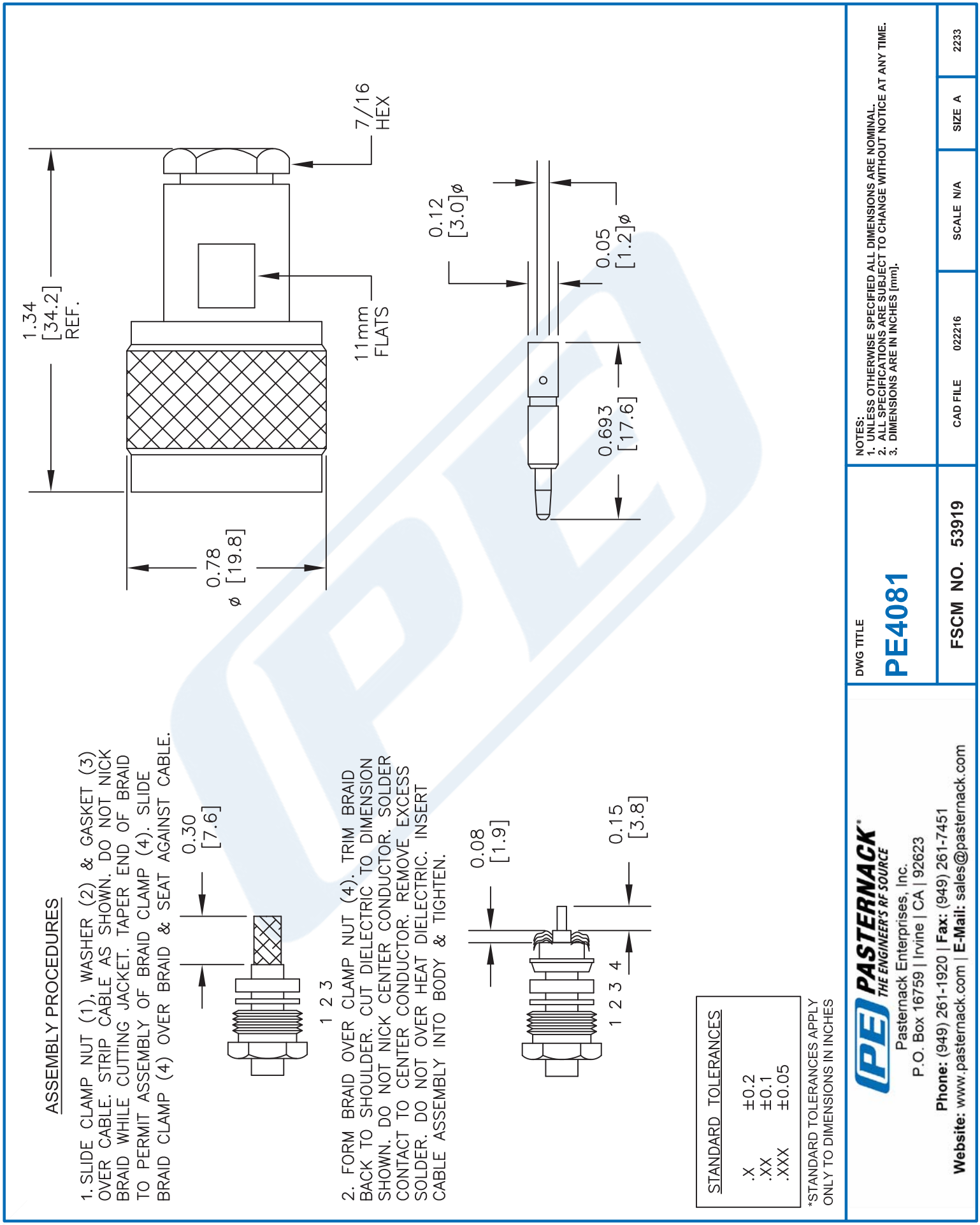


© 2020 Pasternack Enterprises All Rights Reserved

TIMES MICROWAVE SYSTEMS

# LMR®-195
# Flexible Low Loss Communications Coax

## Ideal for...

- Jumper Assemblies in Wireless Communications Systems
- Short Antenna Feeder runs
- Any application (e.g. WLL, GPS, LMR, WLAN, WISP, WiMax, SCADA, Mobile Antennas) requiring an easily routed, low loss RF cable
- Drop-in replacement for RG-58 and RG-142

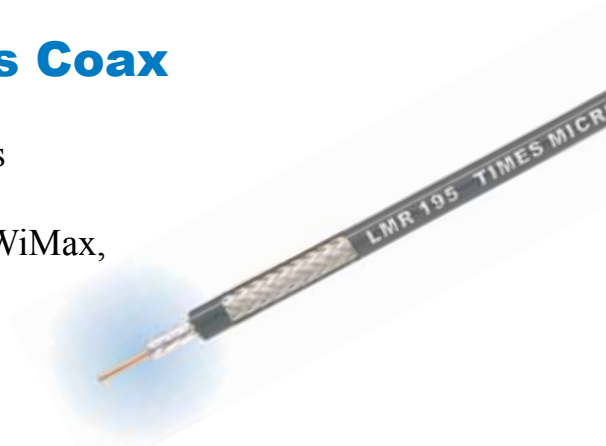


• **LMR®** standard is a UV Resistant Polyethylene jacketed cable designed for 20-year service outdoor use. The bending and handling characteristics are significantly better than air-dielectric and corrugated hard-line cables.

• **LMR®- DB** is identical to standard LMR plus has the advantage of being watertight. The addition of waterproofing compound in and around the foil/braid insures continuous reliable service should the jacket be inadvertently damaged during installation or in the future.

• **LMR®- FR** is a non-halogen (non-toxic), low smoke, fire retardant cable designed for in-building runs that can be routed anywhere except air handling plenums. LMR-FR is UL/NEC & CSA rated 'CMR' and 'FT4' respectively, meets FAA FAR25 requirements and is MSHA-P for mining applications.

• **LMR®- FR-PVC** is a general-purpose indoor cable and has a UL/NEC & CSA rating of 'CMR' and 'FT4' respectively. It is less expensive than LMR-FR, however it emits toxic fumes (HCL) and greater smoke density when burned.

• **LMR®- PVC** is designed for low loss general-purpose applications and is somewhat more flexible than the standard polyethylene jacketed LMR.

• **LMR®- PVC-W** is a white-jacketed version of LMR-PVC for marine and other applications where color compatibility is desired.

• **LMR®- MA** is a flexible cable designed specifically for mobile antenna applications. It has a PVC jacket and un-bonded aluminum tape to facilitate end stripping with automated equipment.

• **Flexibility** and bendability are hallmarks of the LMR-195 cable design. The flexible outer conductor enables the tightest bend radius available for any cable of similar size and performance.

• **Low Loss** is another hallmark feature of LMR-195. Size for size LMR has the lowest loss of any flexible cable and comparable loss to semirigid hard-line cables.

• **RF Shielding** is 50 dB greater than typical single shielded coax (40 dB). The multi-ply bonded foil outer conductor is rated conservatively at > 90 dB (i.e. >180 dB between two adjacent cables).

• **Weatherability**: LMR-195 cables designed for outdoor exposure incorporate the best materials for UV resistance and have life expectancy in excess of 20 years.

• **Connectors**: A wide variety of connectors are available for LMR-195 cable, including all common interface types, reverse polarity, and a choice of solder or non-solder center pins. Most LMR connectors employ crimp outer attachment using standard hex crimp sizes.

• **Cable Assemblies**: All LMR-195 cable types are available as pre-terminated cable assemblies. Refer to the section on FlexTech for further details.

| Part Description | | | | Stock |
|---|---|---|---|---|
| Part Number | Application | Jacket | Color | Code |
| LMR-195 | Outdoor | PE | Black | 54110 |
| LMR-195-DB | Outdoor/Watertight | PE | Black | 54113 |
| LMR-195-FR | Indoor/Outdoor Riser CMR | FRPE | Black | 54111 |
| LMR-195-FR-W | Indoor/Outdoor Riser CMR | FRPE | White | 54158 |
| LMR-195-FR-PVC | Indoor/Outdoor Riser CMR | FRPVC | Black | 54105 |
| LMR-195-MA | Mobile Antennas | PVC | Black | 54210 |
| LMR-195-PVC | General Purpose | PVC | Black | 54215 |
| LMR-195-PVC-W | General Purpose | PVC | White | 54199 |

| Construction Specifications | | | |
|---|---|---|---|
| Description | Material | In. | (mm) |
| Inner Conductor | Solid BC | 0.037 | (0.94) |
| Dielectric | Foam PE | 0.110 | (2.79) |
| Outer Conductor | Aluminum Tape | 0.116 | (2.95) |
| Overall Braid | Tinned Copper | 0.139 | (3.53) |
| Jacket | (see table above) | 0.195 | (4.95) |

## Mechanical Specifications

| Performance Property | Units | US | (metric) |
|---|---|---|---|
| Bend Radius: installation | in. (mm) | 0.5 | (12.7) |
| Bend Radius: repeated | in. (mm) | 2.0 | (50.8) |
| Bending Moment | ft-lb (N-m) | 0.2 | (0.27) |
| Weight | lb/ft (kg/m) | 0.021 | (0.03) |
| Tensile Strength | lb (kg) | 40 | (18.2) |
| Flat Plate Crush | lb/in. (kg/mm) | 15 | (0.27) |

## Environmental Specifications

| Performance Property | °F | °C |
|---|---|---|
| Installation Temperature Range | -40/+185 | -40/+85 |
| Storage Temperature Range | -94/+185 | -70/+85 |
| Operating Temperature Range | -40/+185 | -40/+85 |

## Electrical Specifications

| Performance Property | Units | US | (metric) |
|---|---|---|---|
| Velocity of Propagation | % | 76 | |
| Dielectric Constant | NA | 1.56 | |
| Time Delay | nS/ft (nS/m) | 1.27 | (4.17) |
| Impedance | ohms | 50 | |
| Capacitance | pF/ft (pF/m) | 25.4 | (83.3) |
| Inductance | uH/ft (uH/m) | 0.064 | (0.21) |
| Shielding Effectiveness | dB | >90 | |
| DC Resistance | | | |
| Inner Conductor | ohms/1000ft (/km) | 7.6 | (24.9) |
| Outer Conductor | ohms/1000ft (/km) | 4.9 | (16.1) |
| Voltage Withstand | Volts DC | 1000 | |
| Jacket Spark | Volts RMS | 3000 | |
| Peak Power | kW | 2.5 | |

## Attenuation vs. Frequency (typical)

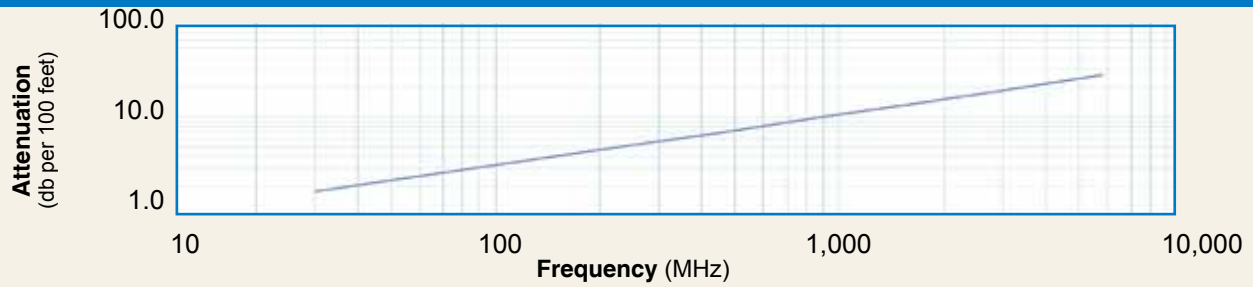


| Frequency (MHz) | 30 | 50 | 150 | 220 | 450 | 900 | 1500 | 1800 | 2000 | 2500 | 5800 |
|---|---|---|---|---|---|---|---|---|---|---|---|
| **Attenuation dB/100 ft** | 2.0 | 2.5 | 4.4 | 5.4 | 7.8 | 11.1 | 14.5 | 16.0 | 16.9 | 19.0 | 29.9 |
| **Attenuation dB/100 m** | 6.5 | 8.4 | 14.6 | 17.7 | 25.5 | 36.5 | 47.7 | 52.5 | 55.4 | 62.4 | 98.1 |
| **Avg. Power kW** | 0.89 | 0.68 | 0.39 | 0.32 | 0.22 | 0.16 | 0.12 | 0.11 | 0.10 | 0.09 | 0.06 |

**Calculate Attenuation** = (0.356859) • $\sqrt{FMHz}$ + (0.000470) • FMHz (interactive calculator available at http://www.timesmicrowave.com/cable_calculators)
**Attenuation:** VSWR=1.0 ; Ambient = +25°C (77°F) **Power:** VSWR=1.0; Ambient = +40°C; Inner Conductor = 100°C (212°F);
Sea Level; dry air; atmospheric pressure; no solar loading

TC-195-NM

TC-195-SM

TC-195-NM-RA-D

TC-195-TM

# Connectors

| Interface | Description | Part Number | Stock Code | VSWR** Freq. (GHz) | Coupling Nut | Inner Contact Attach | Outer Contact Attach | Finish* Body /Pin | Length in (mm) | Width in (mm) | Weight lb (g) |
|---|---|---|---|---|---|---|---|---|---|---|---|
| N male | Straight Plug | TC-195-NM | 3190-1555 | <1.25:1 (2.5) | Knurl | Solder | Crimp | S/G | 1.5 (38.1) | 0.75 (19.1) | 0.073 (33.1) |
| N male | Right Angle | TC-195-NMH-RA-D | 3190-2425 | <1.35:1 (6) | Hex/Knurl | Solder | Crimp | A/G | 1.3 (32.1) | 1.19 (30.1) | 0.083 (37.5) |
| SMA male | Straight Plug | TC-195-SM | 3190-1553 | <1.25:1 (2.5) | Hex | Solder | Crimp | SS/G | 1.0 (25.4) | 0.32 (8.1) | 0.015 (6.8) |
| TNC male | Straight Plug | TC-195-TM | 3190-1554 | <1.25:1 (2.5) | Knurl | Solder | Crimp | S/G | 1.4 (35.6) | 0.59 (15.0) | 0.045 (20.4) |

* Finish metals: N=Nickel, S=Silver, G=Gold, SS=Stainless Steel, A=Alballoy **VSWR spec based on 3 foot cable with a connector pair

# Install Tools

| Type | Part Number | Stock Code | Description |
|---|---|---|---|
| Crimp Tool | CT-240/200/195/100 | 3190-667 | Crimp tool for LMR-100,195, 200 and 240 connectors |
| Cutting Tool | CCT-01 | 3190-1544 | Cable end flush cut tool |
| Deburr Tool | DBT-U | 3192-001 | Removes center conductor rough edges |
| Replacement Blade | RB-01 | 3190-1609 | Replacement blade for cutting tool |

CT-240/200/195/100

DBT-U

CCT-01