PASTERNACK
an INFINITE brand

2.2-5 Male Low PIM Connector Solder Attachment for PE-SR402FL, PE-SR402FLJ, RG402, PE-SR402AL

RF Connectors
Technical Data Sheet

PE45827

Configuration

- 2.2-5 Male Connector
- 50 Ohms
- Straight Body Geometry
- Connector Interface Types: PE-SR402FL, PE-SR-402FLJ, RG402, PE-SR402AL
- Low PIM Design

Features

- Max. Operating Frequency 6 GHz
- PIM levels lower than -155 dBc
- Silver Plated Brass Contact

Applications

- General Purpose Test
- Wireless Communications
- Custom Cable Assemblies
- Low PIM Applications

Description

Pasternack's PE45827 2.2-5 male connector with solder/solder attachment for PE-SR402FL, PE-SR402FLJ, RG402 and PE-SR402AL is part of our full line of RF components available for same-day shipping. Our 2.2-5 male connector operates up to a maximum frequency of 6 GHz. The 2.2-5 male connector also has low passive intermodulation of -155 dBc.

Our 2.2-5 male connector PE45827 datasheet specifications and drawing with dimensions are shown below in this PDF. Pasternack's broad catalog of RF, microwave and millimeter wave connectors allows designers to configure and customize their signal connections however they like. Whether the need is to provide an I/O for a board design, or simply create a custom cable assembly configuration, Pasternack has the right connector for the job. Pasternack can also expertly build your custom cable assemblies for you and ship same-day.

Electrical Specifications

Description	Minimum	Typical	Maximum	Units
Frequency Range	DC		6	GHz
Passive Intermodulation			-155	dBc
Dielectric Withstanding Voltage (AC)			750	Vrms

Performance by Frequency

Description	F1	F2	F3	F4	F5	Units
Frequency Range	DC to 3	3 to 6				GHz
VSWR, Max	1.15:1	1.25:1				

Click the following link (or enter part number in "SEARCH" on website) to obtain additional part information including price, inventory and certifications: 2.2-5 Male Low PIM Connector Solder Attachment for PE-SR402FL, PE-SR402FLJ, RG402, PE-SR402AL PE45827

Pasternack Enterprises, Inc. • P.O. Box 16759, Irvine, CA 92623
Phone: (866) 727-8376 or (949) 261-1920 • **Fax:** (949) 261-7451
Sales@Pasternack.com • Techsupport@Pasternack.com

© 2020 Pasternack Enterprises All Rights Reserved

PASTERNACK
an INFINITE brand

2.2-5 Male Low PIM Connector Solder Attachment for PE-SR402FL, PE-SR402FLJ, RG402, PE-SR402AL

RF Connectors
Technical Data Sheet

PE45827

Mechanical Specifications

Size

Length	0.79 in [20.07 mm]
Width/Dia.	0.69 in [17.53 mm]
Height	0.69 in [17.53 mm]
Weight	0.041 lbs [18.6 g]

Material Specifications

Description	Material	Plating
Contact	Brass	Silver
Insulation	PTFE	
Body	Brass	Tri-Metal
Coupling Nut	Brass	Tri-Metal
O-Ring	Silicone Rubber	

Environmental Specifications

Temperature

Operating Range	-40 to +155 deg C

Compliance Certifications (see product page for current document)

Plotted and Other Data

Notes:

Click the following link (or enter part number in “SEARCH” on website) to obtain additional part information including price, inventory and certifications: 2.2-5 Male Low PIM Connector Solder Attachment for PE-SR402FL, PE-SR402FLJ, RG402, PE-SR402AL PE45827

Pasternack Enterprises, Inc. • P.O. Box 16759, Irvine, CA 92623
Phone: (866) 727-8376 or (949) 261-1920 • **Fax:** (949) 261-7451
Sales@Pasternack.com • Techsupport@Pasternack.com

© 2020 Pasternack Enterprises All Rights Reserved

2.2-5 Male Low PIM Connector Solder Attachment for PE-SR402FL, PE-SR402FLJ, RG402, PE-SR402AL

RF Connectors
Technical Data Sheet

PE45827

2.2-5 Male Low PIM Connector Solder Attachment for PE-SR402FL, PE-SR402FLJ, RG402, PE-SR402AL from Pasternack Enterprises has same day shipment for domestic and International orders. Our RF, microwave and millimeter wave products maintain a 99.4% availability and are part of the broadest selection in the industry.

Click the following link (or enter part number in “SEARCH” on website) to obtain additional part information including price, inventory and certifications: 2.2-5 Male Low PIM Connector Solder Attachment for PE-SR402FL, PE-SR402FLJ, RG402, PE-SR402AL PE45827

URL: https://www.pasternack.com/2.2-5-male-pe-sr402fl-pe-sr402flj-pe-sr402al-connector-pe45827-p.aspx

The information contained in this document is accurate to the best of our knowledge and representative of the part described herein. It may be necessary to make modifications to the part and/or the documentation of the part, in order to implement improvements. Pasternack reserves the right to make such changes as required. Unless otherwise stated, all specifications are nominal. Pasternack does not make any representation or warranty regarding the suitability of the part described herein for any particular purpose, and Pasternack does not assume any liability arising out of the use of any part or documentation.

Pasternack Enterprises, Inc. • P.O. Box 16759, Irvine, CA 92623
Phone: (866) 727-8376 or (949) 261-1920 • **Fax:** (949) 261-7451
Sales@Pasternack.com • Techsupport@Pasternack.com

© 2020 Pasternack Enterprises All Rights Reserved

PE45827 CAD Drawing

2.2-5 Male Low PIM Connector Solder Attachment for PE-SR402FL, PE-SR402FLJ, RG402, PE-SR402AL

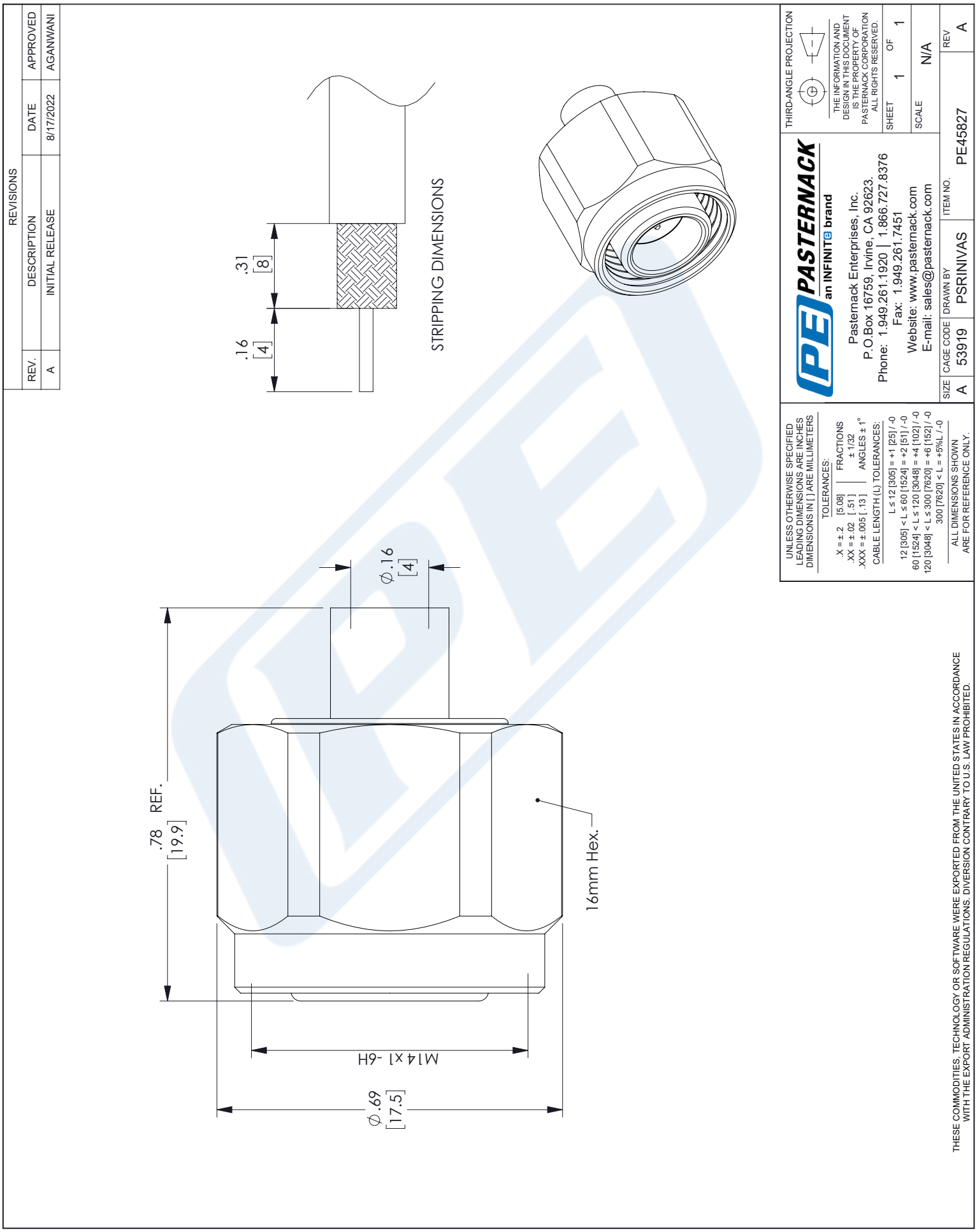

© 2020 Pasternack Enterprises All Rights Reserved

PASTERNACK®
THE ENGINEER'S RF SOURCE

N Male Connector Clamp/Solder Attachment For PE-SR402AL, PE-SR402FL, RG402

TECHNICAL DATA SHEET PE4006

Configuration

Connector	N Male
Connector Interface Type	PE-SR402AL,PE-SR402FL,RG402
Attachment Method (Shield/Contact)	Clamp/Solder
Body Style	Straight

Electrical Specifications

Frequency Range, GHz	DC to 4
Impedance, Ohms	50
Maximum VSWR	1.5:1

Mechanical Specifications

Size

Length, in [mm]	1.36 [34.54]
Width/Dia., in [mm]	0.8 [20.32]
Weight, lbs [g]	0.082 [37.19]

Connector

Type	N Male
Contact Material and Plating	Brass, Gold
Contact Plating Specification	30µ in. minimum
Coupling Nut Material and Plating	Brass, Nickel
Coupling Nut Plating Specification	100µ in. minimum
Body Material and Plating	Brass, Nickel
Body Plating Specification	100µ in. minimum
Dielectric Type	Teflon

Compliance Certifications (visit www.Pasternack.com for current document)

RoHS Compliant

Click the following link (or enter part number in "SEARCH" on website) to obtain additional part information including price, inventory and certifications: N Male Connector Clamp/Solder Attachment For PE-SR402AL, PE-SR402FL, RG402 PE4006

Pasternack Enterprises, Inc. • P.O. Box 16759, Irvine, CA 92623
Phone: (866) 727-8376 or (949) 261-1920 • **Fax:** (949) 261-7451
Sales@Pasternack.com • Techsupport@Pasternack.com

© 2014 Pasternack Enterprises All Rights Reserved

N Male Connector Clamp/Solder Attachment For PE-SR402AL, PE-SR402FL, RG402

Plotted and Other Data

Notes:

- Values at +25 °C, sea level

N Male Connector Clamp/Solder Attachment For PE-SR402AL, PE-SR402FL, RG402 from Pasternack Enterprises has same day shipment for domestic and International orders. Our RF, microwave and millimeter wave products maintain a 99% availability and are part of the broadest selection in the industry.

Click the following link (or enter part number in "SEARCH" on website) to obtain additional part information including price, inventory and certifications: N Male Connector Clamp/Solder Attachment For PE-SR402AL, PE-SR402FL, RG402 PE4006

URL: http://www.pasternack.com/n-male-standard-pe-sr402al-pe-sr402fl-rg402-connector-pe4006-p.aspx

The information contained in this document is accurate to the best of our knowledge and representative of the part described herein. It may be necessary to make modifications to the part and/or the documentation of the part, in order to implement improvements. Pasternack reserves the right to make such changes as required. Unless otherwise stated, all specifications are nominal. Pasternack does not make any representation or warranty regarding the suitability of the part described herein for any particular purpose, and Pasternack does not assume any liability arising out of the use of any part or documentation.

Pasternack Enterprises, Inc. • P.O. Box 16759, Irvine, CA 92623
Phone: (866) 727-8376 or (949) 261-1920 • **Fax:** (949) 261-7451
Sales@Pasternack.com • Techsupport@Pasternack.com

© 2014 Pasternack Enterprises All Rights Reserved

PE4006 CAD Drawing

N Male Connector Clamp/Solder Attachment For PE-SR402AL, PE-SR402FL, RG402

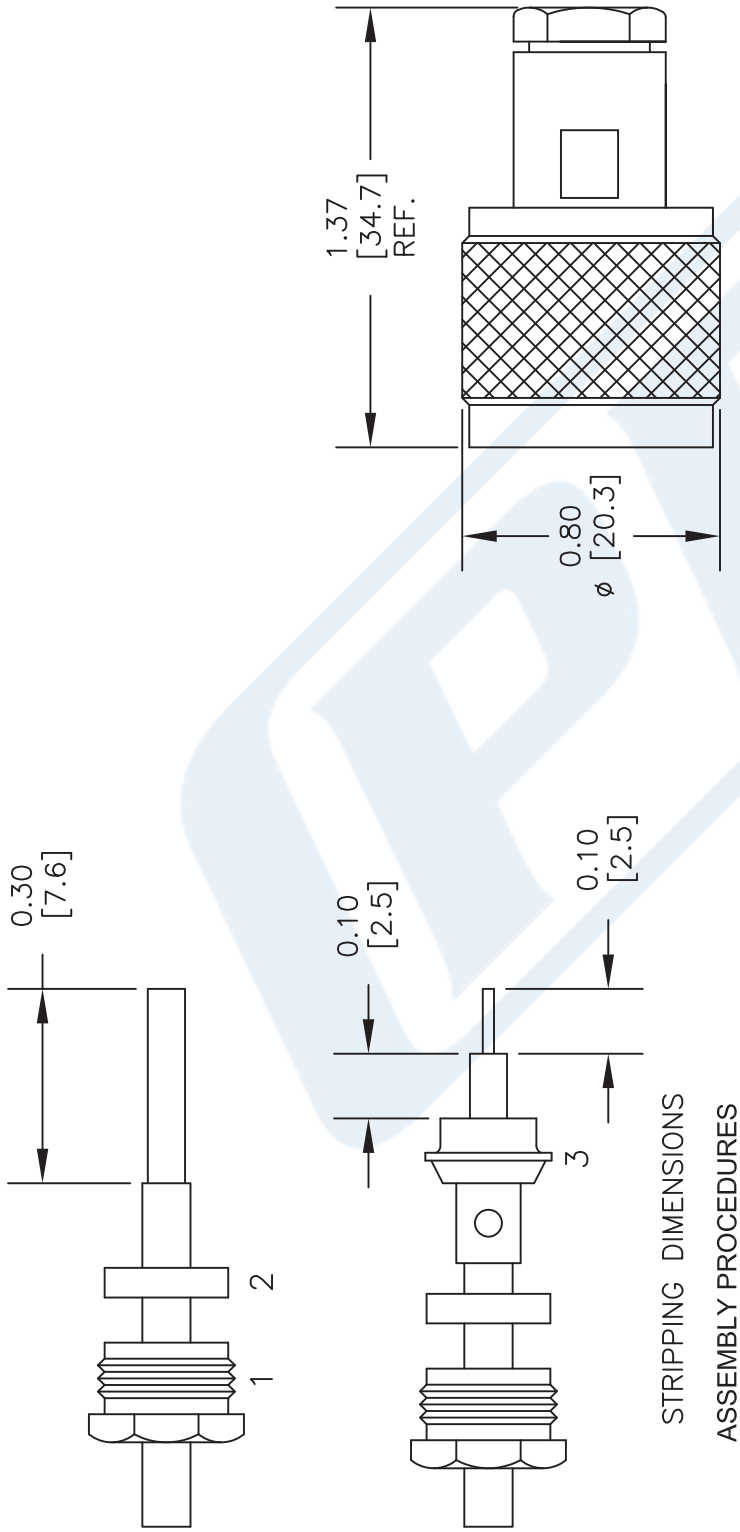

STRIPPING DIMENSIONS

ASSEMBLY PROCEDURES

1. SLIDE CLAMP NUT (1) & GASKET (2) OVER CABLE. STRIP CABLE AS SHOWN IN ASSEMBLY (A). DO NOT CUT DIELECTRIC.
2. SLIDE ADAPTER (3) OVER CABLE UNTIL ADAPTER (3) BOTTOMS ON OUTER CONDUCTOR. SOLDER ADAPTER (3) TO OUTER CONDUCTOR USING MINIMUM HEAT.
3. STRIP CABLE AS SHOWN IN ASSEMBLY (B). SOLDER CONTACT TO CENTER CONDUCTOR. SLIDE ASSEMBLY FORWARD & TIGHTEN TO BODY.

NOTES:
1. UNLESS OTHERWISE SPECIFIED ALL DIMENSIONS ARE NOMINAL.
2. ALL SPECIFICATIONS ARE SUBJECT TO CHANGE WITHOUT NOTICE AT ANY TIME.
3. DIMENSIONS ARE IN INCHES [mm].
4. FITS MIL-C-17 AND EQUIVALENT CABLES.

DWG TITLE
PE4006

FSCM NO. 53919

CAD FILE 042109 | SCALE N/A | SIZE A | 127

PASTERNACK® THE ENGINEER'S RF SOURCE
Pasternack Enterprises, Inc.
P.O. Box 16759 | Irvine | CA | 92623
Phone: (949) 261-1920 | **Fax:** (949) 261-7451
Website: www.pasternack.com | **E-Mail:** sales@pasternack.com

© 2014 Pasternack Enterprises All Rights Reserved

PASTERNACK®
THE ENGINEER'S RF SOURCE

Formable 141 Semirigid Coax Cable with Tinned Braid Outer Conductor and Black FEP Jacket

RF Cables
Technical Data Sheet

PE-SR402FLJ

Configuration

- Formable Cable

Features

- Dimensionally the same as standard solid outer conductor semi-rigid coax
- Standard semi-rigid connectors can be used
- Cable is hand formable and does not require special tools to bend
- Connectors are easily soldered to Tin soaked outer conductor
- Cable can be formed more than once without damage to outer conductor
- High RF Shielding >100 dB

Description

Formable semi-rigid coax is a hand formable version of standard semi-rigid that does not require complicated and costly pre-formed cable assemblies. Because the dimensions and electrical characteristics are so closely matched to semi-rigid coax, standard semi-rigid connectors can be used. The tin soaked copper braid outer shield provides excellent RF shielding. FEP Jacket reduces the chance of shorting exposed contacts or circuit conductors.

Electrical Specifications

Description	Minimum	Typical	Maximum	Units
Frequency Range	DC		34	GHz
Impedance		50		Ohms
Velocity of Propagation		70		%
Time Delay		1.43 4.69		ns/ft ns/m
Shielding Effectiveness	100			dB
Operating Voltage (AC)			1,900	Vrms
Dielectric Withstanding Voltage (AC)			3,000	Vrms
Inner Conductor DC Resistance			8.23	Ohms/1000ft
Nominal Capacitance		29 [95.14]		pF/ft [pF/m]
Insulation Resistance	1,524			MOhms/1000ft

Performance by Frequency Band

Description	F1	F2	F3	F4	F5	Units
Frequency	0.5	1	5	10	20	GHz
Attenuation, Typ	8.23	12.5	32	48.158	73.152	dB/100ft
	27	41.01	104.99	158	240	dB/100m
Input Power (CW), Max	436.5	303.4	126.7	85.5	56.6	Watts

Click the following link (or enter part number in "SEARCH" on website) to obtain additional part information including price, inventory and certifications: Formable PE-SR402FLJ Coax Cable with Tinned Copper Braid Outer Conductor and Black FEP Jacket PE-SR402FLJ

Pasternack Enterprises, Inc. • P.O. Box 16759, Irvine, CA 92623
Phone: (866) 727-8376 or (949) 261-1920 • **Fax:** (949) 261-7451
Sales@Pasternack.com • Techsupport@Pasternack.com

© 2018 Pasternack Enterprises All Rights Reserved

Formable 141 Semirigid Coax Cable with Tinned Braid Outer Conductor and Black FEP Jacket

RF Cables
Technical Data Sheet

PE-SR402FLJ

Mechanical Specifications

Diameter	0.161 in [4.09 mm]
Weight	0.032 lbs/ft [0.05 Kg/m]
Min. Bend Radius (Installation)	0.315 in [8 mm]
Min. Bend Radius (Repeated)	1.575 in [40.01 mm]

Construction Specifications

Description	Material and Plating	Diameter
Inner Conductor	Copper, Silver1	0.036 in 0.91 mm
Conductor Type	Solid	
Dielectric	PTFE	0.117 in 2.97 mm
Outer Conductor	Tinned Copper Braid	0.139 in 3.53 mm
Jacket	FEP, Black	0.161 in [4.09 mm]

Environmental Specifications

Temperature

Operating Range	-65 to +150 deg C
Storage Range	10 to +35 deg C

Compliance Certifications (see product page for current document)

Plotted and Other Data

Notes:

Formable 141 Semirigid Coax Cable with Tinned Braid Outer Conductor and Black FEP Jacket from Pasternack Enterprises has same day shipment for domestic and International orders. Our RF, microwave and millimeter wave products maintain a 99.4% availability and are part of the broadest selection in the industry.

Click the following link (or enter part number in “SEARCH” on website) to obtain additional part information including price, inventory and certifications: Formable PE-SR402FLJ Coax Cable with Tinned Copper Braid Outer Conductor and Black FEP Jacket PE-SR402FLJ

URL: https://www.pasternack.com/50-ohm-formable-141-semirigid-tinned-braid-outer-conductor-fep-jacket-black-pe-sr402flj-p.aspx

Pasternack Enterprises, Inc. • P.O. Box 16759, Irvine, CA 92623
Phone: (866) 727-8376 or (949) 261-1920 • **Fax:** (949) 261-7451
Sales@Pasternack.com • Techsupport@Pasternack.com

© 2018 Pasternack Enterprises All Rights Reserved

PE-SR402FLJ CAD Drawing

Formable 141 Semirigid Coax Cable with Tinned Braid
Outer Conductor and Black FEP Jacket

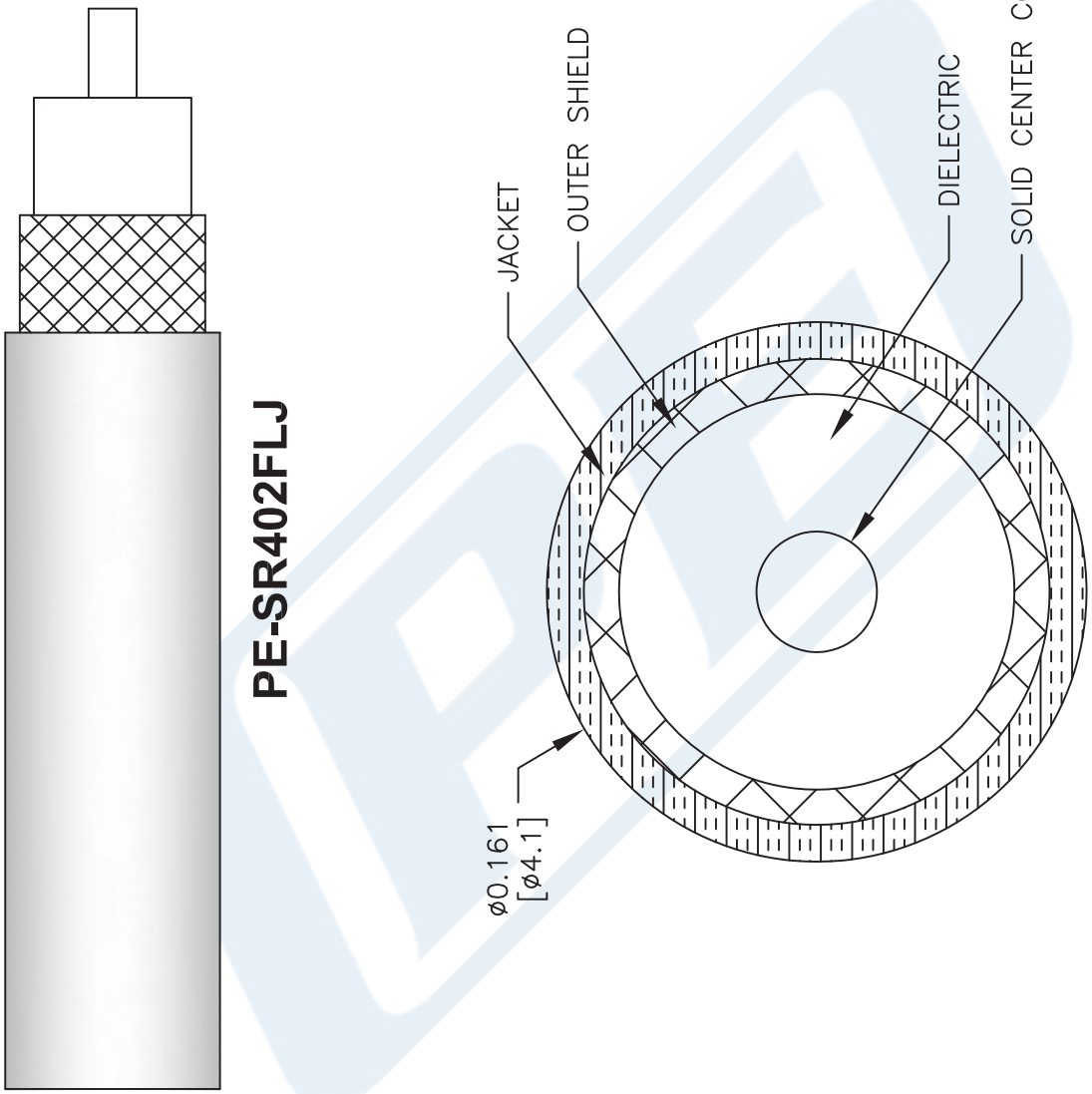

NOTES:
1. UNLESS OTHERWISE SPECIFIED ALL DIMENSIONS ARE NOMINAL.
2. ALL SPECIFICATIONS ARE SUBJECT TO CHANGE WITHOUT NOTICE AT ANY TIME.
3. DIMENSIONS ARE IN INCHES [mm].

DWG TITLE
PE-SR402FLJ

FSCM NO. 53919

CAD FILE 111716 | SCALE N/A | SIZE A | 41742

PASTERNACK®
THE ENGINEER'S RF SOURCE
Pasternack Enterprises, Inc.
P.O. Box 16759 | Irvine | CA | 92623
Phone: (949) 261-1920 | **Fax:** (949) 261-7451
Website: www.pasternack.com | **E-Mail:** sales@pasternack.com

© 2018 Pasternack Enterprises All Rights Reserved