PASTERNACK®
THE ENGINEER'S RF SOURCE

SC Male Connector Crimp/Solder Attachment for RG55, RG141, RG142, RG223, RG400

Configuration

- SC Male Connector
- MIL-STD-348
- 50 Ohms
- Straight Body Geometry
- RG55, RG141, RG142, RG223, RG400 Interface Type
- Crimp/Solder Attachment

Features

- Silver Plated Contact
- Contact plating according to QQ-S-365

Applications

- General Purpose Test
- Custom Cable Assemblies

Description

Pasternack's PE4231 SC male connector with crimp/solder attachment for RG55, RG141, RG142, RG223 and RG400 is part of our full line of RF components available for same-day shipping.

Our SC male connector PE4231 datasheet specifications and drawing with dimensions are shown below in this PDF. Pasternack's broad catalog of RF, microwave and millimeter wave connectors allows designers to configure and customize their signal connections however they like. Whether the need is to provide an I/O for a board design, or simply create a custom cable assembly configuration, Pasternack has the right connector for the job. Pasternack can also expertly build your custom cable assemblies for you and ship same-day.

Mechanical Specifications

Size

Length	1.48 in [37.59 mm]
Width/Dia.	0.8 in [20.32 mm]
Weight	0.068 lbs [30.84 g]

Material Specifications

Description	Material	Plating
Contact		Silver QQ-S-365
Insulation	PTFE	
Body	Brass	Nickel QQ-N-290
Coupling Nut	Brass	Nickel QQ-N-290

Click the following link (or enter part number in "SEARCH" on website) to obtain additional part information including price, inventory and certifications: SC Male Connector Crimp/Solder Attachment for RG55, RG141, RG142, RG223, RG400 PE4231

Pasternack Enterprises, Inc. • P.O. Box 16759, Irvine, CA 92623
Phone: (866) 727-8376 or (949) 261-1920 • **Fax:** (949) 261-7451
Sales@Pasternack.com • Techsupport@Pasternack.com

© 2016 Pasternack Enterprises All Rights Reserved

SC Male Connector Crimp/Solder Attachment for RG55, RG141, RG142, RG223, RG400

Environmental Specifications

Temperature

Operating Range	-65 to +165 deg C

Compliance Certifications (see product page for current document)

Plotted and Other Data

Notes:

SC Male Connector Crimp/Solder Attachment for RG55, RG141, RG142, RG223, RG400 from Pasternack Enterprises has same day shipment for domestic and International orders. Our RF, microwave and millimeter wave products maintain a 99% availability and are part of the broadest selection in the industry.

Click the following link (or enter part number in "SEARCH" on website) to obtain additional part information including price, inventory and certifications: SC Male Connector Crimp/Solder Attachment for RG55, RG141, RG142, RG223, RG400 PE4231

URL: https://www.pasternack.com/sc-male-standard-rg55-rg141-rg142-rg223-rg400-connector-pe4231-p.aspx

The information contained in this document is accurate to the best of our knowledge and representative of the part described herein. It may be necessary to make modifications to the part and/or the documentation of the part, in order to implement improvements. Pasternack reserves the right to make such changes as required. Unless otherwise stated, all specifications are nominal. Pasternack does not make any representation or warranty regarding the suitability of the part described herein for any particular purpose, and Pasternack does not assume any liability arising out of the use of any part or documentation.

Pasternack Enterprises, Inc. • P.O. Box 16759, Irvine, CA 92623
Phone: (866) 727-8376 or (949) 261-1920 • **Fax:** (949) 261-7451
Sales@Pasternack.com • Techsupport@Pasternack.com

© 2016 Pasternack Enterprises All Rights Reserved

PE4231 CAD Drawing

SC Male Connector Crimp/Solder Attachment for RG55, RG141, RG142, RG223, RG400

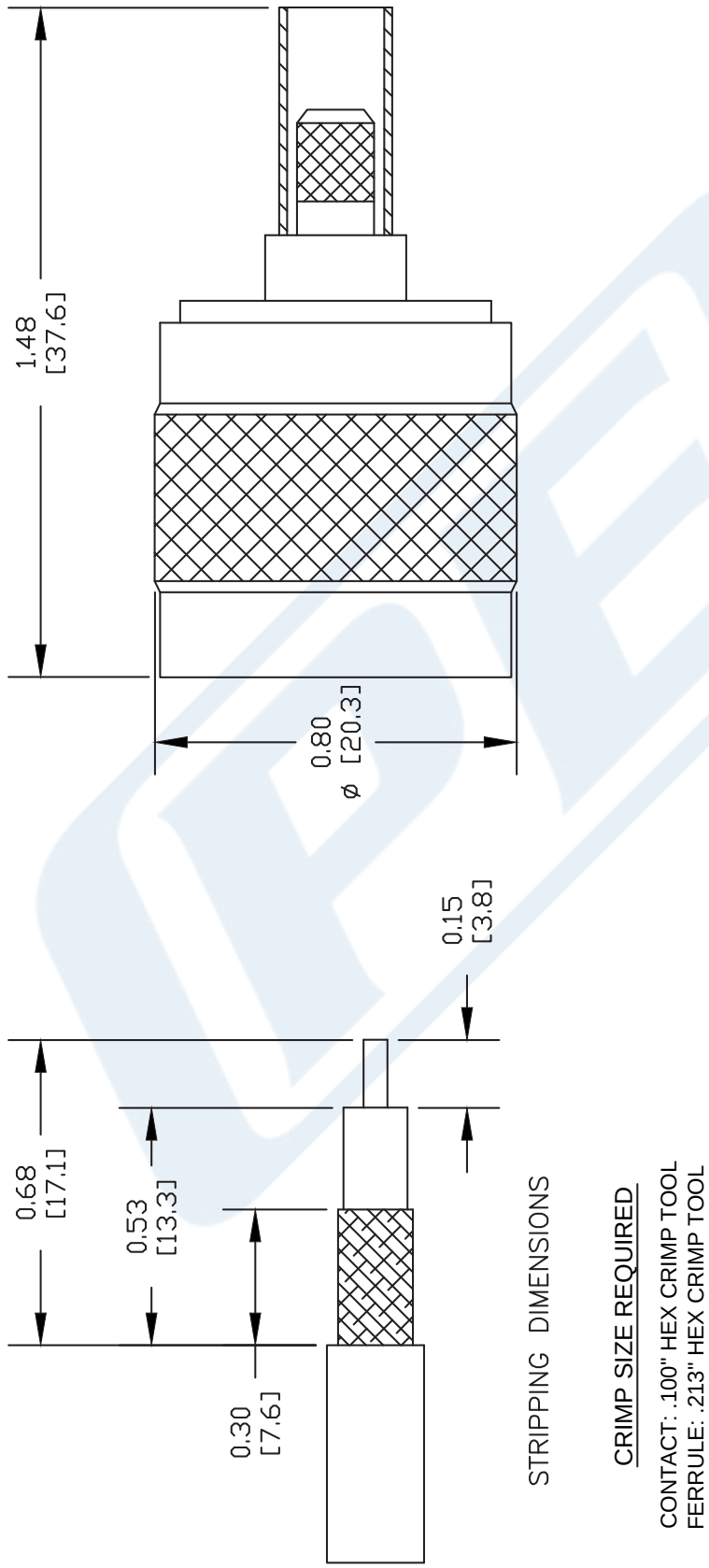

NOTES:
1. UNLESS OTHERWISE SPECIFIED ALL DIMENSIONS ARE NOMINAL.
2. ALL SPECIFICATIONS ARE SUBJECT TO CHANGE WITHOUT NOTICE AT ANY TIME.
3. DIMENSIONS ARE IN INCHES [mm].
4. FITS MIL-C-17 AND EQUIVALENT CABLES.

DWG TITLE
PE4231

REV. -	FSCM NO. 53919	CAD FILE 042309	SCALE N/A	SIZE A	147

PASTERNACK®
Pasternack Enterprises, Inc.
P.O. Box 16759 | Irvine | CA | 92623
Phone: (949) 261-1920 | **Fax:** (949) 261-7451
Website: www.pasternack.com | **E-Mail:** sales@pasternack.com

© 2016 Pasternack Enterprises All Rights Reserved

PASTERNACK
an INFINITE brand

BNC Female Connector Crimp/Solder Attachment for RG55, RG141, RG142, RG223, RG400

RF Connectors
Technical Data Sheet

PE4397

Configuration

- BNC Female Connector
- 50 Ohms
- Straight Body Geometry
- Connector Interface Types: RG55, RG141, RG142, RG223, RG400

Features

- Max. Operating Frequency 4 GHz
- Good VSWR of 1.3:1
- Gold Plated Brass Contact

Applications

- General Purpose Test
- Custom Cable Assemblies

Description

Pasternack's PE4397 BNC female connector with crimp/solder attachment for RG55, RG141, RG142, RG223 and RG400 is part of our full line of RF components available for same-day shipping. Our BNC female connector operates up to a maximum frequency of 4 GHz and offers good VSWR of 1.3:1.

Our BNC female connector PE4397 datasheet specifications and drawing with dimensions are shown below in this PDF. Pasternack's broad catalog of RF, microwave and millimeter wave connectors allows designers to configure and customize their signal connections however they like. Whether the need is to provide an I/O for a board design, or simply create a custom cable assembly configuration, Pasternack has the right connector for the job. Pasternack can also expertly build your custom cable assemblies for you and ship same-day.

Electrical Specifications

Description	Minimum	Typical	Maximum	Units
Frequency Range	DC		4	GHz
VSWR			1.3:1	
Operating Voltage (AC)			500	Vrms
Inner Conductor DC Resistance			1.5	mOhms
Outer Conductor DC Resistance			0.5	mOhms

Mechanical Specifications

Size	
Length	1.24 in [31.5 mm]
Width/Dia.	0.571 in [14.50 mm]
Height	0.5 in [12.7 mm]
Weight	0.027 lbs [12.25 g]
Mating Cycles	500 Cycles

Click the following link (or enter part number in "SEARCH" on website) to obtain additional part information including price, inventory and certifications: BNC Female Connector Crimp/Solder Attachment for RG55, RG141, RG142, RG223, RG400 PE4397

Pasternack Enterprises, Inc. • P.O. Box 16759, Irvine, CA 92623
Phone: (866) 727-8376 or (949) 261-1920 • **Fax:** (949) 261-7451
Sales@Pasternack.com • Techsupport@Pasternack.com

© 2020 Pasternack Enterprises All Rights Reserved

BNC Female Connector Crimp/Solder Attachment for RG55, RG141, RG142, RG223, RG400

Material Specifications

Description	Material	Plating
Contact	Brass	Gold
Insulation	PTFE	
Body	Brass	Nickel

Environmental Specifications

Temperature

Operating Range -65 to +165 deg C

Compliance Certifications (see product page for current document)

Plotted and Other Data

Notes:

BNC Female Connector Crimp/Solder Attachment for RG55, RG141, RG142, RG223, RG400 from Pasternack Enterprises has same day shipment for domestic and International orders. Our RF, microwave and millimeter wave products maintain a 99.4% availability and are part of the broadest selection in the industry.

Click the following link (or enter part number in “SEARCH” on website) to obtain additional part information including price, inventory and certifications: BNC Female Connector Crimp/Solder Attachment for RG55, RG141, RG142, RG223, RG400 PE4397

URL: https://www.pasternack.com/bnc-female-standard-rg55-rg141-rg142-rg223-rg400-connector-pe4397-p.aspx

The information contained in this document is accurate to the best of our knowledge and representative of the part described herein. It may be necessary to make modifications to the part and/or the documentation of the part, in order to implement improvements. Pasternack reserves the right to make such changes as required. Unless otherwise stated, all specifications are nominal. Pasternack does not make any representation or warranty regarding the suitability of the part described herein for any particular purpose, and Pasternack does not assume any liability arising out of the use of any part or documentation.

Pasternack Enterprises, Inc. • P.O. Box 16759, Irvine, CA 92623
Phone: (866) 727-8376 or (949) 261-1920 • **Fax:** (949) 261-7451
Sales@Pasternack.com • Techsupport@Pasternack.com

© 2020 Pasternack Enterprises All Rights Reserved

PE4397 CAD Drawing

BNC Female Connector Crimp/Solder Attachment for
RG55, RG141, RG142, RG223, RG400

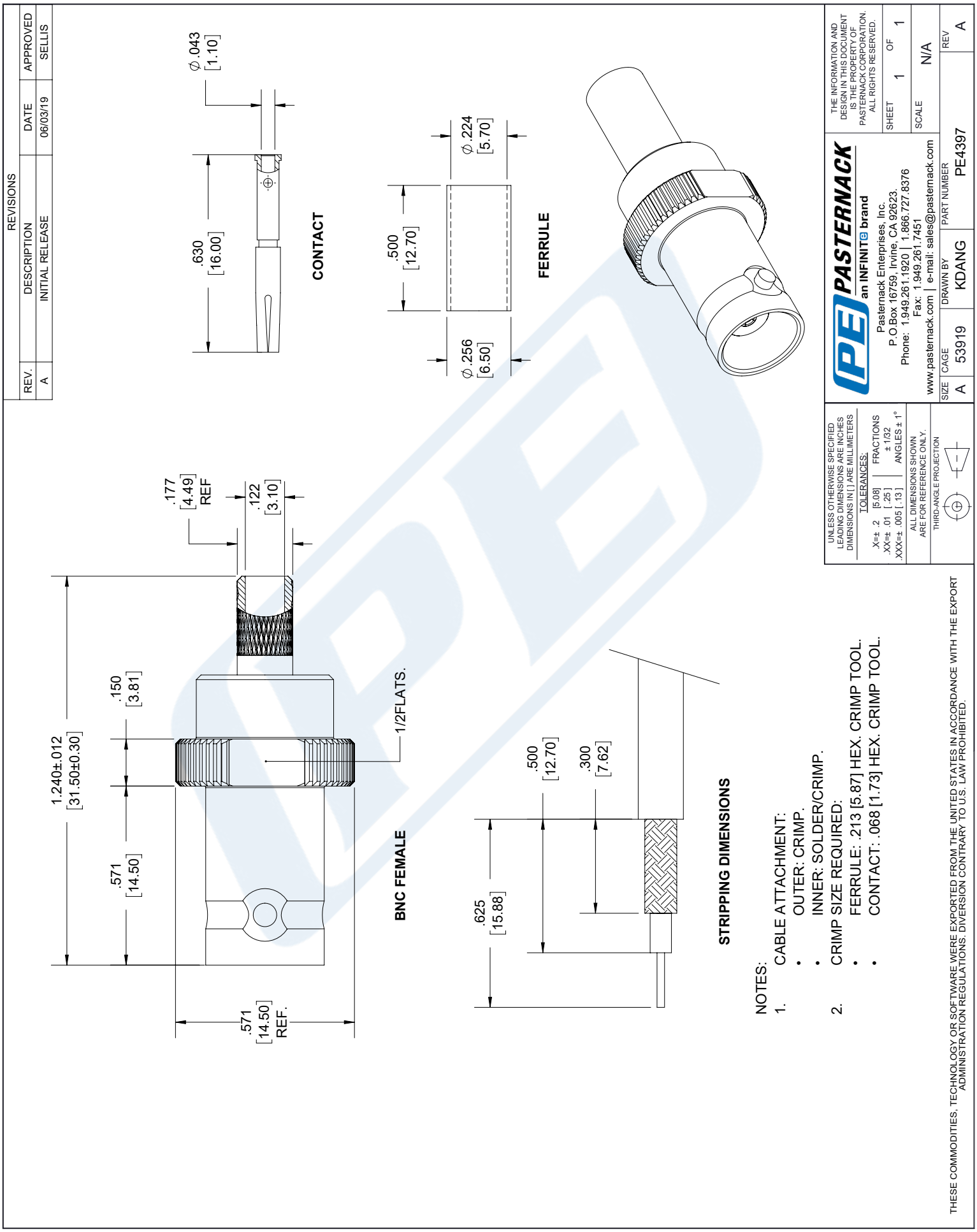

© 2020 Pasternack Enterprises All Rights Reserved

PASTERNACK®
THE ENGINEER'S RF SOURCE

Flexible RG223 Coax Cable Double Shielded with Black PVC Jacket

TECHNICAL DATA SHEET RG223/U

Configuration

Inner Conductor Material and Plating	Copper, Silver
Dielectric Type	PE
Shield Materials	Silver Plated Copper Braid, Silver Plated Copper Braid
Jacket Material and Color	PVC, Black

Electrical Specifications

Impedance, Ohms	50
Velocity of Propagation, %	66
Maximum Operating Frequency, GHz	12.4
Capacitance, pF/ft [pF/m]	30.8 [101.05]
Maximum Operating Voltage, Volts	1,900

Electrical Specifications by Frequency

Frequency 1	
Frequency, MHz	100
Attenuation, dB/100ft [dB/100m]	4 [13.12]
Frequency 2	
Frequency, MHz	400
Attenuation, dB/100ft [dB/100m]	8.2 [26.9]
Frequency 3	
Frequency, MHz	1000
Attenuation, dB/100ft [dB/100m]	13.4 [43.96]
Frequency 4	
Frequency, GHz	3
Attenuation, dB/100ft [dB/100m]	24.8 [81.36]
Frequency 5	
Frequency, GHz	5
Attenuation, dB/100ft [dB/100m]	33.5 [109.91]
Frequency 6	
Frequency, GHz	11
Attenuation, dB/100ft [dB/100m]	54.1 [177.49]

Mechanical Specifications

Temperature	
Operating Range, deg C	-20 to +80

Click the following link (or enter part number in "SEARCH" on website) to obtain additional part information including price, inventory and certifications: Flexible RG223 Coax Cable Double Shielded with Black PVC Jacket RG223/U

Pasternack Enterprises, Inc. • P.O. Box 16759, Irvine, CA 92623
Phone: (866) 727-8376 or (949) 261-1920 • **Fax:** (949) 261-7451
Sales@Pasternack.com • Techsupport@Pasternack.com

© 2014 Pasternack Enterprises All Rights Reserved

Flexible RG223 Coax Cable Double Shielded with Black PVC Jacket

TECHNICAL DATA SHEET RG223/U

Inner Conductor	
Number of Strands	1
Material	Copper
Plating	Silver
Diameter, in [mm]	0.035 [0.89]
Dielectric:	
Type	PE
Diameter, in [mm]	0.116 [2.95]
Shield:	
Number of	2
Material 1	Silver Plated Copper Braid
Material 2	Silver Plated Copper Braid
Diameter, in [mm]	0.156 [3.96]
Jacket:	
Material	PVC
Diameter, in [mm]	0.21 [5.33]
Color	Black
One Time Minimum Bend Radius, in [mm]	0.21 [5.33]
Repeated Minimum Bend Radius, in [mm]	1 [25.4]
Weight, lbs/ft [Kg/m]	0.038 [0.06]

Compliance Certifications (visit www.Pasternack.com for current document)

RoHS Compliant	
REACH Compliant	06/18/2012

Plotted and Other Data

Notes:

- Values at +25 °C, sea level

Flexible RG223 Coax Cable Double Shielded with Black PVC Jacket from Pasternack Enterprises has same day shipment for domestic and International orders. Our RF, microwave and millimeter wave products maintain a 99% availability and are part of the broadest selection in the industry.

Click the following link (or enter part number in "SEARCH" on website) to obtain additional part information including price, inventory and certifications: Flexible RG223 Coax Cable Double Shielded with Black PVC Jacket RG223/U

URL: http://www.pasternack.com/flexible-0.216-rg223-50-ohm-coax-cable-pvc-jacket-rg223-u-p.aspx

The information contained in this document is accurate to the best of our knowledge and representative of the part described herein. It may be necessary to make modifications to the part and/or the documentation of the part, in order to implement improvements. Pasternack reserves the right to make such changes as required. Unless otherwise stated, all specifications are nominal. Pasternack does not make any representation or warranty regarding the suitability of the part described herein for any particular purpose, and Pasternack does not assume any liability arising out of the use of any part or documentation.

Pasternack Enterprises, Inc. • P.O. Box 16759, Irvine, CA 92623
Phone: (866) 727-8376 or (949) 261-1920 • **Fax:** (949) 261-7451
Sales@Pasternack.com • Techsupport@Pasternack.com

© 2014 Pasternack Enterprises All Rights Reserved

RG223/U CAD Drawing

Flexible RG223 Coax Cable Double Shielded with Black PVC Jacket

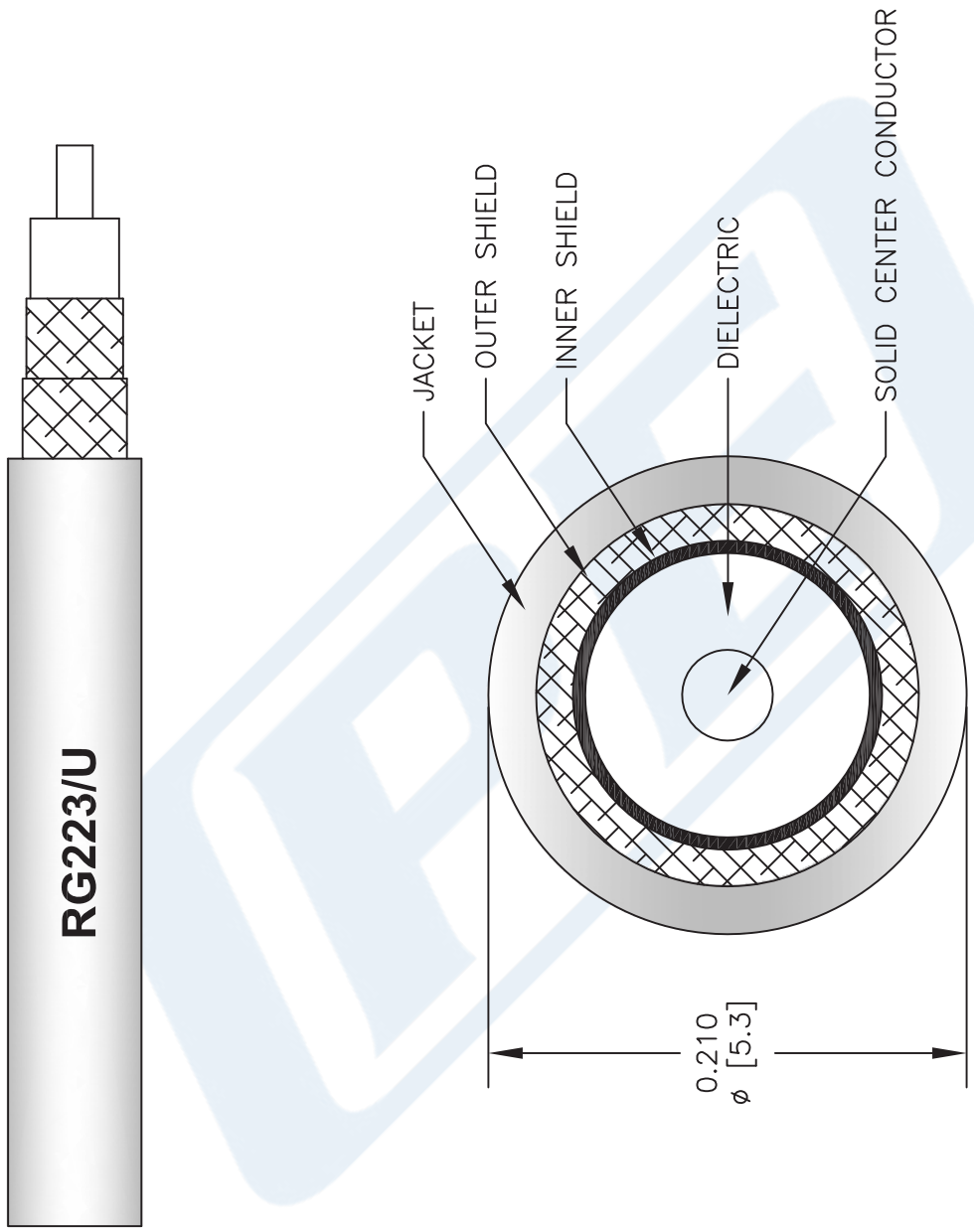

NOTES:
1. UNLESS OTHERWISE SPECIFIED ALL DIMENSIONS ARE NOMINAL.
2. ALL SPECIFICATIONS ARE SUBJECT TO CHANGE WITHOUT NOTICE AT ANY TIME.
3. DIMENSIONS ARE IN INCHES [mm].

DWG TITLE
RG223/U

FSCM NO. 53919

CAD FILE 060508-B | SCALE N/A | SIZE A | 2233

PASTERNACK®
Pasternack Enterprises, Inc.
P.O. Box 16759 | Irvine | CA | 92623
Phone: (949) 261-1920 | **Fax:** (949) 261-7451
Website: www.pasternack.com | **E-Mail:** sales@pasternack.com

© 2014 Pasternack Enterprises All Rights Reserved