PASTERNACK®
THE ENGINEER'S RF SOURCE

C Male Connector Crimp/Solder Attachment for RG55, RG141, RG142, RG223, RG400

Configuration

- C Male Connector
- MIL-STD-348A
- 50 Ohms
- Straight Body Geometry
- RG55, RG141, RG142, RG223, RG400 Interface Type
- Crimp/Solder Attachment

Features

- Max. Operating Frequency 6 GHz
- Good VSWR of 1.45:1
- Silver Plated Brass Contact
- 200 µin minimum contact plating

Applications

- General Purpose Test
- Custom Cable Assemblies

Description

Pasternack's PE4445 type C male connector with crimp/solder attachment for RG55, RG141, RG142, RG223 and RG400 is part of our full line of RF components available for same-day shipping. Our type C male connector operates up to a maximum frequency of 6 GHz and offers good VSWR of 1.45:1.

Our type C male connector PE4445 datasheet specifications and drawing with dimensions are shown below in this PDF. Pasternack's broad catalog of RF, microwave and millimeter wave connectors allows designers to configure and customize their signal connections however they like. Whether the need is to provide an I/O for a board design, or simply create a custom cable assembly configuration, Pasternack has the right connector for the job. Pasternack can also expertly build your custom cable assemblies for you and ship same-day.

Electrical Specifications

Description	Minimum	Typical	Maximum	Units
Frequency Range	DC		6	GHz
VSWR			1.45:1	
Operating Voltage (AC)			1,000	Vrms

Mechanical Specifications

Size

Length	1.4 in [35.56 mm]
Width/Dia.	0.75 in [19.05 mm]
Weight	0.055 lbs [24.95 g]

Click the following link (or enter part number in "SEARCH" on website) to obtain additional part information including price, inventory and certifications: C Male Connector Crimp/Solder Attachment for RG55, RG141, RG142, RG223, RG400 PE4445

Pasternack Enterprises, Inc. • P.O. Box 16759, Irvine, CA 92623
Phone: (866) 727-8376 or (949) 261-1920 • **Fax:** (949) 261-7451
Sales@Pasternack.com • Techsupport@Pasternack.com

© 2016 Pasternack Enterprises All Rights Reserved

C Male Connector Crimp/Solder Attachment for RG55, RG141, RG142, RG223, RG400

Material Specifications

Description	Material	Plating
Contact	Brass	Silver 200 µin minimum
Insulation	PTFE	
Body	Brass	Nickel 100 µin minimum
Coupling Nut	Brass	Nickel 100 µin minimum

Environmental Specifications

Temperature

Operating Range -65 to +165 deg C

Compliance Certifications (see product page for current document)

Plotted and Other Data

Notes:

C Male Connector Crimp/Solder Attachment for RG55, RG141, RG142, RG223, RG400 from Pasternack Enterprises has same day shipment for domestic and International orders. Our RF, microwave and millimeter wave products maintain a 99% availability and are part of the broadest selection in the industry.

Click the following link (or enter part number in "SEARCH" on website) to obtain additional part information including price, inventory and certifications: C Male Connector Crimp/Solder Attachment for RG55, RG141, RG142, RG223, RG400 PE4445

URL: https://www.pasternack.com/c-male-standard-rg55-rg141-rg142-rg223-rg400-connector-pe4445-p.aspx

The information contained in this document is accurate to the best of our knowledge and representative of the part described herein. It may be necessary to make modifications to the part and/or the documentation of the part, in order to implement improvements. Pasternack reserves the right to make such changes as required. Unless otherwise stated, all specifications are nominal. Pasternack does not make any representation or warranty regarding the suitability of the part described herein for any particular purpose, and Pasternack does not assume any liability arising out of the use of any part or documentation.

Pasternack Enterprises, Inc. • P.O. Box 16759, Irvine, CA 92623
Phone: (866) 727-8376 or (949) 261-1920 • **Fax:** (949) 261-7451
Sales@Pasternack.com • Techsupport@Pasternack.com

© 2016 Pasternack Enterprises All Rights Reserved

PE4445 CAD Drawing

C Male Connector Crimp/Solder Attachment for RG55, RG141, RG142, RG223, RG400

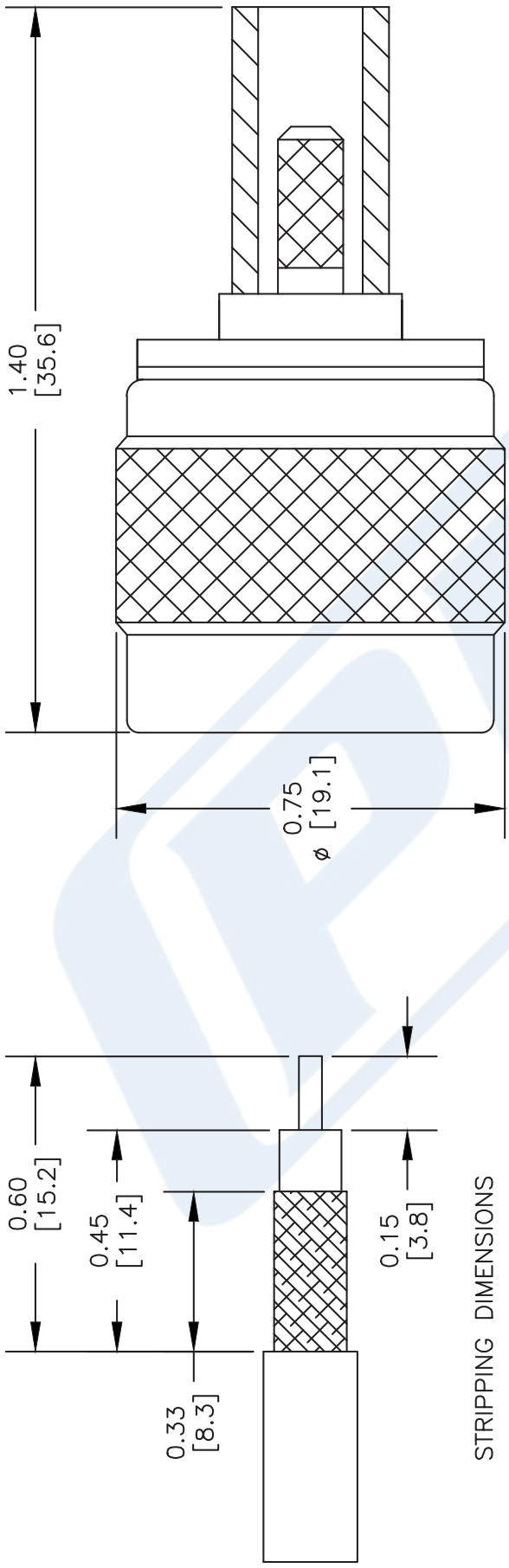

STRIPPING DIMENSIONS

CRIMP SIZE REQUIRED

CONTACT: .100 HEX CRIMP TOOL
FERRULE: .213" HEX CRIMP TOOL

NOTES:
1. UNLESS OTHERWISE SPECIFIED ALL DIMENSIONS ARE NOMINAL.
2. ALL SPECIFICATIONS ARE SUBJECT TO CHANGE WITHOUT NOTICE AT ANY TIME.
3. DIMENSIONS ARE IN INCHES [mm].
4. FITS MIL-C-17 AND EQUIVALENT CABLES.

DWG TITLE **PE4445**

REV. - | FSCM NO. 53919 | CAD FILE 060302 | SCALE N/A | SIZE A | 2233

PASTERNACK®
Pasternack Enterprises, Inc.
P.O. Box 16759 | Irvine | CA | 92623
Phone: (949) 261-1920 | **Fax:** (949) 261-7451
Website: www.pasternack.com | **E-Mail:** sales@pasternack.com

© 2016 Pasternack Enterprises All Rights Reserved

PASTERNACK
an INFINITE brand

TNC Male Connector Crimp/Crimp Attachment for RG55, RG142, RG223, RG400

RF Connectors
Technical Data Sheet

PE4047

Configuration

- TNC Male Connector
- MIL-STD-348A
- 50 Ohms
- Straight Body Geometry
- Connector Interface Types: RG55, RG142, RG223, RG400

Features

- Max. Operating Frequency 6 GHz
- Good VSWR of 1.5:1
- Gold Plated Brass Contact
- 30 µin minimum contact plating

Applications

- General Purpose Test
- Custom Cable Assemblies

Description

Pasternack's PE4047 TNC male connector with crimp/crimp attachment for RG55, RG142, RG223 and RG400 is part of our full line of RF components available for same-day shipping. Our TNC male connector operates up to a maximum frequency of 6 GHz and offers good VSWR of 1.5:1.

Our TNC male connector PE4047 datasheet specifications and drawing with dimensions are shown below in this PDF. Pasternack's broad catalog of RF, microwave and millimeter wave connectors allows designers to configure and customize their signal connections however they like. Whether the need is to provide an I/O for a board design, or simply create a custom cable assembly configuration, Pasternack has the right connector for the job. Pasternack can also expertly build your custom cable assemblies for you and ship same-day.

Electrical Specifications

Description	Minimum	Typical	Maximum	Units
Frequency Range	DC		6	GHz
VSWR			1.5:1	
Operating Voltage (AC)			500	Vrms

Mechanical Specifications

Size

Length	1.097 in [27.86 mm]
Width/Dia.	0.571 in [14.50 mm]
Weight	0.033 lbs [14.97 g]

Click the following link (or enter part number in "SEARCH" on website) to obtain additional part information including price, inventory and certifications: TNC Male Connector Crimp/Crimp Attachment for RG55, RG142, RG223, RG400 PE4047

Pasternack Enterprises, Inc. • P.O. Box 16759, Irvine, CA 92623
Phone: (866) 727-8376 or (949) 261-1920 • **Fax:** (949) 261-7451
Sales@Pasternack.com • Techsupport@Pasternack.com

© 2020 Pasternack Enterprises All Rights Reserved

TNC Male Connector Crimp/Crimp Attachment for RG55, RG142, RG223, RG400

RF Connectors
Technical Data Sheet

PE4047

Material Specifications

Description	Material	Plating
Contact	Brass	Gold 30 µin minimum
Insulation	PTFE	
Body	Brass	Nickel 100 µin minimum
Coupling Nut	Brass	Nickel 100 µin minimum
Crimp Sleeve	Brass	Nickel

Environmental Specifications

Temperature

Operating Range -65 to +165 deg C

Compliance Certifications (see product page for current document)

Plotted and Other Data

Notes:

TNC Male Connector Crimp/Crimp Attachment for RG55, RG142, RG223, RG400 from Pasternack Enterprises has same day shipment for domestic and International orders. Our RF, microwave and millimeter wave products maintain a 99.4% availability and are part of the broadest selection in the industry.

Click the following link (or enter part number in “SEARCH” on website) to obtain additional part information including price, inventory and certifications: TNC Male Connector Crimp/Crimp Attachment for RG55, RG142, RG223, RG400 PE4047

URL: https://www.pasternack.com/tnc-male-rg55-rg142-rg223-rg400-connector-pe4047-p.aspx

The information contained in this document is accurate to the best of our knowledge and representative of the part described herein. It may be necessary to make modifications to the part and/or the documentation of the part, in order to implement improvements. Pasternack reserves the right to make such changes as required. Unless otherwise stated, all specifications are nominal. Pasternack does not make any representation or warranty regarding the suitability of the part described herein for any particular purpose, and Pasternack does not assume any liability arising out of the use of any part or documentation.

Pasternack Enterprises, Inc. • P.O. Box 16759, Irvine, CA 92623
Phone: (866) 727-8376 or (949) 261-1920 • **Fax:** (949) 261-7451
Sales@Pasternack.com • Techsupport@Pasternack.com

© 2020 Pasternack Enterprises All Rights Reserved

PE4047 CAD Drawing

TNC Male Connector Crimp/Crimp Attachment for RG55, RG142, RG223, RG400

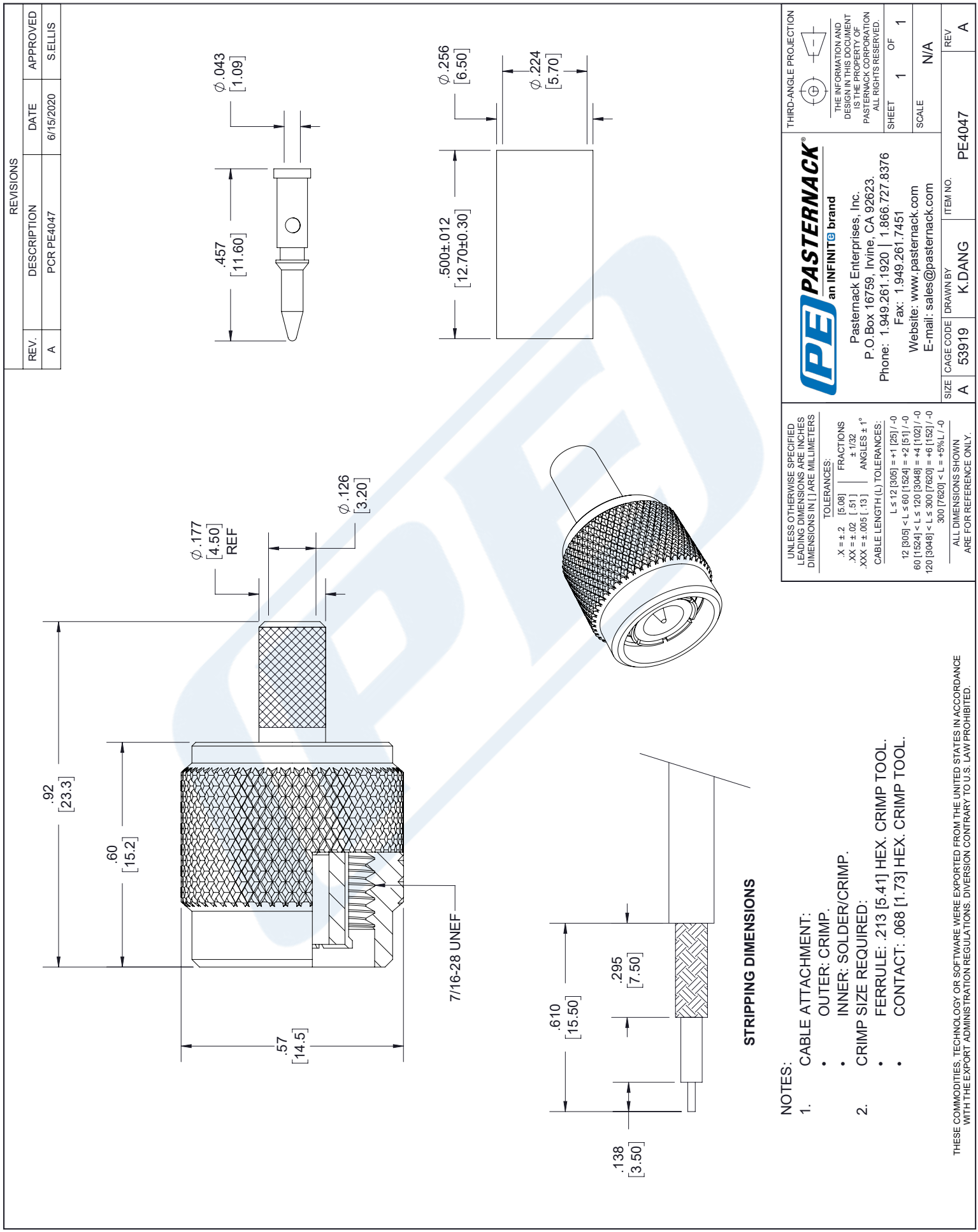

PASTERNACK®
www.pasternack.com

53 Ohm Flexible RG55 Coax Cable Double Shielded with Black PE Jacket

TECHNICAL DATA SHEET RG55B/U

53 Ohm Flexible RG55 Coax Cable Double Shielded with Black PE Jacket

Configuration

Inner Conductor Material and Plating	Copper, Silver
Dielectric Type	PE
Shield Materials	Tinned Copper Braid, Tinned Copper Braid
Jacket Material and Color	PE, Black

Electrical Specifications

Impedance, Ohms	53
Velocity of Propagation, %	66
Maximum Operating Frequency, GHz	3
Capacitance, pF/ft [pF/m]	28.8 [94.49]

Electrical Specifications by Frequency

Frequency 1

Frequency, MHz	10
Attenuation, dB/100ft [dB/100m]	1.35 [4.43]

Frequency 2

Frequency, MHz	100
Attenuation, dB/100ft [dB/100m]	4.3 [14.11]

Frequency 3

Frequency, MHz	1000
Attenuation, dB/100ft [dB/100m]	16.5 [54.13]

Frequency 4

Frequency, GHz	3
Attenuation, dB/100ft [dB/100m]	32 [104.99]

Mechanical Specifications

Inner Conductor

Number of Strands	1
Material	Copper
Plating	Silver
Diameter, in [mm]	0.032 [0.81]

Dielectric:

Type	PE
Diameter, in [mm]	0.116 [2.95]

Click the following link (or enter part number in “SEARCH” on website) to obtain additional part information including price, inventory and certifications: 53 Ohm Flexible RG55 Coax Cable Double Shielded with Black PE Jacket RG55B/U

The information contained in this document is accurate to the best of our knowledge and representative of the part described herein. It may be necessary to make modifications to the part and/or the documentation of the part, in order to implement improvements. Pasternack reserves the right to make such changes as required. Unless otherwise stated, all specifications are nominal.

Pasternack Enterprises, Inc. • P.O. Box 16759, Irvine, CA 92623
Phone: (866) 727-8376 or (949) 261-1920 • **Fax:** (949) 261-7451
Sales@Pasternack.com • Techsupport@Pasternack.com

© 2013 Pasternack Enterprises All Rights Reserved

53 Ohm Flexible RG55 Coax Cable Double Shielded with Black PE Jacket

Shield:	
Number of	2
Material 1	Tinned Copper Braid
Material 2	Tinned Copper Braid
Jacket:	
Material	PE
Diameter, in [mm]	0.202 [5.13]
Color	Black
Weight, lbs/ft [Kg/m]	0.035 [0.05]

Compliance Certifications (visit www.Pasternack.com for current document)

Plotted and Other Data

Notes:	Values at 25 °C, sea level

53 Ohm Flexible RG55 Coax Cable Double Shielded with Black PE Jacket from Pasternack Enterprises has same day shipment for domestic and International orders. Our RF, microwave and fiber optic products maintain a 99% availability and are part of the broadest selection in the industry.

Click the following link (or enter part number in “SEARCH” on website) to obtain additional part information including price, inventory and certifications: 53 Ohm Flexible RG55 Coax Cable Double Shielded with Black PE Jacket RG55B/U

URL: http://www.pasternack.com/flexible-0.206-rg55-53.5-ohm-coax-cable-pe-jacket-rg55b-u-p.aspx

The information contained in this document is accurate to the best of our knowledge and representative of the part described herein. It may be necessary to make modifications to the part and/or the documentation of the part, in order to implement improvements. Pasternack reserves the right to make such changes as required. Unless otherwise stated, all specifications are nominal.

Pasternack Enterprises, Inc. • P.O. Box 16759, Irvine, CA 92623
Phone: (866) 727-8376 or (949) 261-1920 • **Fax:** (949) 261-7451
Sales@Pasternack.com • Techsupport@Pasternack.com

© 2013 Pasternack Enterprises All Rights Reserved

RG55B/U CAD Drawing

53 Ohm Flexible RG55 Coax Cable Double Shielded with Black PE Jacket

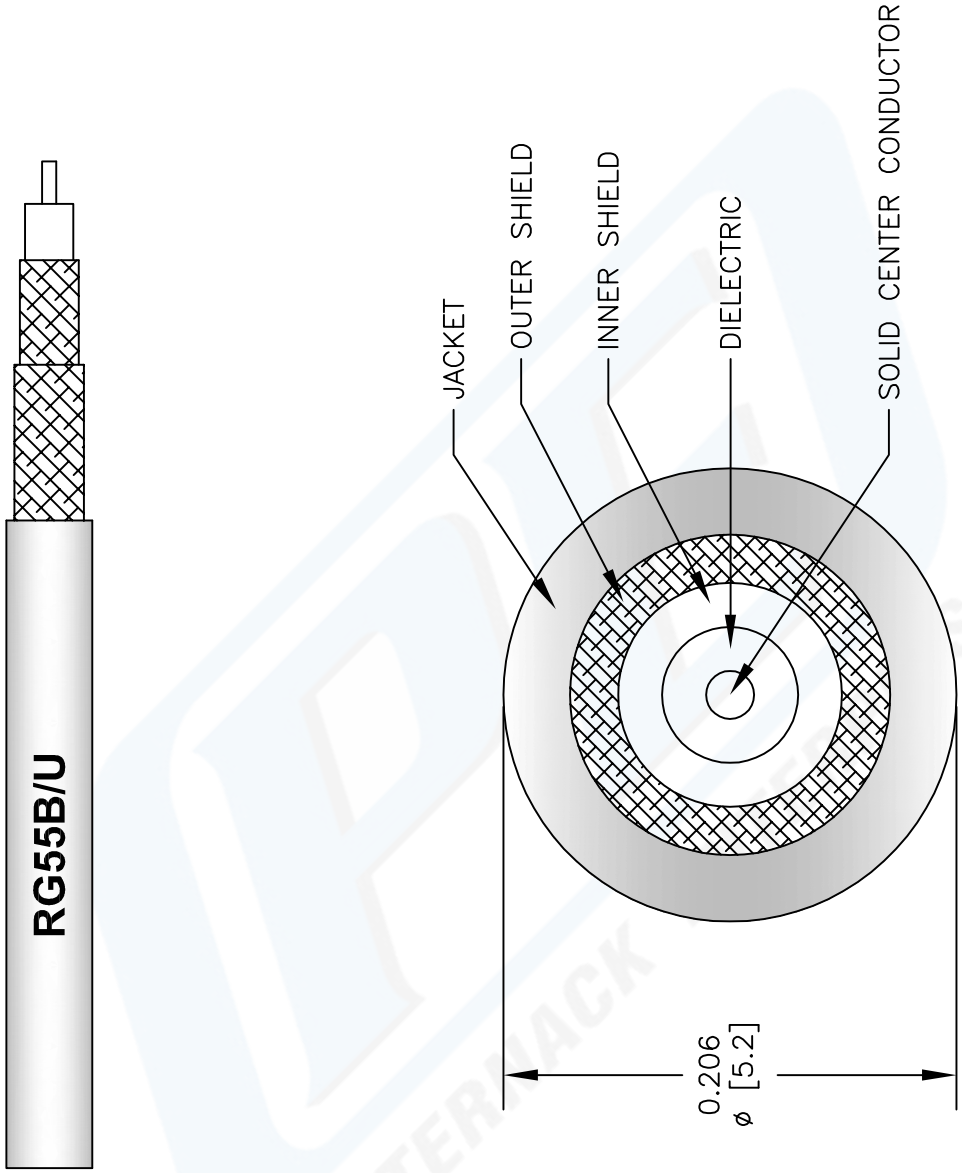

NOTES:
1. UNLESS OTHERWISE SPECIFIED ALL DIMENSIONS ARE NOMINAL.
2. ALL SPECIFICATIONS ARE SUBJECT TO CHANGE WITHOUT NOTICE AT ANY TIME.
3. DIMENSIONS ARE IN INCHES [mm].

DWG TITLE
RG55B/U

REV. A | FSCM NO. 53919

CAD FILE 040113-A | SCALE N/A | SIZE A | 147

PASTERNACK®
Pasternack Enterprises, Inc.
P.O. Box 16759 | Irvine | CA | 92623
Phone: (949) 261-1920 | **Fax:** (949) 261-7451
Website: www.pasternack.com | **E-Mail:** sales@pasternack.com

© 2013 Pasternack Enterprises All Rights Reserved