PASTERNACK®
THE ENGINEER'S RF SOURCE

MMBX Plug Right Angle Snap-On Connector Crimp/Solder Attachment for RG316-DS, RG188-DS, with male center contact

Configuration

- Snap-On MMBX Plug Connector
- 50 Ohms
- Right Angle Body Geometry
- RG316-DS, RG188-DS Interface Type
- Crimp/Solder Attachment

Features

- Max. Operating Frequency 3 GHz
- Excellent VSWR of 1.2:1
- Gold Plated Beryllium Copper Contact
- Reliable Snap-On connection method
- Small circuit footprint for high density applications
- Mechanical misalignment tolerance of 4.5°/0.7mm Max

Applications

- General Purpose Test
- Custom Cable Assemblies
- Low cost blind mate interconnect
- Multi circuit board radios
- Board to board applications requiring multiple coaxial connections

Description

Pasternack's PE45256 MMBX plug right angle snap-on connector crimp/solder attachment for RG316-DS, RG188-DS is part of our full line of RF components available for same-day shipping. Our MMBX plug connector operates up to a maximum frequency of 3 GHz and offers excellent VSWR of 1.2:1. Its right angle body geometry allows for easier connections in tight spaces.

Our MMBX plug right angle connector PE45256 datasheet specifications and drawing with dimensions are shown below in this PDF. Pasternack's broad catalog of RF, microwave and millimeter wave connectors allows designers to configure and customize their signal connections however they like. Whether the need is to provide an I/O for a board design, or simply create a custom cable assembly configuration, Pasternack has the right connector for the job. Pasternack can also expertly build your custom cable connector assemblies for you and ship same-day.

Electrical Specifications

Description	Minimum	Typical	Maximum	Units
Frequency Range	DC		3	GHz
VSWR			1.2:1	
Insertion Loss			0.31	dB
Operating Voltage (DC)			250	Vdc
Dielectric Withstanding Voltage (DC)			750	Vdc
Insulation Resistance	1,000			MOhms

Electrical Specification Notes:
MMBX Plug has a male center contact

Click the following link (or enter part number in "SEARCH" on website) to obtain additional part information including price, inventory and certifications: MMBX Plug Right Angle Snap-On Connector Crimp/Solder Attachment for RG316-DS, RG188-DS, with male center contact PE45256

Pasternack Enterprises, Inc. • P.O. Box 16759, Irvine, CA 92623
Phone: (866) 727-8376 or (949) 261-1920 • **Fax:** (949) 261-7451
Sales@Pasternack.com • Techsupport@Pasternack.com

© 2016 Pasternack Enterprises All Rights Reserved

MMBX Plug Right Angle Snap-On Connector Crimp/Solder Attachment for RG316-DS, RG188-DS, with male center contact

Mechanical Specifications

Size

Length	0.51 in [12.95 mm]
Width/Dia.	0.24 in [6.10 mm]
Weight	0.0071 lbs [3.22 g]
Mating Cycles	100 Cycles

Material Specifications

Description	Material	Plating
Contact	Beryllium Copper	Gold
Insulation	PTFE	
Outer Conductor	Brass	Gold
Body	Brass	Gold

Environmental Specifications

Temperature

Operating Range	-55 to +155 deg C

Click the following link (or enter part number in "SEARCH" on website) to obtain additional part information including price, inventory and certifications: MMBX Plug Right Angle Snap-On Connector Crimp/Solder Attachment for RG316-DS, RG188-DS, with male center contact PE45256

Pasternack Enterprises, Inc. • P.O. Box 16759, Irvine, CA 92623
Phone: (866) 727-8376 or (949) 261-1920 • **Fax:** (949) 261-7451
Sales@Pasternack.com • Techsupport@Pasternack.com

© 2016 Pasternack Enterprises All Rights Reserved

MMBX Plug Right Angle Snap-On Connector Crimp/Solder Attachment for RG316-DS, RG188-DS, with male center contact

Compliance Certifications (see product page for current document)

Plotted and Other Data

Notes:

MMBX Plug Right Angle Snap-On Connector Crimp/Solder Attachment for RG316-DS, RG188-DS, with male center contact from Pasternack Enterprises has same day shipment for domestic and International orders. Our RF, microwave and millimeter wave products maintain a 99% availability and are part of the broadest selection in the industry.

Click the following link (or enter part number in "SEARCH" on website) to obtain additional part information including price, inventory and certifications: MMBX Plug Right Angle Snap-On Connector Crimp/Solder Attachment for RG316-DS, RG188-DS, with male center contact PE45256

URL: https://www.pasternack.com/mmbx-plug-snap-on-rg316-ds-rg188-ds-connector-pe45256-p.aspx

The information contained in this document is accurate to the best of our knowledge and representative of the part described herein. It may be necessary to make modifications to the part and/or the documentation of the part, in order to implement improvements. Pasternack reserves the right to make such changes as required. Unless otherwise stated, all specifications are nominal. Pasternack does not make any representation or warranty regarding the suitability of the part described herein for any particular purpose, and Pasternack does not assume any liability arising out of the use of any part or documentation.

Pasternack Enterprises, Inc. • P.O. Box 16759, Irvine, CA 92623
Phone: (866) 727-8376 or (949) 261-1920 • **Fax:** (949) 261-7451
Sales@Pasternack.com • Techsupport@Pasternack.com

© 2016 Pasternack Enterprises All Rights Reserved

PE45256 CAD Drawing

MMBX Plug Right Angle Snap-On Connector Crimp/Solder Attachment
for RG316-DS, RG188-DS, with male center contact

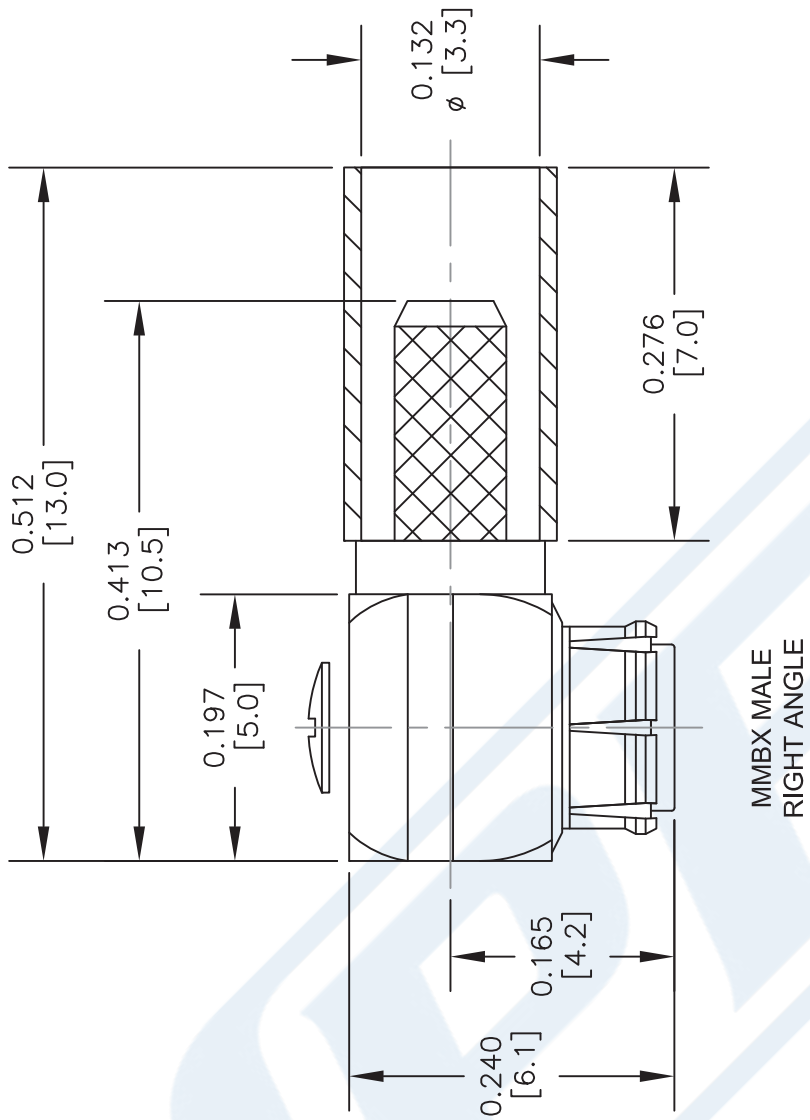

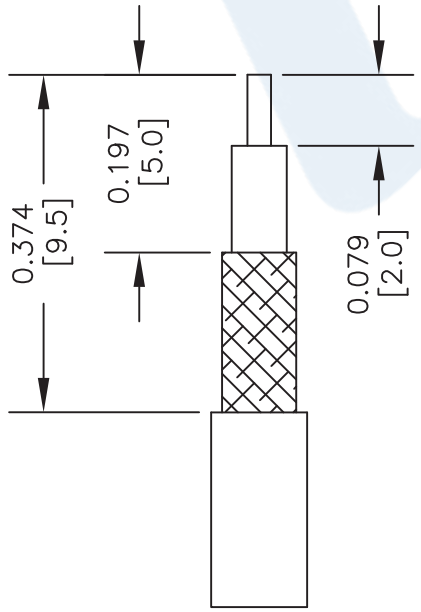

STRIPPING DIMENSIONS

ASSEMBLY PROCEDURES

1. STRIP CABLE AS SHOWN & TIN CENTER CONDUCTOR. SLIDE FERRULE OVER CABLE.
2. INSTALL CABLE INTO BODY OF CONNECTOR & SOLDER CENTER CONDUCTOR IN PLACE.
3. CRIMP FERRULE. INSERT PTFE & PRESS CAP DOWN.

CRIMP SIZE REQUIRED

CONTACT: SOLDER
FERRULE: .128" HEX CRIMP TOOL

STANDARD TOLERANCES	
.X	±0.2
.XX	±0.1
.XXX	±0.05

*STANDARD TOLERANCES APPLY ONLY TO DIMENSIONS IN INCHES

NOTES:
1. UNLESS OTHERWISE SPECIFIED ALL DIMENSIONS ARE NOMINAL.
2. ALL SPECIFICATIONS ARE SUBJECT TO CHANGE WITHOUT NOTICE AT ANY TIME.
3. DIMENSIONS ARE IN INCHES [mm].
4. FITS MIL-C-17 AND EQUIVALENT CABLES.

DWG TITLE
PE45256

FSCM NO. 53919

CAD FILE 092816 | SCALE N/A | SIZE A | 2233

PASTERNACK®
THE ENGINEER'S RF SOURCE
Pasternack Enterprises, Inc.
P.O. Box 16759 | Irvine | CA | 92623
Phone: (949) 261-1920 | **Fax:** (949) 261-7451
Website: www.pasternack.com | **E-Mail:** sales@pasternack.com

© 2016 Pasternack Enterprises All Rights Reserved

PASTERNACK®
THE ENGINEER'S RF SOURCE

MMCX Jack Connector Crimp/Solder Attachment For RG316-DS, RG188-DS

RF Connectors Technical Data Sheet PE44852

Configuration

- MMCX Jack Connector
- 50 Ohms
- Straight Body Geometry
- RG316-DS, RG188-DS Interface Type
- Crimp/Solder Attachment

Features

- Gold Plated Beryllium Copper Contact

Applications

- General Purpose Test
- Custom Cable Assemblies

Description

Pasternack's PE44852 MMCX jack connector with crimp/solder attachment for RG316-DS and RG188-DS is part of our full line of RF components available for same-day shipping.

Our MMCX jack connector PE44852 datasheet specifications and drawing with dimensions are shown below in this PDF. Pasternack's broad catalog of RF, microwave and millimeter wave connectors allows designers to configure and customize their signal connections however they like. Whether the need is to provide an I/O for a board design, or simply create a custom cable assembly configuration, Pasternack has the right connector for the job. Pasternack can also expertly build your custom cable assemblies for you and ship same-day.

Mechanical Specifications

Size

Length	1 in [25.4 mm]
Width/Dia.	0.157 in [3.99 mm]
Weight	0.006 lbs [2.72 g]

Material Specifications

Description	Material	Plating
Contact	Beryllium Copper	Gold
Insulation	PTFE	
Body	Brass	Gold

Click the following link (or enter part number in "SEARCH" on website) to obtain additional part information including price, inventory and certifications: MMCX Jack Connector Crimp/Solder Attachment For RG316-DS, RG188-DS PE44852

Pasternack Enterprises, Inc. • P.O. Box 16759, Irvine, CA 92623
Phone: (866) 727-8376 or (949) 261-1920 • **Fax:** (949) 261-7451
Sales@Pasternack.com • Techsupport@Pasternack.com

© 2017 Pasternack Enterprises All Rights Reserved

MMCX Jack Connector Crimp/Solder Attachment For RG316-DS, RG188-DS

Compliance Certifications (see product page for current document)

Plotted and Other Data

Notes:

MMCX Jack Connector Crimp/Solder Attachment For RG316-DS, RG188-DS from Pasternack Enterprises has same day shipment for domestic and International orders. Our RF, microwave and millimeter wave products maintain a 99% availability and are part of the broadest selection in the industry.

Click the following link (or enter part number in "SEARCH" on website) to obtain additional part information including price, inventory and certifications: MMCX Jack Connector Crimp/Solder Attachment For RG316-DS, RG188-DS PE44852

URL: https://www.pasternack.com/mmcx-jack-standard-rg316-ds-rg188-ds-connector-pe44852-p.aspx

The information contained in this document is accurate to the best of our knowledge and representative of the part described herein. It may be necessary to make modifications to the part and/or the documentation of the part, in order to implement improvements. Pasternack reserves the right to make such changes as required. Unless otherwise stated, all specifications are nominal. Pasternack does not make any representation or warranty regarding the suitability of the part described herein for any particular purpose, and Pasternack does not assume any liability arising out of the use of any part or documentation.

Pasternack Enterprises, Inc. • P.O. Box 16759, Irvine, CA 92623
Phone: (866) 727-8376 or (949) 261-1920 • **Fax:** (949) 261-7451
Sales@Pasternack.com • Techsupport@Pasternack.com

© 2017 Pasternack Enterprises All Rights Reserved

PE44852 CAD Drawing

MMCX Jack Connector Crimp/Solder Attachment For RG316-DS, RG188-DS

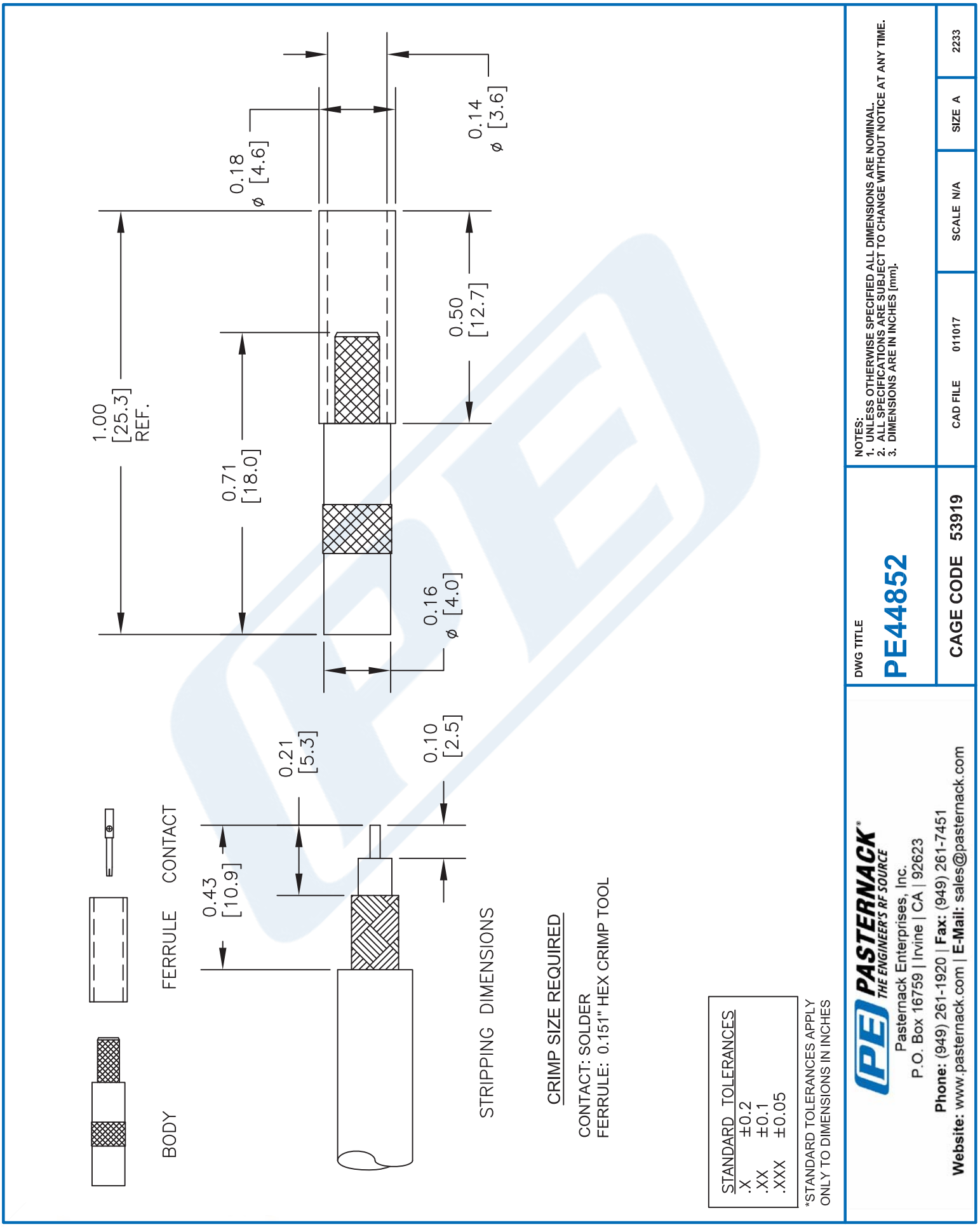

© 2017 Pasternack Enterprises All Rights Reserved

Flexible RG316-DS Coax Cable Double Shielded with Tan FEP Jacket

RF Cables
Technical Data Sheet

RG316-DS

Configuration

- Flexible Cable
- 2 Shield(s)

Electrical Specifications

Description	Minimum	Typical	Maximum	Units
Frequency Range	DC		3	GHz
Impedance		50		Ohms
Velocity of Propagation		69.5		%
Shielding Effectiveness	85			dB
Operating Voltage (AC)			1,200	Vrms
Inner Conductor DC Resistance			83.82	Ohms/1000ft
Outer Conductor DC Resistance			5.33	Ohms/1000ft
Nominal Capacitance		28.96 [95.01]		pF/ft [pF/m]
Insulation Resistance	304.8			MOhms/1000ft

Performance by Frequency Band

Description	F1	F2	F3	F4	F5	Units
Frequency	0.1	0.4	1	2	3	GHz
Attenuation, Max	10.97	20.97	37.95	45.05	57.94	dB/100ft
	35.99	68.8	124.51	147.8	190.09	dB/100m
Attenuation, Typ	8.29	17.5	29	39.41	53.55	dB/100ft
	27.2	57.41	95.14	129.3	175.69	dB/100m
Input Power (CW), Max	375	185	120	85	65	Watts

Mechanical Specifications

Diameter	0.114 in [2.9 mm]
Weight	0.015 lbs/ft [0.02 Kg/m]
Min. Bend Radius (Installation)	0.59 in [14.99 mm]
Min. Bend Radius (Repeated)	1.57 in [39.88 mm]

Click the following link (or enter part number in “SEARCH” on website) to obtain additional part information including price, inventory and certifications: Flexible RG316-DS Coax Cable Double Shielded with Tan FEP Jacket RG316-DS

Pasternack Enterprises, Inc. • P.O. Box 16759, Irvine, CA 92623
Phone: (866) 727-8376 or (949) 261-1920 • **Fax:** (949) 261-7451
Sales@Pasternack.com • Techsupport@Pasternack.com

© 2020 Pasternack Enterprises All Rights Reserved

Flexible RG316-DS Coax Cable Double Shielded with Tan FEP Jacket

Construction Specifications

Description	Material and Plating	Diameter
Inner Conductor	Copper Clad Steel, Silver, 7 Strands	0.02 in 0.51 mm
Conductor Type	Stranded	
Dielectric	PTFE	0.06 in [1.52 mm]
First Shield	Silver Plated Copper Braid	
Second Shield	Silver Plated Copper Braid	0.094 in 2.39 mm
Jacket	FEP, Tan	0.114 in [2.9 mm]

Environmental Specifications

Temperature

Operating Range	-55 to +200 deg C
Storage Range	0 to +40 deg C

Compliance Certifications (see product page for current document)

Plotted and Other Data

Notes:

Flexible RG316-DS Coax Cable Double Shielded with Tan FEP Jacket from Pasternack Enterprises has same day shipment for domestic and International orders. Our RF, microwave and millimeter wave products maintain a 99.4% availability and are part of the broadest selection in the industry.

Click the following link (or enter part number in “SEARCH” on website) to obtain additional part information including price, inventory and certifications: Flexible RG316-DS Coax Cable Double Shielded with Tan FEP Jacket RG316-DS

URL: https://www.pasternack.com/flexible-0.114-rg316-ds-50-ohm-coax-cable-fep-jacket-rg316-ds-p.aspx

The information contained in this document is accurate to the best of our knowledge and representative of the part described herein. It may be necessary to make modifications to the part and/or the documentation of the part, in order to implement improvements. Pasternack reserves the right to make such changes as required. Unless otherwise stated, all specifications are nominal. Pasternack does not make any representation or warranty regarding the suitability of the part described herein for any particular purpose, and Pasternack does not assume any liability arising out of the use of any part or documentation.

Pasternack Enterprises, Inc. • P.O. Box 16759, Irvine, CA 92623
Phone: (866) 727-8376 or (949) 261-1920 • **Fax:** (949) 261-7451
Sales@Pasternack.com • Techsupport@Pasternack.com

© 2020 Pasternack Enterprises All Rights Reserved

RG316-DS CAD Drawing

Flexible RG316-DS Coax Cable Double Shielded with Tan FEP Jacket

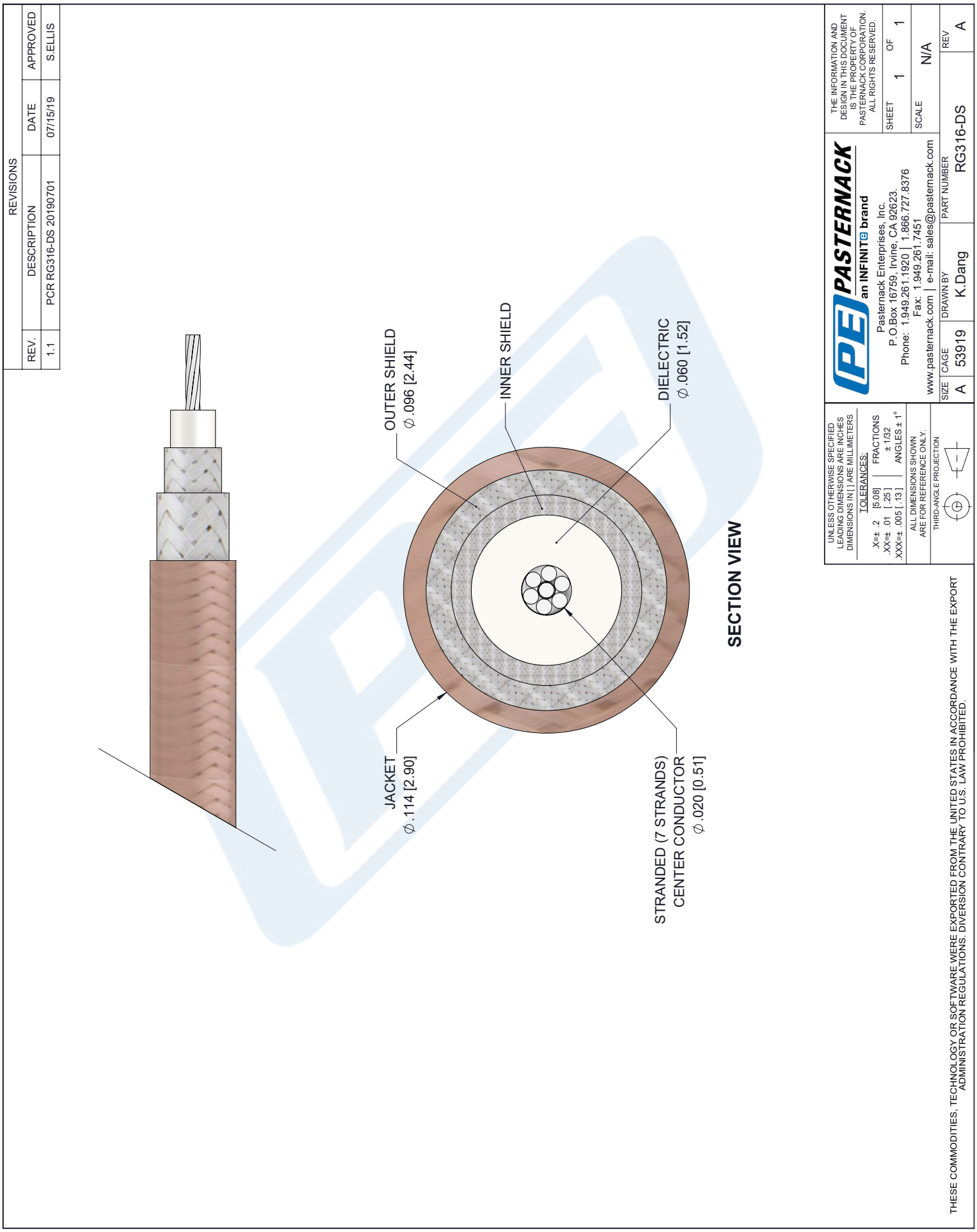

© 2020 Pasternack Enterprises All Rights Reserved