PASTERNACK®
THE ENGINEER'S RF SOURCE

BNC Male Connector Clamp/Solder Attachment for RG174, RG316, RG188, .100 inch, PE-B100, PE-C100, LMR-100

RF Connectors
Technical Data Sheet

PE4084

Configuration

- BNC Male Connector
- MIL-STD-348A
- 50 Ohms
- Straight Body Geometry
- RG174, RG316, RG188, .100 inch, PE-B100, PE-C100, LMR-100 Interface Type
- Clamp/Solder Attachment

Features

- Max. Operating Frequency 4 GHz
- Good VSWR of 1.3:1
- Gold Plated Brass Contact
- 30 µin minimum contact plating

Applications

- General Purpose Test
- Custom Cable Assemblies

Description

Pasternack's PE4084 BNC male connector with clamp/solder attachment for RG174, RG316, RG188, .100 inch, PE-B100, PE-C100 and LMR-100 is part of our full line of RF components available for same-day shipping. Our BNC male connector operates up to a maximum frequency of 4 GHz and offers good VSWR of 1.3:1.

Our BNC male connector PE4084 datasheet specifications and drawing with dimensions are shown below in this PDF. Pasternack's broad catalog of RF, microwave and millimeter wave connectors allows designers to configure and customize their signal connections however they like. Whether the need is to provide an I/O for a board design, or simply create a custom cable assembly configuration, Pasternack has the right connector for the job. Pasternack can also expertly build your custom cable assemblies for you and ship same-day.

Electrical Specifications

Description	Minimum	Typical	Maximum	Units
Frequency Range	DC		4	GHz
VSWR			1.3:1	
Operating Voltage (AC)			500	Vrms
Dielectric Withstanding Voltage (AC)			1,500	Vrms
Inner Conductor DC Resistance			1.5	mOhms
Outer Conductor DC Resistance			0.5	mOhms
Insulation Resistance	5,000			MOhms

Performance by Frequency

Description	F1	F2	F3	F4	F5	Units
Frequency Range	DC to 3					GHz
Insertion Loss, Max	0.2					dB

Click the following link (or enter part number in "SEARCH" on website) to obtain additional part information including price, inventory and certifications: BNC Male Connector Clamp/Solder Attachment for RG174, RG316, RG188, .100 inch, PE-B100, PE-C100, LMR-100 PE4084

Pasternack Enterprises, Inc. • P.O. Box 16759, Irvine, CA 92623
Phone: (866) 727-8376 or (949) 261-1920 • **Fax:** (949) 261-7451
Sales@Pasternack.com • Techsupport@Pasternack.com

© 2018 Pasternack Enterprises All Rights Reserved

BNC Male Connector Clamp/Solder Attachment for RG174, RG316, RG188, .100 inch, PE-B100, PE-C100, LMR-100

Electrical Specification Notes:
RF leakage: 55 dB min at 3 GHz.

Mechanical Specifications

Size

Length	1.09 in [27.69 mm]
Width/Dia.	0.57 in [14.48 mm]
Weight	0.042 lbs [19.05 g]
Mating Cycles	500 Cycles

Material Specifications

Description	Material	Plating
Contact	Brass	Gold 30 µin minimum
Insulation	PTFE	
Body	Brass	Nickel 100 µin minimum
Coupling Nut	Brass	Nickel

Environmental Specifications

Temperature

Operating Range	-65 to +165 deg C
Vibration	MIL-STD-202, Method 204, Condition B
Temperature Cycle	MIL-STD-202, Method 107, Condition B
Salt Spray	MIL-STD-202, Method 101, Condition B

Compliance Certifications (see product page for current document)

Plotted and Other Data

Notes:

Click the following link (or enter part number in "SEARCH" on website) to obtain additional part information including price, inventory and certifications: BNC Male Connector Clamp/Solder Attachment for RG174, RG316, RG188, .100 inch, PE-B100, PE-C100, LMR-100 PE4084

Pasternack Enterprises, Inc. • P.O. Box 16759, Irvine, CA 92623
Phone: (866) 727-8376 or (949) 261-1920 • **Fax:** (949) 261-7451
Sales@Pasternack.com • Techsupport@Pasternack.com

© 2018 Pasternack Enterprises All Rights Reserved

BNC Male Connector Clamp/Solder Attachment for RG174, RG316, RG188, .100 inch, PE-B100, PE-C100, LMR-100

Assembly Instruction

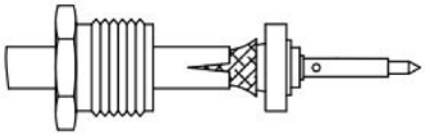

CONTACT ASSEMBLY

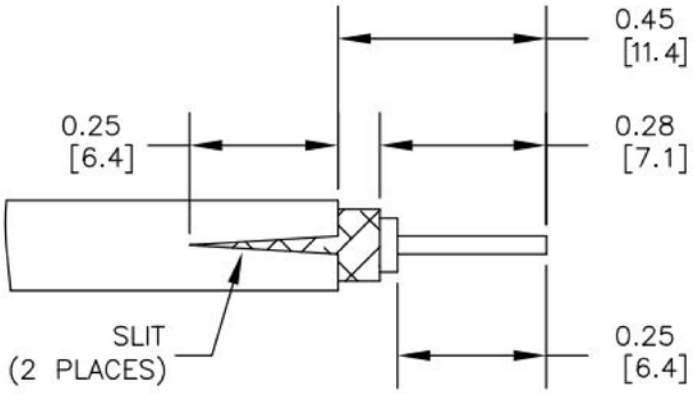

STRIPPING DIMENSION

ASSEMBLY PROCEDURES

1. SLIDE HEX NUT OVER CABLE. STRIP CABLE AS SHOWN.
2. FLARE BRAID AND SLIDE CONTACT ASSEMBLY OVER DIELECTRIC AND UNDER BRAID UNTIL THE CONTACT ASSEMBLY STOPS.
3. TRIM EXCESS BRAID TO DIAMETER OF CONTACT ASSEMBLY. SOLDER CONTACT ONTO CENTER CONDUCTOR.
4. INSERT ASSEMBLY INTO BODY WITH AND TIGHTEN USING 15 IN-LBS MIN. TORQUE WRENCH.

Click the following link (or enter part number in "SEARCH" on website) to obtain additional part information including price, inventory and certifications: BNC Male Connector Clamp/Solder Attachment for RG174, RG316, RG188, .100 inch, PE-B100, PE-C100, LMR-100 PE4084

Pasternack Enterprises, Inc. • P.O. Box 16759, Irvine, CA 92623
Phone: (866) 727-8376 or (949) 261-1920 • **Fax:** (949) 261-7451
Sales@Pasternack.com • Techsupport@Pasternack.com

© 2018 Pasternack Enterprises All Rights Reserved

BNC Male Connector Clamp/Solder Attachment for RG174, RG316, RG188, .100 inch, PE-B100, PE-C100, LMR-100

RF Connectors
Technical Data Sheet

PE4084

BNC Male Connector Clamp/Solder Attachment for RG174, RG316, RG188, .100 inch, PE-B100, PE-C100, LMR-100 from Pasternack Enterprises has same day shipment for domestic and International orders. Our RF, microwave and millimeter wave products maintain a 99.4% availability and are part of the broadest selection in the industry.

Click the following link (or enter part number in “SEARCH” on website) to obtain additional part information including price, inventory and certifications: BNC Male Connector Clamp/Solder Attachment for RG174, RG316, RG188, .100 inch, PE-B100, PE-C100, LMR-100 PE4084

URL: https://www.pasternack.com/bnc-male-standard-rg174-rg316-rg188-connector-pe4084-p.aspx

The information contained in this document is accurate to the best of our knowledge and representative of the part described herein. It may be necessary to make modifications to the part and/or the documentation of the part, in order to implement improvements. Pasternack reserves the right to make such changes as required. Unless otherwise stated, all specifications are nominal. Pasternack does not make any representation or warranty regarding the suitability of the part described herein for any particular purpose, and Pasternack does not assume any liability arising out of the use of any part or documentation.

Pasternack Enterprises, Inc. • P.O. Box 16759, Irvine, CA 92623
Phone: (866) 727-8376 or (949) 261-1920 • **Fax:** (949) 261-7451
Sales@Pasternack.com • Techsupport@Pasternack.com

© 2018 Pasternack Enterprises All Rights Reserved

PE4084 CAD Drawing

BNC Male Connector Clamp/Solder Attachment for RG174, RG316, RG188, .100 inch, PE-B100, PE-C100, LMR-100

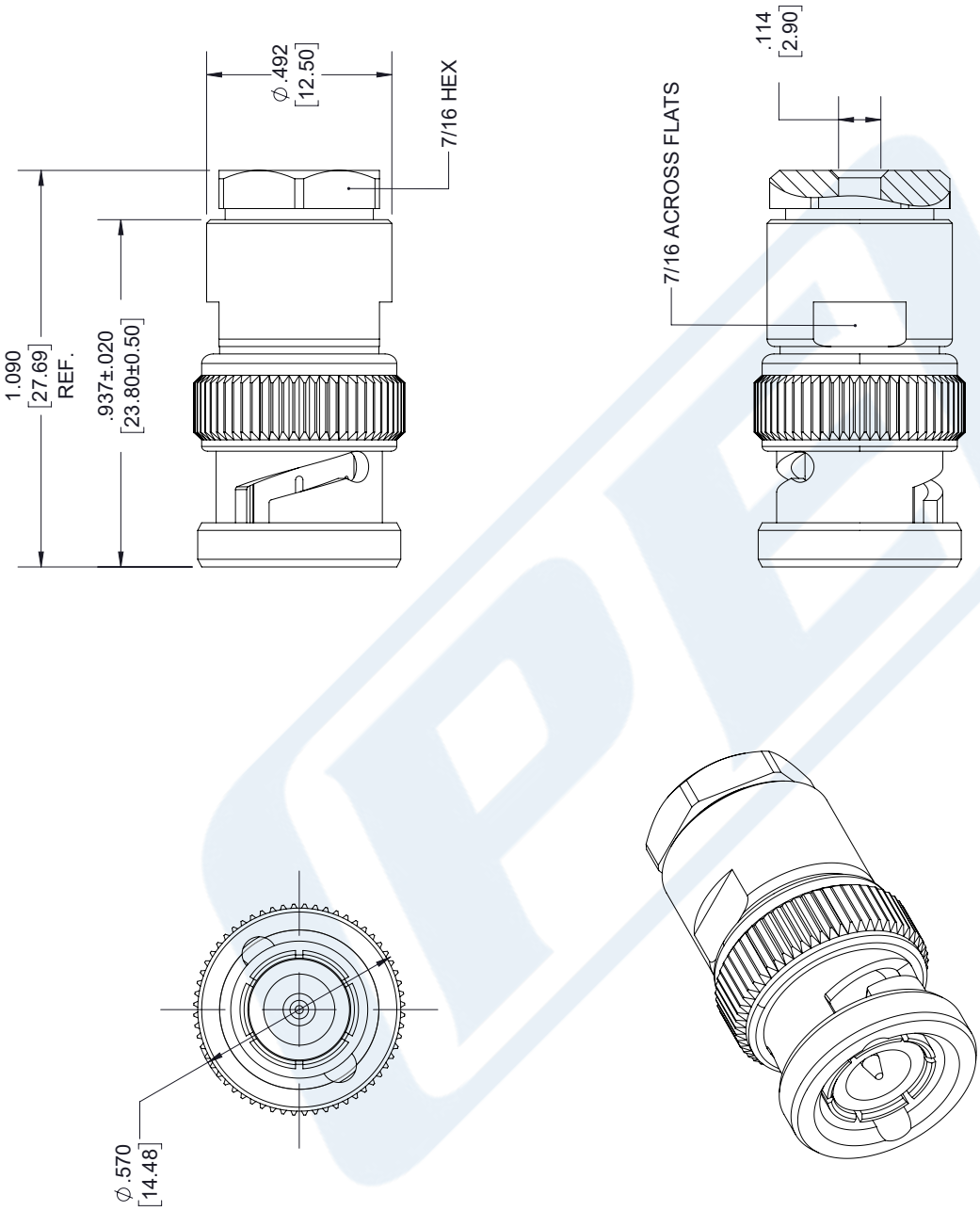

STANDARD TOLERANCES	
.X	±0.2
.XX	±0.01
.XXX	±0.005

*STANDARD TOLERANCES APPLY ONLY TO DIMENSIONS IN INCHES

NOTES:
1. UNLESS OTHERWISE SPECIFIED ALL DIMENSIONS ARE NOMINAL.
2. ALL SPECIFICATIONS ARE SUBJECT TO CHANGE WITHOUT NOTICE AT ANY TIME.
3. DIMENSIONS ARE IN INCHES [mm].

DWG TITLE PE4084

CAD FILE 10/09/18 | SCALE N/A | SIZE A | 7361

CAGE CODE 53919

PASTERNACK® THE ENGINEER'S RF SOURCE
Pasternack Enterprises, Inc.
P.O. Box 16759 | Irvine | CA | 92623
Phone: (949) 261-1920 | **Fax:** (949) 261-7451
Website: www.pasternack.com | **E-Mail:** sales@pasternack.com

© 2018 Pasternack Enterprises All Rights Reserved

PASTERNACK®
www.pasternack.com

Mini UHF Male Connector Crimp/Solder Attachment For RG174, RG316, RG188

TECHNICAL DATA SHEET PE44090

Mini UHF Male Connector Crimp/Solder Attachment For RG174, RG316, RG188

Configuration

Connector	Mini UHF Male
Connector Interface Type	RG174,RG316,RG188
Cable Attachment Method (Shield/Contact)	Crimp/Solder
Body Style	Straight

Electrical Specifications

Impedance, Ohms	50

Mechanical Specifications

Size

Length, in [mm]	1.09 [27.69]
Width/Dia., in [mm]	0.452 [11.48]
Weight, lbs [g]	0.013 [5.9]

Connector

Type	Mini UHF Male
Contact Material and Plating	Gold
Body Material and Plating	Brass, Nickel
Dielectric Type	PTFE

Compliance Certifications (visit www.Pasternack.com for current document)

RoHS Compliant	Yes

Plotted and Other Data

Notes:	Values at 25 °C, sea level

Mini UHF Male Connector Crimp/Solder Attachment For RG174, RG316, RG188 from Pasternack Enterprises has same day shipment for domestic and International orders. Our RF, microwave and fiber optic products maintain a 99% availability and are part of the broadest selection in the industry.

Click the following link (or enter part number in “SEARCH” on website) to obtain additional part information including price, inventory and certifications: Mini UHF Male Connector Crimp/Solder Attachment For RG174, RG316, RG188 PE44090

URL: http://www.pasternack.com/mini-uhf-male-standard-rg174-rg316-rg188-connector-pe44090-p.aspx

The information contained in this document is accurate to the best of our knowledge and representative of the part described herein. It may be necessary to make modifications to the part and/or the documentation of the part, in order to implement improvements. Pasternack reserves the right to make such changes as required. Unless otherwise stated, all specifications are nominal.

Pasternack Enterprises, Inc. • P.O. Box 16759, Irvine, CA 92623
Phone: (866) 727-8376 or (949) 261-1920 • **Fax:** (949) 261-7451
Sales@Pasternack.com • Techsupport@Pasternack.com

© 2013 Pasternack Enterprises All Rights Reserved

PE44090 CAD Drawing

Mini UHF Male Connector Crimp/Solder Attachment For RG174, RG316, RG188

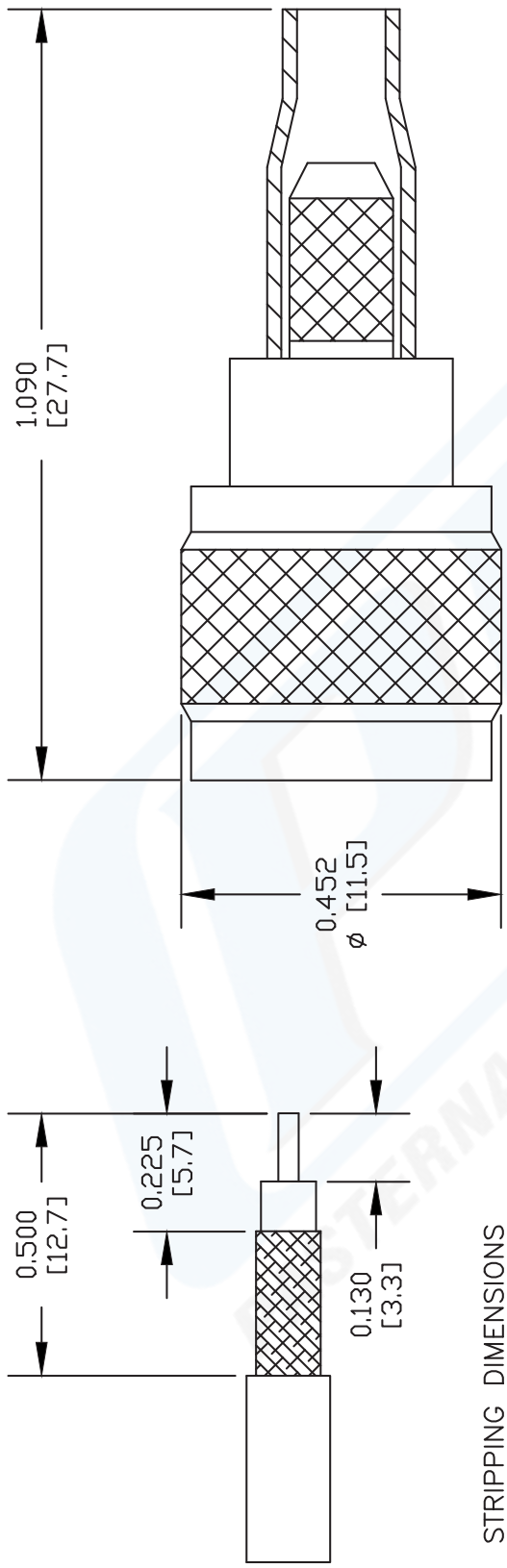

STRIPPING DIMENSIONS

CRIMP SIZE REQUIRED

CONTACT: .068" HEX CRIMP TOOL
FERRULE: .178" HEX CRIMP TOOL

NOTES:
1. UNLESS OTHERWISE SPECIFIED ALL DIMENSIONS ARE NOMINAL.
2. ALL SPECIFICATIONS ARE SUBJECT TO CHANGE WITHOUT NOTICE AT ANY TIME.
3. DIMENSIONS ARE IN INCHES [mm].
4. FITS MIL-C-17 AND EQUIVALENT CABLES.

DWG TITLE
PE44090

FSCM NO. 53919

CAD FILE 062502 | SCALE N/A | SIZE A | 127

PASTERNACK®
Pasternack Enterprises, Inc.
P.O. Box 16759 | Irvine | CA | 92623
Phone: (949) 261-1920 | **Fax:** (949) 261-7451
Website: www.pasternack.com | **E-Mail:** sales@pasternack.com

© 2013 Pasternack Enterprises All Rights Reserved

Flexible RG316 Coax Cable Single Shielded with Tan FEP Jacket

RF Cables
Technical Data Sheet

RG316/U

Configuration

- Flexible Cable
- 1 Shield(s)

Features

- High Flexibility
- FEP Jacket
- Velocity of Propagation 69%

Applications

- General Purpose
- Antenna Feeds
- Communication Systems
- Wireless Systems
- Indoor / Outdoor Uses
- High Temperature Applications
- High Flexibility Applications
- Jumper Cable Assemblies

Description

Flexible coaxial cable are ideal for applications where tight bends and continual flexure are required. Pasternack's RG316/U is a single shielded flexible coax cable with FEP jacket and compatible with a wide selection of connector types. This RG316/U coaxial cable has a stranded inner conductor for better flexibility and operates up to 3 GHz. The FEP jacket of this RG316/U coax cable makes it suitable for indoor/outdoor uses and high temperature applications. RG316/U datasheet specifications and outline drawing for this flexible cable are shown in the PDF below.

Pasternack carries a wide range of cables ready to ship same day to fit your needs. They are available in corrugated, flexible, formable or semi-rigid versions with different constructions of conductor materials, dielectric materials, shielding configurations and jacket materials. Our cables are designed to fit a wide range of performance criteria including attenuation, operating temperature, environmental factor, and power capability.

Electrical Specifications

Description	Minimum	Typical	Maximum	Units
Frequency Range	DC		3	GHz
Impedance		50		Ohms
Velocity of Propagation		69		%
Operating Voltage (AC)			900	Vrms
Dielectric Withstanding Voltage (AC)			2,000	Vrms
Jacket Spark			2,000	Vrms
Nominal Capacitance			32 [104.99]	[pF/m]

Click the following link (or enter part number in "SEARCH" on website) to obtain additional part information including price, inventory and certifications: Flexible RG316 Coax Cable Single Shielded with Tan FEP Jacket RG316/U

Pasternack Enterprises, Inc. • P.O. Box 16759, Irvine, CA 92623
Phone: (866) 727-8376 or (949) 261-1920 • **Fax:** (949) 261-7451
Sales@Pasternack.com • Techsupport@Pasternack.com

© 2019 Pasternack Enterprises All Rights Reserved

Flexible RG316 Coax Cable Single Shielded with Tan FEP Jacket

Performance by Frequency Band

Description	F1	F2	F3	F4	F5	Units
Frequency	0.05	0.1	0.4	1	3	GHz
Attenuation, Typ	7.5	11	21	38	58	dB/100ft
	24.61	36.09	68.9	124.67	190.29	dB/100m

Mechanical Specifications

Diameter	0.102 in [2.59 mm]
Weight	0.01 lbs/ft [0.01 Kg/m]

Construction Specifications

Description	Material and Plating	Diameter
Inner Conductor	Copper Clad Steel, Silver7	0.02 in 0.51 mm
Conductor Type	Stranded	
Dielectric	PTFE	0.06 in 1.52 mm
First Shield	Silver Plated Copper Braid 95% coverage	0.081 in 2.06 mm
Jacket	FEP, Tan	0.102 in [2.59 mm]

Environmental Specifications

Temperature

Operating Range	-55 to +200 deg C

Click the following link (or enter part number in “SEARCH” on website) to obtain additional part information including price, inventory and certifications: Flexible RG316 Coax Cable Single Shielded with Tan FEP Jacket RG316/U

Pasternack Enterprises, Inc. • P.O. Box 16759, Irvine, CA 92623
Phone: (866) 727-8376 or (949) 261-1920 • **Fax:** (949) 261-7451
Sales@Pasternack.com • Techsupport@Pasternack.com

© 2019 Pasternack Enterprises All Rights Reserved

Flexible RG316 Coax Cable Single Shielded with Tan FEP Jacket

Compliance Certifications (see product page for current document)

Plotted and Other Data

Notes:

Flexible RG316 Coax Cable Single Shielded with Tan FEP Jacket from Pasternack Enterprises has same day shipment for domestic and International orders. Our RF, microwave and millimeter wave products maintain a 99.4% availability and are part of the broadest selection in the industry.

Click the following link (or enter part number in “SEARCH” on website) to obtain additional part information including price, inventory and certifications: Flexible RG316 Coax Cable Single Shielded with Tan FEP Jacket RG316/U

URL: https://www.pasternack.com/flexible-rg316u-fep-jacket-silver-plated-copper-braid-outer-conductor-single-shielded-rg316-u-p.aspx

The information contained in this document is accurate to the best of our knowledge and representative of the part described herein. It may be necessary to make modifications to the part and/or the documentation of the part, in order to implement improvements. Pasternack reserves the right to make such changes as required. Unless otherwise stated, all specifications are nominal. Pasternack does not make any representation or warranty regarding the suitability of the part described herein for any particular purpose, and Pasternack does not assume any liability arising out of the use of any part or documentation.

Pasternack Enterprises, Inc. • P.O. Box 16759, Irvine, CA 92623
Phone: (866) 727-8376 or (949) 261-1920 • **Fax:** (949) 261-7451
Sales@Pasternack.com • Techsupport@Pasternack.com

© 2019 Pasternack Enterprises All Rights Reserved

RG316/U CAD Drawing

Flexible RG316 Coax Cable Single Shielded with Tan FEP Jacket

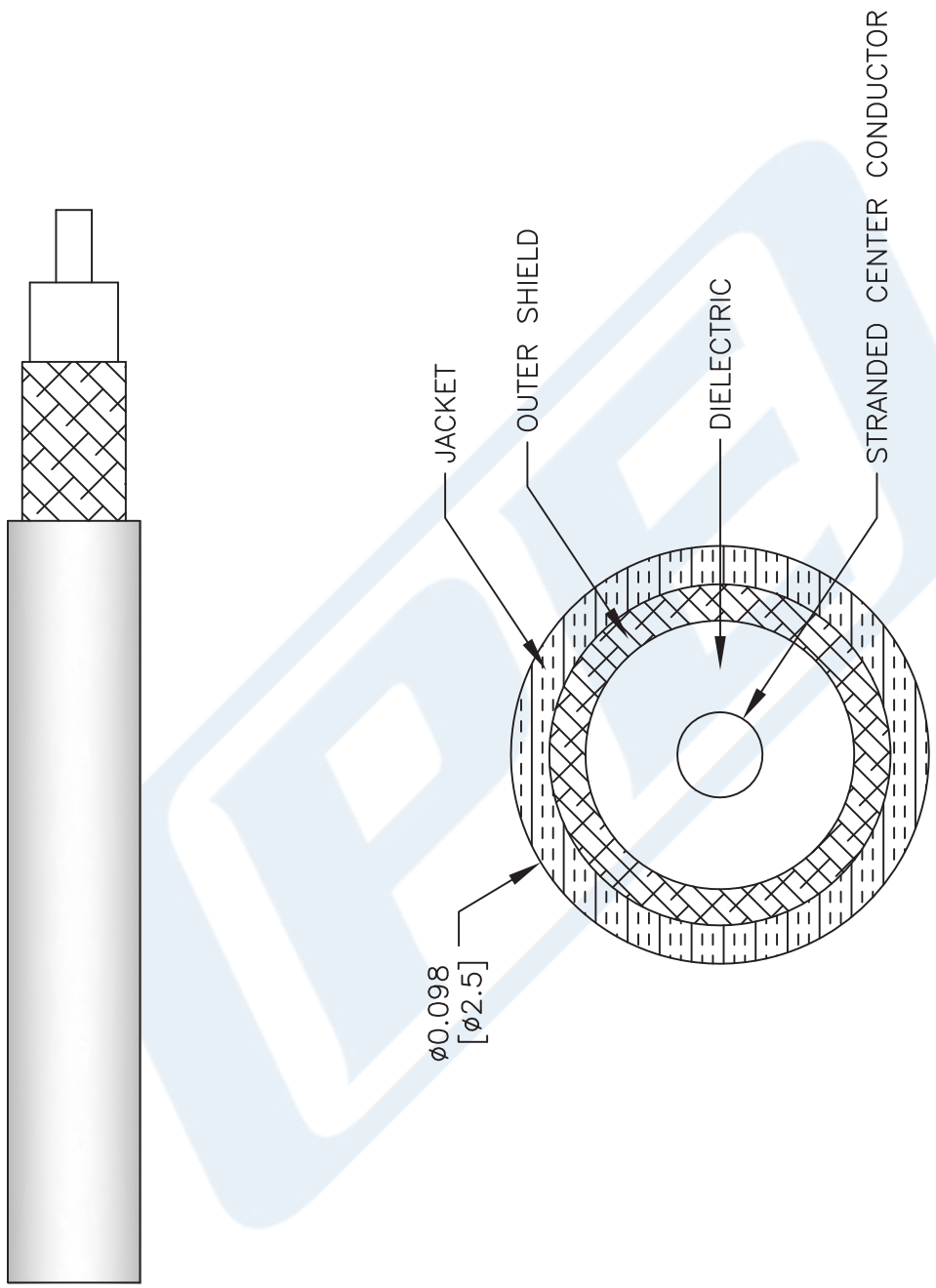

NOTES:
1. UNLESS OTHERWISE SPECIFIED ALL DIMENSIONS ARE NOMINAL.
2. ALL SPECIFICATIONS ARE SUBJECT TO CHANGE WITHOUT NOTICE AT ANY TIME.
3. DIMENSIONS ARE IN INCHES [mm].

DWG TITLE
RG316/U

FSCM NO. 53919

CAD FILE 111716 | SCALE N/A | SIZE A | 41742

PASTERNACK®
THE ENGINEER'S RF SOURCE
Pasternack Enterprises, Inc.
P.O. Box 16759 | Irvine | CA | 92623
Phone: (949) 261-1920 | **Fax:** (949) 261-7451
Website: www.pasternack.com | **E-Mail:** sales@pasternack.com

© 2019 Pasternack Enterprises All Rights Reserved