PASTERNACK
an INFINITE brand

7/16 DIN Female Connector Crimp/Solder Attachment For PE-C400, PE-B400, PE-B405, LMR-400, LMR-400-DB, LMR-400-UF

RF Connectors
Technical Data Sheet

PE44546

Configuration

- 7/16 DIN Female Connector
- 50 Ohms
- Straight Body Geometry
- Connector Interface Types: PE-C400, PE-B400, PE-B405, LMR-400, LMR-400-DB, LMR-400-UF

Features

- Silver Plated Contact

Applications

- General Purpose Test
- Custom Cable Assemblies

Description

Pasternack's PE44546 7/16 DIN female connector with crimp/solder attachment for PE-C400, PE-B400, PE-B405, LMR-400, LMR-400-DB and LMR-400-UF is part of our full line of RF components available for same-day shipping.

Our 7/16 DIN female connector PE44546 datasheet specifications and drawing with dimensions are shown below in this PDF. Pasternack's broad catalog of RF, microwave and millimeter wave connectors allows designers to configure and customize their signal connections however they like. Whether the need is to provide an I/O for a board design, or simply create a custom cable assembly configuration, Pasternack has the right connector for the job. Pasternack can also expertly build your custom cable assemblies for you and ship same-day.

Mechanical Specifications

Size

Length	1.89 in [48.01 mm]
Width/Dia.	1.14 in [28.96 mm]
Weight	0.195 lbs [88.45 g]

Material Specifications

Description	Material	Plating
Contact		Silver
Insulation	PTFE	
Body	Brass	Tri-Metal

Click the following link (or enter part number in "SEARCH" on website) to obtain additional part information including price, inventory and certifications: 7/16 DIN Female Connector Crimp/Solder Attachment For PE-C400, PE-B400, PE-B405, LMR-400, LMR-400-DB, LMR-400-UF PE44546

Pasternack Enterprises, Inc. • P.O. Box 16759, Irvine, CA 92623
Phone: (866) 727-8376 or (949) 261-1920 • **Fax:** (949) 261-7451
Sales@Pasternack.com • Techsupport@Pasternack.com

© 2019 Pasternack Enterprises All Rights Reserved

7/16 DIN Female Connector Crimp/Solder Attachment For PE-C400, PE-B400, PE-B405, LMR-400, LMR-400-DB, LMR-400-UF

Environmental Specifications

Compliance Certifications (see product page for current document)

Plotted and Other Data

Notes:

7/16 DIN Female Connector Crimp/Solder Attachment For PE-C400, PE-B400, PE-B405, LMR-400, LMR-400-DB, LMR-400-UF from Pasternack Enterprises has same day shipment for domestic and International orders. Our RF, microwave and millimeter wave products maintain a 99.4% availability and are part of the broadest selection in the industry.

Click the following link (or enter part number in “SEARCH” on website) to obtain additional part information including price, inventory and certifications: 7/16 DIN Female Connector Crimp/Solder Attachment For PE-C400, PE-B400, PE-B405, LMR-400, LMR-400-DB, LMR-400-UF PE44546

URL: https://www.pasternack.com/7-16-female-standard-pe-c400-0.400-connector-pe44546-p.aspx

The information contained in this document is accurate to the best of our knowledge and representative of the part described herein. It may be necessary to make modifications to the part and/or the documentation of the part, in order to implement improvements. Pasternack reserves the right to make such changes as required. Unless otherwise stated, all specifications are nominal. Pasternack does not make any representation or warranty regarding the suitability of the part described herein for any particular purpose, and Pasternack does not assume any liability arising out of the use of any part or documentation.

Pasternack Enterprises, Inc. • P.O. Box 16759, Irvine, CA 92623
Phone: (866) 727-8376 or (949) 261-1920 • **Fax:** (949) 261-7451
Sales@Pasternack.com • Techsupport@Pasternack.com

© 2019 Pasternack Enterprises All Rights Reserved

PE44546 CAD Drawing

7/16 DIN Female Connector Crimp/Solder Attachment For PE-C400, PE-B400, PE-B405, LMR-400, LMR-400-DB, LMR-400-UF

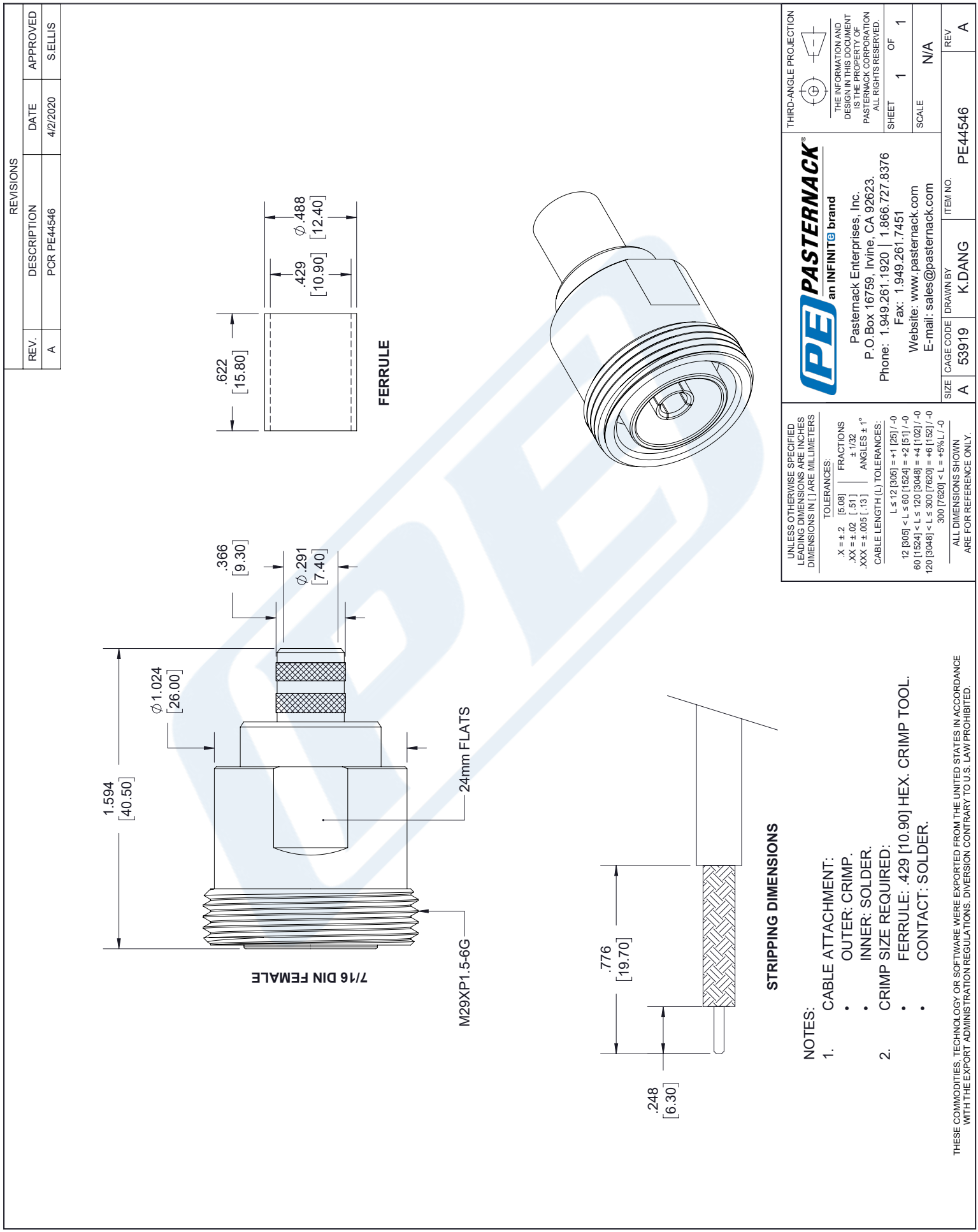

UHF Male Connector Crimp/Solder Attachment for PE-B400, PE-B405, PE-C400, LMR-400, 0.400 inch

RF Connectors Technical Data Sheet PE44054

Configuration

- UHF Male Connector
- 50 Ohms
- Straight Body Geometry
- PE-B400, PE-B405, PE-C400, LMR-400, 0.400 inch Interface Type
- Crimp/Solder Attachment

Features

- Gold Plated Contact

Applications

- General Purpose Test
- Custom Cable Assemblies

Description

Pasternack's PE44054 UHF male connector with crimp/solder attachment for PE-B400, PE-B405, PE-C400, LMR-400 and 0.400 inch is part of our full line of RF components available for same-day shipping.

Our UHF male connector PE44054 datasheet specifications and drawing with dimensions are shown below in this PDF. Pasternack's broad catalog of RF, microwave and millimeter wave connectors allows designers to configure and customize their signal connections however they like. Whether the need is to provide an I/O for a board design, or simply create a custom cable assembly configuration, Pasternack has the right connector for the job. Pasternack can also expertly build your custom cable assemblies for you and ship same-day.

Mechanical Specifications

Size

Length	1.35 in [34.29 mm]
Width/Dia.	0.7 in [17.78 mm]
Weight	0.041 lbs [18.6 g]

Material Specifications

Description	Material	Plating
Contact		Gold
Insulation	PTFE	
Body	Brass	Nickel
Coupling Nut	Brass	Nickel

Click the following link (or enter part number in "SEARCH" on website) to obtain additional part information including price, inventory and certifications: UHF Male Connector Crimp/Solder Attachment for PE-B400, PE-B405, PE-C400, LMR-400, 0.400 inch PE44054

Pasternack Enterprises, Inc. • P.O. Box 16759, Irvine, CA 92623
Phone: (866) 727-8376 or (949) 261-1920 • **Fax:** (949) 261-7451
Sales@Pasternack.com • Techsupport@Pasternack.com

© 2016 Pasternack Enterprises All Rights Reserved

UHF Male Connector Crimp/Solder Attachment for PE-B400, PE-B405, PE-C400, LMR-400, 0.400 inch

Compliance Certifications (see product page for current document)

Plotted and Other Data

Notes:

UHF Male Connector Crimp/Solder Attachment for PE-B400, PE-B405, PE-C400, LMR-400, 0.400 inch from Pasternack Enterprises has same day shipment for domestic and International orders. Our RF, microwave and millimeter wave products maintain a 99% availability and are part of the broadest selection in the industry.

Click the following link (or enter part number in "SEARCH" on website) to obtain additional part information including price, inventory and certifications: UHF Male Connector Crimp/Solder Attachment for PE-B400, PE-B405, PE-C400, LMR-400, 0.400 inch PE44054

URL: https://www.pasternack.com/uhf-male-pe-b400-pe-b405-lmr-400-uf-connector-pe44054-p.aspx

The information contained in this document is accurate to the best of our knowledge and representative of the part described herein. It may be necessary to make modifications to the part and/or the documentation of the part, in order to implement improvements. Pasternack reserves the right to make such changes as required. Unless otherwise stated, all specifications are nominal. Pasternack does not make any representation or warranty regarding the suitability of the part described herein for any particular purpose, and Pasternack does not assume any liability arising out of the use of any part or documentation.

Pasternack Enterprises, Inc. • P.O. Box 16759, Irvine, CA 92623
Phone: (866) 727-8376 or (949) 261-1920 • **Fax:** (949) 261-7451
Sales@Pasternack.com • Techsupport@Pasternack.com

© 2016 Pasternack Enterprises All Rights Reserved

PE44054 CAD Drawing

UHF Male Connector Crimp/Solder Attachment for PE-B400, PE-B405, PE-C400, LMR-400, 0.400 inch

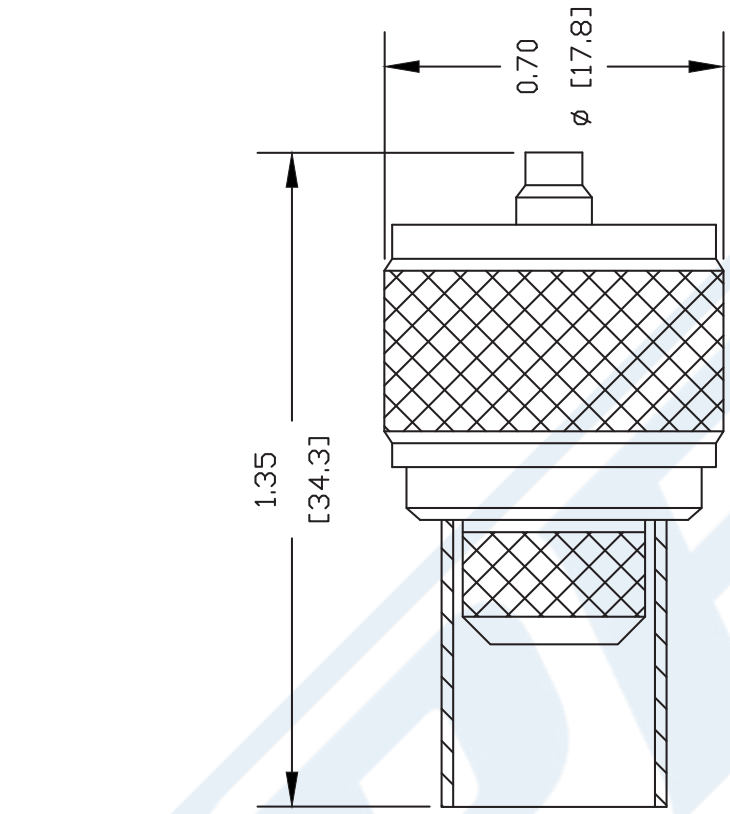

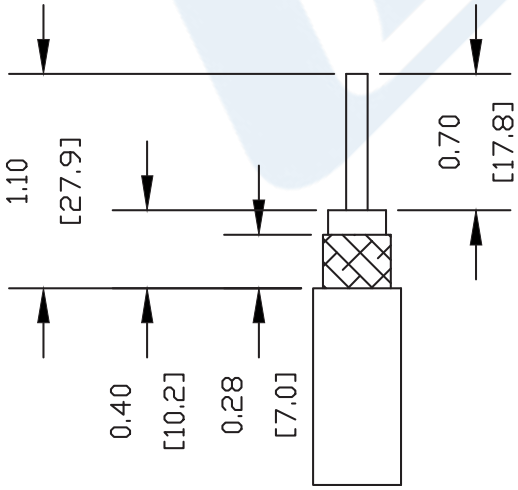

STRIPPING DIMENSIONS

CRIMP SIZE REQUIRED

CONTACT: SOLDER
FERRULE: .429" HEX CRIMP TOOL

NOTES:
1. UNLESS OTHERWISE SPECIFIED ALL DIMENSIONS ARE NOMINAL.
2. ALL SPECIFICATIONS ARE SUBJECT TO CHANGE WITHOUT NOTICE AT ANY TIME.
3. DIMENSIONS ARE IN INCHES [mm].
4. FITS MIL-C-17 AND EQUIVALENT CABLES.

DWG TITLE **PE44054**

REV. A | FSCM NO. 53919 | CAD FILE 050609 | SCALE N/A | SIZE A | 127

PASTERNACK®
Pasternack Enterprises, Inc.
P.O. Box 16759 | Irvine | CA | 92623
Phone: (949) 261-1920 | **Fax:** (949) 261-7451
Website: www.pasternack.com | **E-Mail:** sales@pasternack.com

© 2016 Pasternack Enterprises All Rights Reserved

TIMES MICROWAVE SYSTEMS

LMR-®400-UF UltraFlex Communications Coax

Ideal for...

- Drop-in replacement for RG-8/9913 Air-Dielectric type Cable
- Jumper Assemblies in Wireless Communications Systems
- Short Antenna Feeder runs
- Any application that requires periodic/repeated flexing

• **LMR®- UltraFlex** has a stranded center conductor and rubber outer jacket designed for multiple bending/flexing cycles. It is used for both indoor and outdoor applications.

• **Flexibility** and bendability are hallmarks of the LMR-400-UF cable design. The flexible outer conductor enables the tightest bend radius available for any cable of similar size and performance.

• **Low Loss** is another hallmark feature of LMR-400-UF. Size for size LMR has the lowest loss of any flexible cable and comparable loss to semirigid hard-line cables.

• **RF Shielding** is 50 dB greater than typical single shielded coax (40 dB). The multi-ply bonded foil outer conductor is rated conservatively at > 90 dB (i.e. >180 dB between two adjacent cables).

• **Weatherability**: LMR-400-UF cables are designed for outdoor exposure and have a life expectancy in excess of 10 years.

• **Connectors**: A wide variety of connectors are available for LMR-400-UF cable, including all common interface types, reverse polarity, and solder-on center pins. Most LMR connectors employ crimp outer attachment using standard hex crimp sizes.

• **Cable Assemblies**: All LMR-400-UF cable types are available as pre-terminated cable assemblies. Refer to the section on FlexTech for further details.

Part Description				
Part Number	Application	Jacket	Color	Stock Code
LMR-400-UF	Indoor/Outdoor	TPE	Black	54040

Construction Specifications			
Description	Material	In.	(mm)
Inner Conductor	Stranded BC	0.108	(2.74)
Dielectric	Foam Polyethylene	0.285	(7.24)
Outer Conductor	Aluminum Tape	0.291	(7.39)
Overall Braid	Tinned Copper	0.320	(8.13)
Jacket	Black Thermoplastic Elastomer	0.405	(10.29)

TIMES MICROWAVE SYSTEMS

LMR®-400-UF UltraFlex Communications Coax

Connectors

Interface	Description	Part Number	Stock Code	VSWR** Freq. (GHz)	Coupling Nut	Inner Contact Attach	Outer Contact Attach	Finish* Body /Pin	Length in	Length (mm)	Width in	Width (mm)	Weight lb	Weight (g)
7-16 DIN Female	Straight Jack	TC-400-716-FC	3190-376	<1.25:1 (2.5)	NA	Solder	Clamp	S/S	1.6	(41)	1.13	(28.7)	0.281	(127.5)
7-16 DIN Male	Straight Plug	TC-400-716-MC	3190-279	<1.25:1 (2.5)	Hex	Solder	Clamp	S/S	1.4	(36)	1.40	(35.6)	0.268	(121.6)
BNC Male	Straight Plug	TC-400-BM	3190-318	<1.25:1 (2.5)	Knurl	Solder	Crimp	N/S	1.7	(43)	0.56	(14.2)	0.063	(28.6)
Mini-UHF	Straight Plug	TC-400-MUHF	3190-520	<1.25:1 (2.5)	Knurl	Solder	Crimp	N/G	1.1	(28)	0.50	(12.7)	0.020	(9.1)
N Female	Straight Jack	TC-400-NFC	3190-299	<1.25:1 (2.5)	NA	Solder	Clamp	N/S	1.6	(41)	0.75	(19.1)	0.119	(54.0)
N Male	Straight Plug	SC-400-NM	3190-1454	<1.25:1 (2.5)	Knurl	Solder	Crimp	N/G	1.5	(38)	0.75	(19.1)	0.090	(40.8)
	Straight Plug	TC-400-NM	3190-188	<1.25:1 (2.5)	Knurl	Solder	Crimp	N/G	1.5	(38)	0.75	(19.1)	0.090	(40.8)
	Straight Plug	TC-400-NMC	3190-277	<1.25:1 (2.5)	Knurl	Solder	Clamp	N/G	1.5	(38)	0.75	(19.1)	0.121	(54.9)
	Straight Plug	TC-400-NMH-D	3190-552	<1.25:1 (10)	Hex/Knurl	Solder	Crimp	A/G	1.5	(38)	0.89	(22.6)	0.113	(51.3)
	Right Angle	TC-400-NMH-RA	3190-422#	<1.35:1 (6)	Hex	Solder	Crimp	S/G	1.8	(46)	1.25	(31.8)	0.130	(59.0)
	Right Angle	TC-400-NMH-RA-D	3190-2293#	<1.35:1 (6)	Hex/Knurl	Solder	Crimp	A/G	1.8	(46)	1.25	(31.8)	0.130	(59.0)
SMA Male	Straight Plug	TC-400-SM	3190-439	<1.25:1 (8)	Hex	Solder	Crimp	N/G	1.2	(29)	0.50	(12.7)	0.032	(14.5)
TNC Male	Straight Plug	TC-400-TM	3190-260	<1.25:1 (2.5)	Knurl	Solder	Crimp	N/S	1.7	(43)	0.59	(15.0)	0.074	(33.6)
	Right Angle	TC-400-TM-RA	3190-442#	<1.35:1 (2.5)	Knurl	Solder	Crimp	N/G	1.7	(43)	0.59	(15.0)	0.085	(38.6)

* Finish metals: N=Nickel, S=Silver, G=Gold, SS=Stainless Steel, A=Alballoy **VSWR spec based on 3 foot cable with a connector pair #Available in bulk pack

Mechanical Specifications

Performance Property	Units	US	(metric)
Bend Radius: installation	in. (mm)	1.0	(25.4)
Bend Radius: repeated	in. (mm)	4.0	(101.6)
Bending Moment	ft-lb (N-m)	0.375	(0.51)
Weight	lb/ft (kg/m)	.088	(0.131)
Tensile Strength	lb (kg)	160	(72.6)
Flat Plate Crush	lb/in. (kg/mm)	20	(0.36)

Environmental Specifications

Performance Property	°F	°C
Installation Temperature Range	-40/+185	-40/+85
Storage Temperature Range	-94/+185	-70/+85
Operating Temperature Range	-40/+185	-40/+85

Electrical Specifications

Performance Property	Units	US	(metric)
Cutoff Frequency	GHz	16.2	
Velocity of Propagation	%	85	
Dielectric Constant	NA	1.38	
Time Delay	nS/ft (nS/m)	1.20	(3.92)
Impedance	ohms	50	
Capacitance	pF/ft (pF/m)	23.9	(78.40)
Inductance	uH/ft (uH/m)	0.060	(0.21)
Shielding Effectiveness	dB	>90	
DC Resistance			
Inner Conductor	ohms/1000ft (/km)	1.07	(3.51)
Outer Conductor	ohms/1000ft (/km)	1.65	(5.4)
Voltage Withstand	Volts DC	2500	
Jacket Spark	Volts RMS	8000	
Peak Power	kW	16	

Attenuation vs. Frequency (typical)

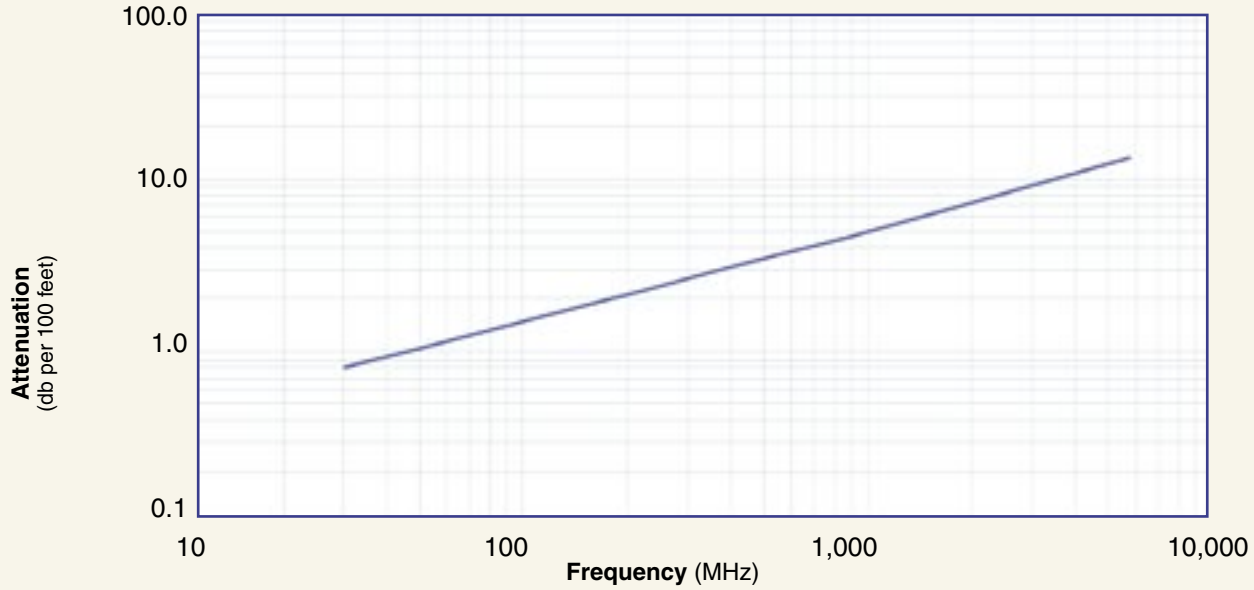

Frequency (MHz)	30	50	150	220	450	900	1500	1800	2000	2500	5800
Attenuation dB/100 ft	0.8	1.1	1.8	2.2	3.3	4.7	6.2	6.8	7.2	8.1	13.0
Attenuation dB/100 m	2.7	3.5	6.1	7.4	10.7	15.4	20.2	22.3	23.6	26.6	42.6
Avg. Power kW	2.77	2.14	1.22	1.00	0.69	0.48	0.36	0.33	0.31	0.28	0.17

Calculate Attenuation = (0.146748) • $\sqrt{\text{FMHz}}$ + (0.000312) • FMHz (interactive calculator available at http://www.timesmicrowave.com/cable_calculators)
Attenuation: VSWR=1.0; Ambient = +25°C (77°F) **Power:** VSWR=1.0; Ambient = +40°C; Inner Conductor = 100°C (212°F);
Sea Level; dry air; atmospheric pressure; no solar loading

GK-S400TT

HG-400T

Hardware Accessories

Type	Part Number	Stock Code	Description
Ground Kit	GK-S400TT	GK-S400TT	Standard Grounding Kit (each)
Hoisting Grip	HG-400T	HG-400T	Laced Type (each)

HX-4

Y1719

CT-400/300

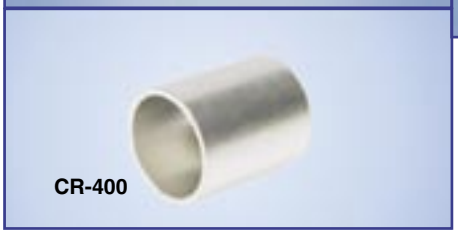
CR-400

CCT-01

Install Tools

Type	Part Number	Stock Code	Description
Crimp Tool	HX-4	3190-200	Crimp Handle
Crimp Dies	Y1719	3190-202	.429" Hex Dies
Crimp Tool	CT-400/300	3190-666	Crimp tool for LMR 400 connectors
Crimp Rings	CR-400	3190-830	Crimp rings for TC/EZ-400 connectors (package of 10)
Cutting Tool	CCT-01	3190-1544	Cable end flush cut tool
Replacement Blade	RB-01	3190-1609	Replacement blade for cutting tool