PASTERNACK®
THE ENGINEER'S RF SOURCE

# SC Male Connector Crimp/Solder Attachment for RG55, RG141, RG142, RG223, RG400



## Configuration

- SC Male Connector
- MIL-STD-348
- 50 Ohms
- Straight Body Geometry
- RG55, RG141, RG142, RG223, RG400 Interface Type
- Crimp/Solder Attachment

## Features

- Silver Plated Contact
- Contact plating according to QQ-S-365

## Applications

- General Purpose Test
- Custom Cable Assemblies

### Description

Pasternack's PE4231 SC male connector with crimp/solder attachment for RG55, RG141, RG142, RG223 and RG400 is part of our full line of RF components available for same-day shipping.

Our SC male connector PE4231 datasheet specifications and drawing with dimensions are shown below in this PDF. Pasternack's broad catalog of RF, microwave and millimeter wave connectors allows designers to configure and customize their signal connections however they like. Whether the need is to provide an I/O for a board design, or simply create a custom cable assembly configuration, Pasternack has the right connector for the job. Pasternack can also expertly build your custom cable assemblies for you and ship same-day.

### Mechanical Specifications

**Size**

| | |
|---|---|
| Length | 1.48 in [37.59 mm] |
| Width/Dia. | 0.8 in [20.32 mm] |
| Weight | 0.068 lbs [30.84 g] |

**Material Specifications**

| Description | Material | Plating |
|---|---|---|
| Contact | | Silver<br>QQ-S-365 |
| Insulation | PTFE | |
| Body | Brass | Nickel<br>QQ-N-290 |
| Coupling Nut | Brass | Nickel<br>QQ-N-290 |

Click the following link (or enter part number in "SEARCH" on website) to obtain additional part information including price, inventory and certifications: SC Male Connector Crimp/Solder Attachment for RG55, RG141, RG142, RG223, RG400 PE4231

Pasternack Enterprises, Inc. • P.O. Box 16759, Irvine, CA 92623
**Phone:** (866) 727-8376 or (949) 261-1920 • **Fax:** (949) 261-7451
Sales@Pasternack.com • Techsupport@Pasternack.com

© 2016 Pasternack Enterprises All Rights Reserved

# SC Male Connector Crimp/Solder Attachment for RG55, RG141, RG142, RG223, RG400



## Environmental Specifications

**Temperature**

| | |
|---|---|
| Operating Range | -65 to +165 deg C |

## Compliance Certifications (see product page for current document)

## Plotted and Other Data

Notes:

SC Male Connector Crimp/Solder Attachment for RG55, RG141, RG142, RG223, RG400 from Pasternack Enterprises has same day shipment for domestic and International orders. Our RF, microwave and millimeter wave products maintain a 99% availability and are part of the broadest selection in the industry.

Click the following link (or enter part number in "SEARCH" on website) to obtain additional part information including price, inventory and certifications: SC Male Connector Crimp/Solder Attachment for RG55, RG141, RG142, RG223, RG400 PE4231

URL: https://www.pasternack.com/sc-male-standard-rg55-rg141-rg142-rg223-rg400-connector-pe4231-p.aspx

The information contained in this document is accurate to the best of our knowledge and representative of the part described herein. It may be necessary to make modifications to the part and/or the documentation of the part, in order to implement improvements. Pasternack reserves the right to make such changes as required. Unless otherwise stated, all specifications are nominal. Pasternack does not make any representation or warranty regarding the suitability of the part described herein for any particular purpose, and Pasternack does not assume any liability arising out of the use of any part or documentation.

Pasternack Enterprises, Inc. • P.O. Box 16759, Irvine, CA 92623
**Phone:** (866) 727-8376 or (949) 261-1920 • **Fax:** (949) 261-7451
Sales@Pasternack.com • Techsupport@Pasternack.com

© 2016 Pasternack Enterprises All Rights Reserved

# PE4231 CAD Drawing

SC Male Connector Crimp/Solder Attachment for RG55, RG141, RG142, RG223, RG400

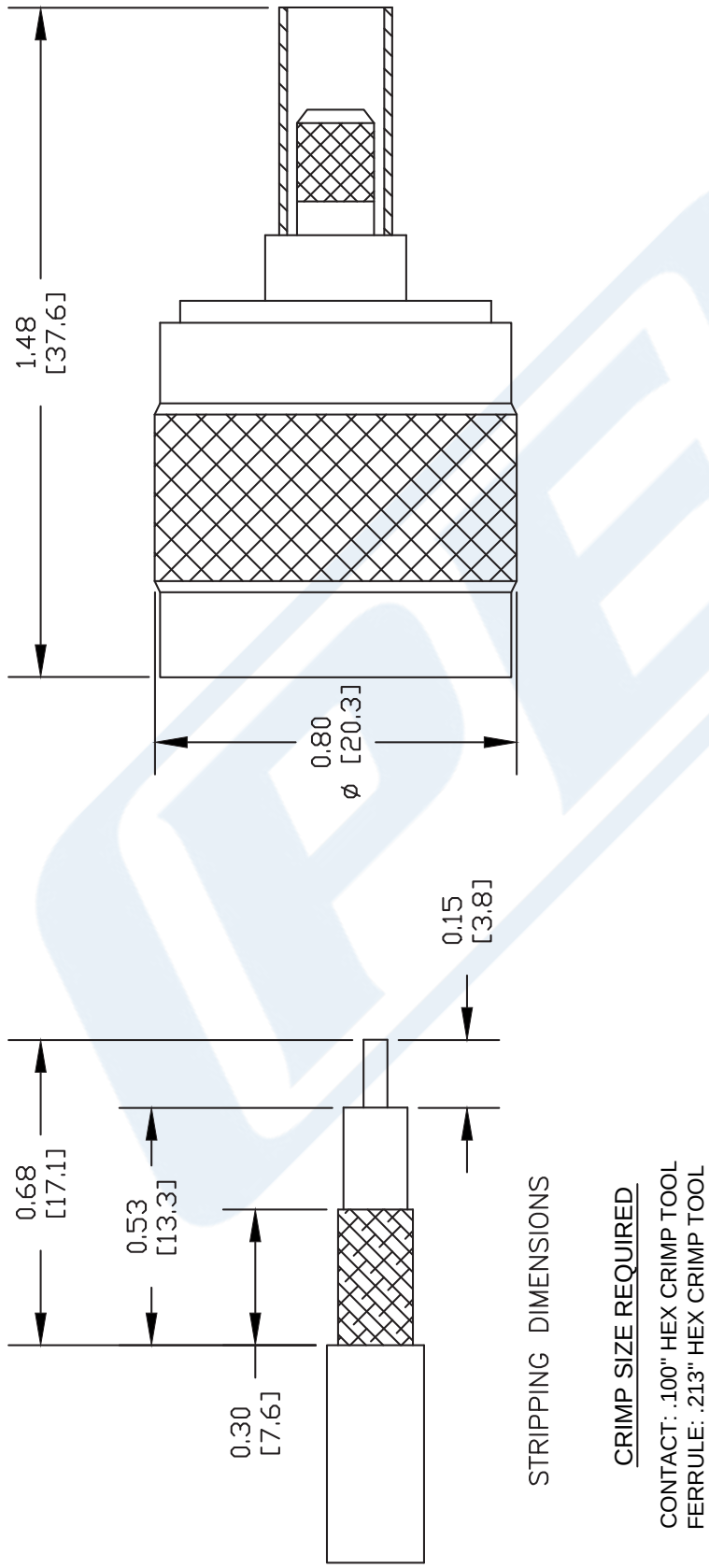


NOTES:
1. UNLESS OTHERWISE SPECIFIED ALL DIMENSIONS ARE NOMINAL.
2. ALL SPECIFICATIONS ARE SUBJECT TO CHANGE WITHOUT NOTICE AT ANY TIME.
3. DIMENSIONS ARE IN INCHES [mm].
4. FITS MIL-C-17 AND EQUIVALENT CABLES.

DWG TITLE
PE4231

| REV. - | FSCM NO. 53919 | CAD FILE 042309 | SCALE N/A | SIZE A | 147 |
|---|---|---|---|---|---|

PASTERNACK®
Pasternack Enterprises, Inc.
P.O. Box 16759 | Irvine | CA | 92623
**Phone:** (949) 261-1920 | **Fax:** (949) 261-7451
**Website:** www.pasternack.com | **E-Mail:** sales@pasternack.com

© 2016 Pasternack Enterprises All Rights Reserved

PASTERNACK®
THE ENGINEER'S RF SOURCE

# N Female Connector Crimp/Solder Attachment For RG223, RG142, RG400, RG55, White Bronze

## TECHNICAL DATA SHEET PE44789

### Configuration

| | |
|---|---|
| Connector | N Female |
| Connector Interface Type | RG223,RG142,RG400,RG55 |
| Cable Attachment Method (Shield/Contact) | Crimp/Solder |
| Body Style | Straight |

### Electrical Specifications

| | |
|---|---|
| Impedance, Ohms | 50 |

### Mechanical Specifications

**Size**

| | |
|---|---|
| Length, in [mm] | 1.45 [36.83] |
| Width/Dia., in [mm] | 0.67 [17.02] |
| Weight, lbs [g] | 0.11 [49.9] |

**Connector**

| | |
|---|---|
| Type | N Female |
| Contact Material and Plating | Phosphor Bronze, Gold |
| Body Material and Plating | Brass, Nexcote |
| Dielectric Type | Teflon |

### Compliance Certifications (visit www.Pasternack.com for current document)

| | |
|---|---|
| RoHS Compliant | Yes |

### Plotted and Other Data

| | |
|---|---|
| Notes: | Values at 25 °C, sea level |

N Female Connector Crimp/Solder Attachment For RG223, RG142, RG400, RG55, White Bronze from Pasternack Enterprises has same day shipment for domestic and International orders. Our RF, microwave and fiber optic products maintain a 99% availability and are part of the broadest selection in the industry.

Click the following link (or enter part number in "SEARCH" on website) to obtain additional part information including price, inventory and certifications: N Female Connector Crimp/Solder Attachment For RG223, RG142, RG400, RG55, White Bronze PE44789

URL: http://www.pasternack.com/n-female-standard-rg223-rg142-rg400-rg55-connector-pe44789-p.aspx

The information contained in this document is accurate to the best of our knowledge and representative of the part described herein. It may be necessary to make modifications to the part and/or the documentation of the part, in order to implement improvements. Pasternack reserves the right to make such changes as required. Unless otherwise stated, all specifications are nominal.

Pasternack Enterprises, Inc. • P.O. Box 16759, Irvine, CA 92623
**Phone:** (866) 727-8376 or (949) 261-1920 • **Fax:** (949) 261-7451
Sales@Pasternack.com • Techsupport@Pasternack.com

© 2014 Pasternack Enterprises All Rights Reserved

# PE44789 CAD Drawing

N Female Connector Crimp/Solder Attachment For RG223, RG142, RG400, RG55, White Bronze

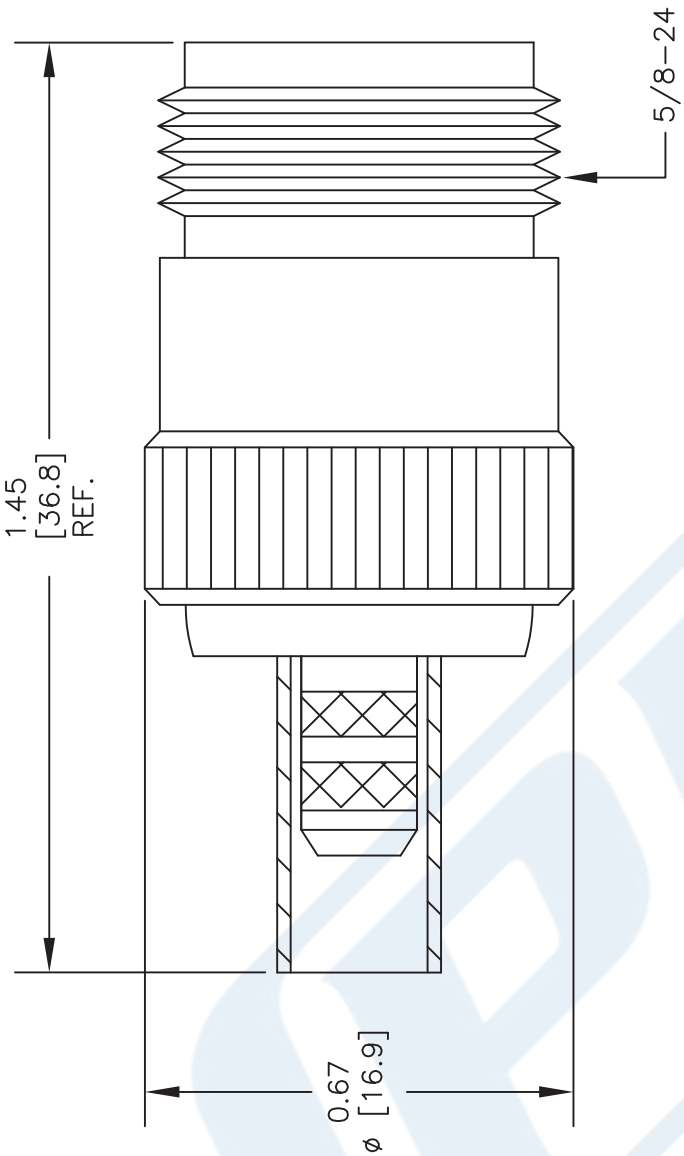


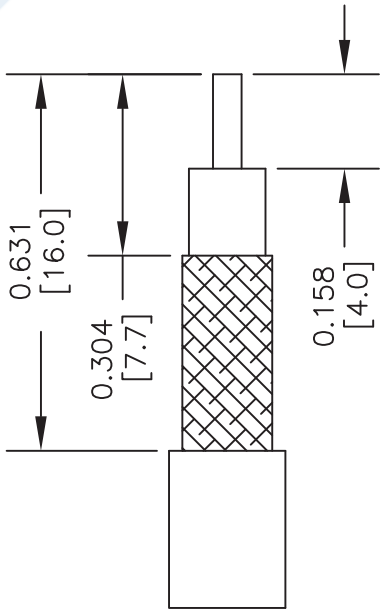


STRIPPING DIMENSIONS

CRIMP SIZE REQUIRED

CONTACT: SOLDER
FERRULE: .213" HEX CRIMP TOOL

NOTES:
1. UNLESS OTHERWISE SPECIFIED ALL DIMENSIONS ARE NOMINAL.
2. ALL SPECIFICATIONS ARE SUBJECT TO CHANGE WITHOUT NOTICE AT ANY TIME.
3. DIMENSIONS ARE IN INCHES [mm].
4. FITS MIL-C-17 AND EQUIVALENT CABLES.

DWG TITLE
PE44789

FSCM NO. 53919

CAD FILE 022614 | SCALE N/A | SIZE A | 2233

PASTERNACK®
THE ENGINEER'S RF SOURCE
Pasternack Enterprises, Inc.
P.O. Box 16759 | Irvine | CA | 92623
**Phone:** (949) 261-1920 | **Fax:** (949) 261-7451
**Website:** www.pasternack.com | **E-Mail:** sales@pasternack.com

© 2014 Pasternack Enterprises All Rights Reserved

PASTERNACK®
www.pasternack.com

# Flexible RG142 Coax Cable Double Shielded with Tan FEP Jacket

## TECHNICAL DATA SHEET RG142B/U

Flexible RG142 Coax Cable Double Shielded with Tan FEP Jacket

### Configuration

| | |
|---|---|
| Inner Conductor Material and Plating | Copper Clad Steel, Silver |
| Dielectric Type | PTFE |
| Shield Materials | Silver Plated Copper Braid, Silver Plated Copper Braid |
| Jacket Material and Color | FEP, Tan |

### Electrical Specifications

| | |
|---|---|
| Impedance, Ohms | 50 |
| Velocity of Propagation, % | 69.2 |
| Maximum Operating Frequency, GHz | 8 |
| RF Shielding, dB | 90 |
| Capacitance, pF/ft [pF/m] | 29.4 [96.46] |
| Maximum Operating Voltage, Volts | 1,900 |

**Electrical Specifications by Frequency**

**Frequency 1**

| | |
|---|---|
| Frequency, MHz | 100 |
| Attenuation, dB/100ft [dB/100m] | 3.9 [12.8] |

**Frequency 2**

| | |
|---|---|
| Frequency, MHz | 1000 |
| Attenuation, dB/100ft [dB/100m] | 13 [42.65] |

**Frequency 3**

| | |
|---|---|
| Frequency, GHz | 3 |
| Attenuation, dB/100ft [dB/100m] | 23.8 [78.08] |

**Frequency 4**

| | |
|---|---|
| Frequency, GHz | 5 |
| Attenuation, dB/100ft [dB/100m] | 36 [118.11] |

### Mechanical Specifications

**Temperature**

| | |
|---|---|
| Operating Range, deg C | -55 to +200 |

**Inner Conductor**

| | |
|---|---|
| Number of Strands | 1 |
| Material | Copper Clad Steel |
| Plating | Silver |
| Diameter, in [mm] | 0.037 [0.94] |

Click the following link (or enter part number in “SEARCH” on website) to obtain additional part information including price, inventory and certifications: Flexible RG142 Coax Cable Double Shielded with Tan FEP Jacket RG142B/U

The information contained in this document is accurate to the best of our knowledge and representative of the part described herein. It may be necessary to make modifications to the part and/or the documentation of the part, in order to implement improvements. Pasternack reserves the right to make such changes as required. Unless otherwise stated, all specifications are nominal.

Pasternack Enterprises, Inc. • P.O. Box 16759, Irvine, CA 92623
**Phone:** (866) 727-8376 or (949) 261-1920 • **Fax:** (949) 261-7451
Sales@Pasternack.com • Techsupport@Pasternack.com

© 2013 Pasternack Enterprises All Rights Reserved

# Flexible RG142 Coax Cable Double Shielded with Tan FEP Jacket

## TECHNICAL DATA SHEET RG142B/U

**Dielectric:**

| | |
|---|---|
| Type | PTFE |
| Diameter, in [mm] | 0.116 [2.95] |

**Shield:**

| | |
|---|---|
| Number of | 2 |
| Material 1 | Silver Plated Copper Braid |
| Material 2 | Silver Plated Copper Braid |
| Diameter, in [mm] | 0.156 [3.96] |

**Jacket:**

| | |
|---|---|
| Material | FEP |
| Diameter, in [mm] | 0.195 [4.95] |
| Color | Tan |
| One Time Minimum Bend Radius, in [mm] | 0.984 [24.99] |
| Repeated Minimum Bend Radius, in [mm] | 2 [50.8] |
| Weight, lbs/ft [Kg/m] | 0.046 [0.07] |

**Compliance Certifications** (visit www.Pasternack.com for current document)

| | |
|---|---|
| RoHS Compliant | Yes |

**Plotted and Other Data**

| | |
|---|---|
| Notes: | Values at 25 °C, sea level |

URL: http://www.pasternack.com/flexible-0.195-rg142-50-ohm-coax-cable-fep-jacket-rg142b-u-p.aspx

Flexible RG142 Coax Cable Double Shielded with Tan FEP Jacket from Pasternack Enterprises has same day shipment for domestic and International orders. Our RF, microwave and fiber optic products maintain a 99% availability and are part of the broadest selection in the industry.

The information contained in this document is accurate to the best of our knowledge and representative of the part described herein. It may be necessary to make modifications to the part and/or the documentation of the part, in order to implement improvements. Pasternack reserves the right to make such changes as required. Unless otherwise stated, all specifications are nominal.

Pasternack Enterprises, Inc. • P.O. Box 16759, Irvine, CA 92623
**Phone:** (866) 727-8376 or (949) 261-1920 • **Fax:** (949) 261-7451
Sales@Pasternack.com • Techsupport@Pasternack.com

© 2013 Pasternack Enterprises All Rights Reserved

# RG142B/U CAD Drawing

Flexible RG142 Coax Cable Double Shielded with Tan FEP Jacket

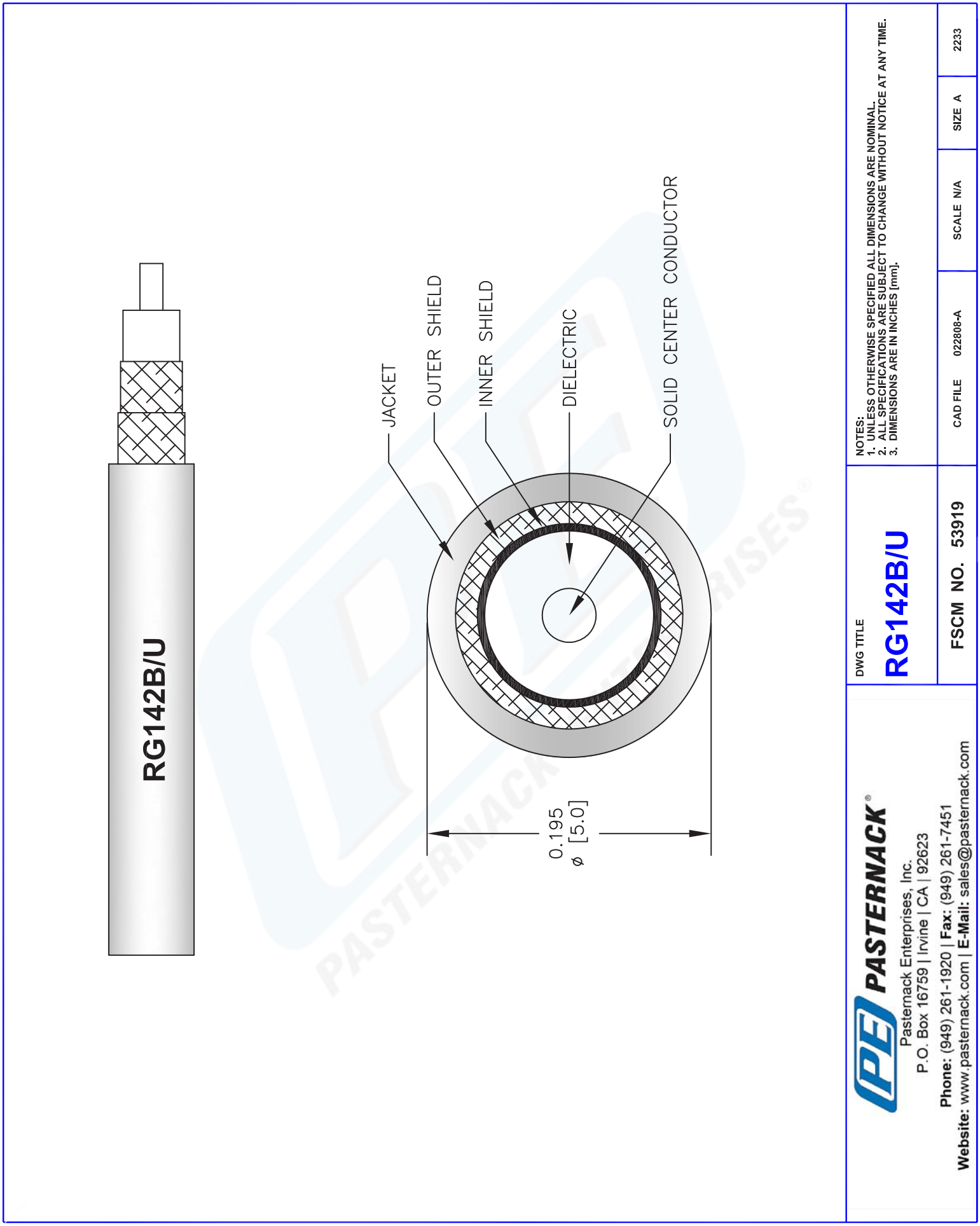


© 2012 Pasternack Enterprises All Rights Reserved