PASTERNACK®
THE ENGINEER'S RF SOURCE

QN Male Snap-On Connector Crimp/Solder Attachment for LMR-240, PE-C240

RF Connectors
Technical Data Sheet

PE45222

Configuration

- Snap-On QN Male Connector
- 50 Ohms
- Straight Body Geometry
- LMR-240, PE-C240 Interface Type
- Crimp/Solder Attachment

Features

- Max. Operating Frequency 6 GHz
- Excellent VSWR of 1.2:1
- Silver Plated Brass Contact
- Operates to 6 GHz
- Quick Locking Snap On Connection
- Reduced connector to connector spacing
- 100 mating cycles
- No torque wrench required
- 360 degree rotation capability

Applications

- General Purpose Test
- Custom Cable Assemblies
- Telecommunication system
- Rack and Panel Mount Applications
- High connection density systems

Description

Pasternack's PE45222 QN male snap-on connector with crimp/solder attachment for LMR-240 and PE-C240 is part of our full line of RF components available for same-day shipping. Our QN male connector operates up to a maximum frequency of 6 GHz and offers excellent VSWR of 1.2:1. Pasternack's PE45222 Snap-On QN Male connector is part of our full line of RF connectors available for same-day shipping. Our Male QN connector operates to 6 GHz. The PE45222 provides excellent VSWR of 1.2:1 maximum to 6 GHz. The PE45222 Pasternack RF connector is designed for use with LMR-240 and PE-C240 and is attached to the body using a crimp connection and the center contact employs a solder connection.

QN connectors allow for an easy snap-on connection that securely locks in place for an easy mating reliable connection. In addition to the time savings offered by the Snap-On interface the QN interface allow for a tighter density than a Threaded N interface which requires the use of a torque wrench to properly complete the connection. The QN interface is operational to 6 GHz when used on LMR-240 Coaxial cable. This QN connector is QLF approved and insures intermateability with other QLF QN products.

Our QN male connector PE45222 datasheet specifications and drawing with dimensions are shown below in this PDF. Pasternack's broad catalog of RF, microwave and millimeter wave connectors allows designers to configure and customize their signal connections however they like. Whether the need is to provide an I/O for a board design, or simply create a custom cable assembly configuration, Pasternack has the right connector for the job. Pasternack can also expertly build your custom cable assemblies for you and ship same-day.

Electrical Specifications

Description	Minimum	Typical	Maximum	Units
Frequency Range	DC		6	GHz
VSWR			1.2:1	
Insertion Loss			0.12	dB
Operating Voltage (AC)			500	Vrms
Dielectric Withstanding Voltage (AC)			1,500	Vrms
Insulation Resistance	5,000			MOhms

Click the following link (or enter part number in "SEARCH" on website) to obtain additional part information including price, inventory and certifications: QN Male Snap-On Connector Crimp/Solder Attachment for LMR-240, PE-C240 PE45222

Pasternack Enterprises, Inc. • P.O. Box 16759, Irvine, CA 92623
Phone: (866) 727-8376 or (949) 261-1920 • **Fax:** (949) 261-7451
Sales@Pasternack.com • Techsupport@Pasternack.com

© 2018 Pasternack Enterprises All Rights Reserved

QN Male Snap-On Connector Crimp/Solder Attachment for LMR-240, PE-C240

Electrical Specification Notes:
Insertion Loss Calculation: .048 vF(GHz) dB

Mechanical Specifications

Size

Length	1.38 in [35.05 mm]
Width/Dia.	0.75 in [19.05 mm]
Weight	0.042 lbs [19.05 g]
Mating Cycles	100 Cycles

Material Specifications

Description	Material	Plating
Contact	Brass	Silver
Insulation	PTFE	
Body	Brass	Tri-Metal
Coupling Nut	Brass	Tri-Metal

Environmental Specifications

Temperature

Operating Range	-55 to +125 deg C
Hermetic Seal	ATM. cm3/s

Compliance Certifications (see product page for current document)

Plotted and Other Data

Notes:

Click the following link (or enter part number in "SEARCH" on website) to obtain additional part information including price, inventory and certifications: QN Male Snap-On Connector Crimp/Solder Attachment for LMR-240, PE-C240 PE45222

Pasternack Enterprises, Inc. • P.O. Box 16759, Irvine, CA 92623
Phone: (866) 727-8376 or (949) 261-1920 • **Fax:** (949) 261-7451
Sales@Pasternack.com • Techsupport@Pasternack.com

© 2018 Pasternack Enterprises All Rights Reserved

QN Male Snap-On Connector Crimp/Solder Attachment for LMR-240, PE-C240

RF Connectors
Technical Data Sheet

PE45222

QN Male Snap-On Connector Crimp/Solder Attachment for LMR-240, PE-C240 from Pasternack Enterprises has same day shipment for domestic and International orders. Our RF, microwave and millimeter wave products maintain a 99.4% availability and are part of the broadest selection in the industry.

Click the following link (or enter part number in “SEARCH” on website) to obtain additional part information including price, inventory and certifications: QN Male Snap-On Connector Crimp/Solder Attachment for LMR-240, PE-C240 PE45222

URL: https://www.pasternack.com/qn-male-snap-on-lmr-240-pe-c240-connector-pe45222-p.aspx

The information contained in this document is accurate to the best of our knowledge and representative of the part described herein. It may be necessary to make modifications to the part and/or the documentation of the part, in order to implement improvements. Pasternack reserves the right to make such changes as required. Unless otherwise stated, all specifications are nominal. Pasternack does not make any representation or warranty regarding the suitability of the part described herein for any particular purpose, and Pasternack does not assume any liability arising out of the use of any part or documentation.

Pasternack Enterprises, Inc. • P.O. Box 16759, Irvine, CA 92623
Phone: (866) 727-8376 or (949) 261-1920 • **Fax:** (949) 261-7451
Sales@Pasternack.com • Techsupport@Pasternack.com

© 2018 Pasternack Enterprises All Rights Reserved

PE45222 CAD Drawing

QN Male Snap-On Connector Crimp/Solder Attachment for LMR-240, PE-C240

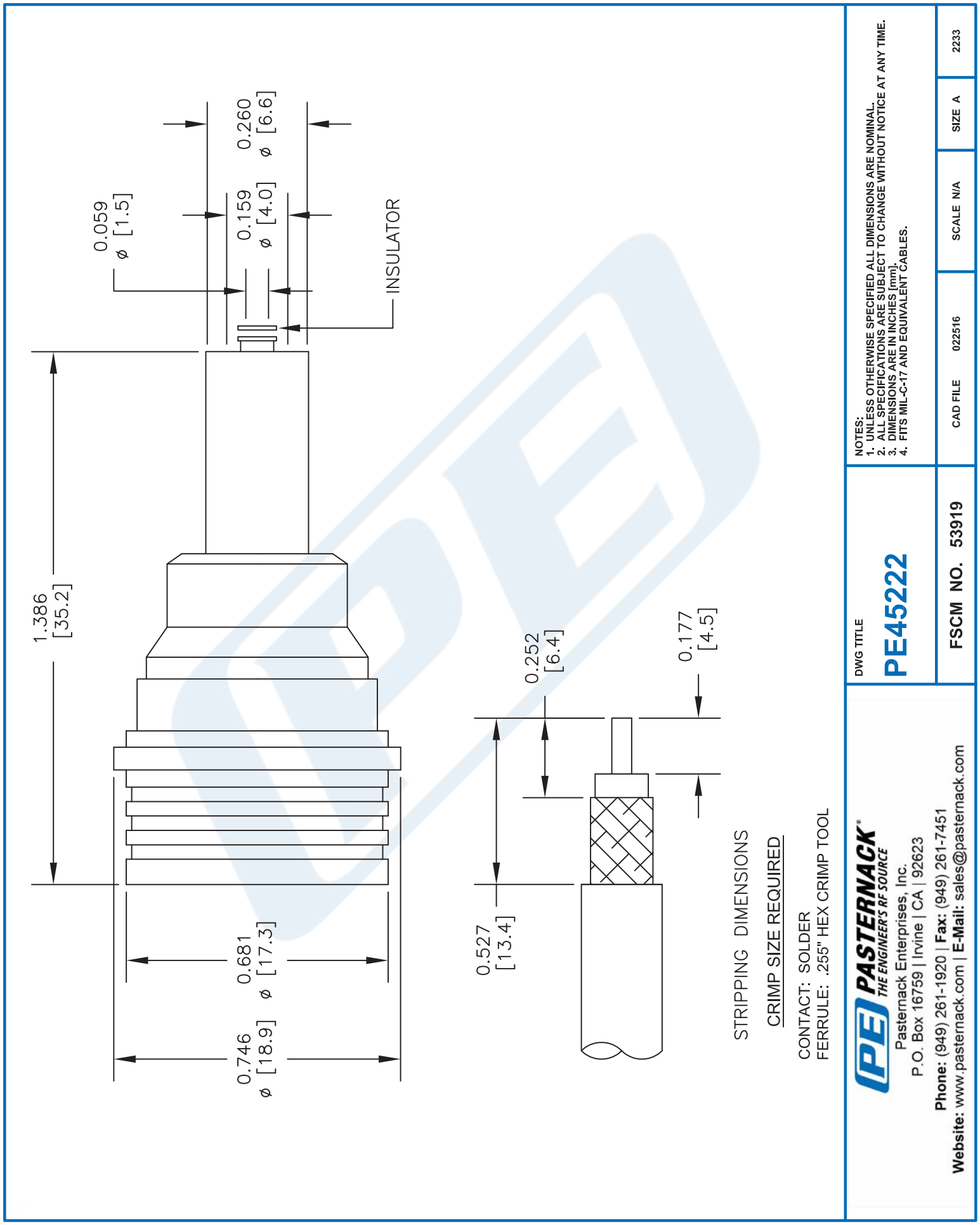

© 2018 Pasternack Enterprises All Rights Reserved

BNC Male Right Angle Connector Crimp/Solder Attachment for PE-C240, RG8X, 0.240 inch, LMR-240, LMR-240-DB, LMR-240-UF, B7808A

RF Connectors Technical Data Sheet PE44641

Configuration

- BNC Male Connector
- 50 Ohms
- Right Angle Body Geometry
- PE-C240, RG8X, 0.240 inch, LMR-240, LMR-240-DB, LMR-240-UF, B7808A Interface Type
- Crimp/Solder Attachment

Features

- Max. Operating Frequency 4 GHz
- Gold Plated Brass Contact

Applications

- General Purpose Test
- Custom Cable Assemblies

Description

Pasternack's PE44641 BNC male right angle connector with crimp/solder attachment for PE-C240, RG8X, 0.240 inch, LMR-240, LMR-240-DB, LMR-240-UF and B7808A is part of our full line of RF components available for same-day shipping. Our BNC male connector operates up to a maximum frequency of 4 GHz. Its right angle body geometry allows for easier connections in tight spaces.

Our BNC male right angle connector PE44641 datasheet specifications and drawing with dimensions are shown below in this PDF. Pasternack's broad catalog of RF, microwave and millimeter wave connectors allows designers to configure and customize their signal connections however they like. Whether the need is to provide an I/O for a board design, or simply create a custom cable assembly configuration, Pasternack has the right connector for the job. Pasternack can also expertly build your custom cable assemblies for you and ship same-day.

Electrical Specifications

Description	Minimum	Typical	Maximum	Units
Frequency Range	DC		4	GHz

Mechanical Specifications

Size

Length	1.103 in [28.02 mm]
Width/Dia.	0.571 in [14.50 mm]
Height	1.052 in [26.72 mm]
Weight	0.047 lbs [21.32 g]

Click the following link (or enter part number in "SEARCH" on website) to obtain additional part information including price, inventory and certifications: BNC Male Right Angle Connector Crimp/Solder Attachment for PE-C240, RG8X, 0.240 inch, LMR-240, LMR-240-DB, LMR-240-UF, B7808A PE44641

Pasternack Enterprises, Inc. • P.O. Box 16759, Irvine, CA 92623
Phone: (866) 727-8376 or (949) 261-1920 • **Fax:** (949) 261-7451
Sales@Pasternack.com • Techsupport@Pasternack.com

© 2016 Pasternack Enterprises All Rights Reserved

BNC Male Right Angle Connector Crimp/Solder Attachment for PE-C240, RG8X, 0.240 inch, LMR-240, LMR-240-DB, LMR-240-UF, B7808A

Material Specifications

Description	Material	Plating
Contact	Brass	Gold
Insulation	PTFE	
Body	Brass	Nickel
Coupling Nut	Brass	Nickel

Environmental Specifications

Temperature

Operating Range -40 to +85 deg C

Compliance Certifications (see product page for current document)

Plotted and Other Data

Notes:

BNC Male Right Angle Connector Crimp/Solder Attachment for PE-C240, RG8X, 0.240 inch, LMR-240, LMR-240-DB, LMR-240-UF, B7808A from Pasternack Enterprises has same day shipment for domestic and International orders. Our RF, microwave and millimeter wave products maintain a 99% availability and are part of the broadest selection in the industry.

Click the following link (or enter part number in "SEARCH" on website) to obtain additional part information including price, inventory and certifications: BNC Male Right Angle Connector Crimp/Solder Attachment for PE-C240, RG8X, 0.240 inch, LMR-240, LMR-240-DB, LMR-240-UF, B7808A PE44641

URL: https://www.pasternack.com/bnc-male-standard-rg8x-pe-c240-0.240-connector-pe44641-p.aspx

The information contained in this document is accurate to the best of our knowledge and representative of the part described herein. It may be necessary to make modifications to the part and/or the documentation of the part, in order to implement improvements. Pasternack reserves the right to make such changes as required. Unless otherwise stated, all specifications are nominal. Pasternack does not make any representation or warranty regarding the suitability of the part described herein for any particular purpose, and Pasternack does not assume any liability arising out of the use of any part or documentation.

Pasternack Enterprises, Inc. • P.O. Box 16759, Irvine, CA 92623
Phone: (866) 727-8376 or (949) 261-1920 • **Fax:** (949) 261-7451
Sales@Pasternack.com • Techsupport@Pasternack.com

© 2016 Pasternack Enterprises All Rights Reserved

PE44641 CAD Drawing

BNC Male Right Angle Connector Crimp/Solder Attachment for PE-C240, RG8X, 0.240 inch, LMR-240, LMR-240-DB, LMR-240-UF, B7808A

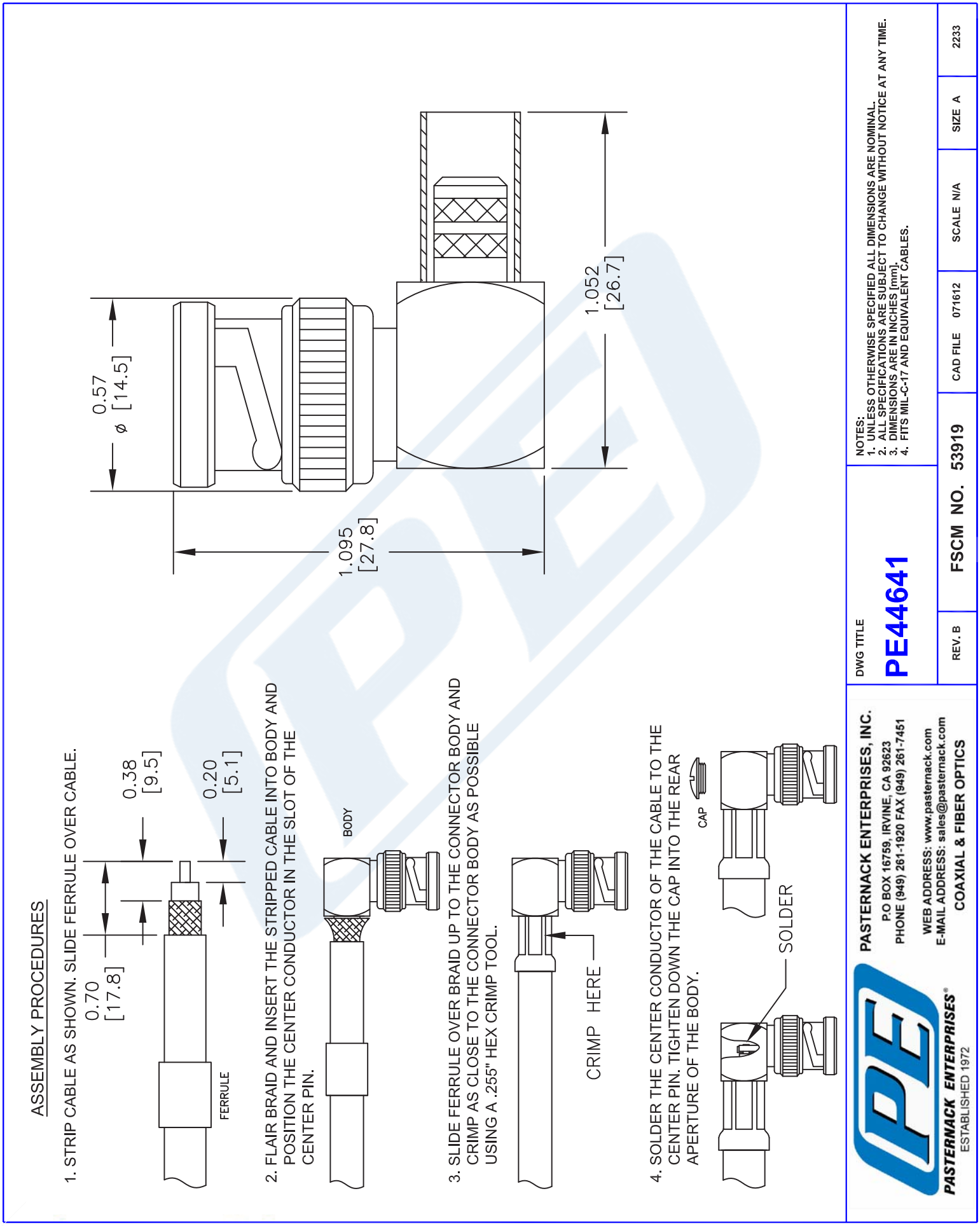

© 2016 Pasternack Enterprises All Rights Reserved

TIMES MICROWAVE SYSTEMS

LMR®-240-UF
UltraFlex Communications Coax

Ideal for...

- Jumper Assemblies in Wireless Communications Systems
- Short Antenna Feeder runs (e.g. WLL, GPS, LMR, Mobile Antennas)
- Any application that requires periodic/repeated flexing

- **LMR®- UltraFlex** has a stranded center conductor and rubber outer jacket designed for multiple bending/flexing cycles. It is used for both indoor and outdoor applications.

- **Flexibility** and bendability are hallmarks of the LMR-240-UF cable design. The flexible outer conductor enables the tightest bend radius available for any cable of similar size and performance.
- **Low Loss** is another hallmark feature of LMR-240-UF. Size for size LMR has the lowest loss of any flexible cable and comparable loss to semirigid hard-line cables.
- **RF Shielding** is 50 dB greater than typical single shielded coax (40 dB). The multi-ply bonded foil outer conductor is rated conservatively at > 90 dB (i.e. >180 dB between two adjacent cables).
- **Weatherability:** LMR-240-UF cables are designed for outdoor exposure and have a life expectancy in excess of 10 years.
- **Connectors:** A wide variety of connectors are available for LMR-240-UF cable, including all common interface types, reverse polarity, and solder-on center pins. Most LMR connectors employ crimp outer attachment using standard hex crimp sizes.
- **Cable Assemblies:** All LMR-240-UF cable types are available as pre-terminated cable assemblies. Refer to the section on FlexTech for further details.

Construction Specifications

Description	Material	In.	(mm)
Inner Conductor	Stranded BC	0.056	(1.42)
Dielectric	Foam Polyethylene	0.150	(3.81)
Outer Conductor	Aluminum Tape	0.155	(3.94)
Overall Braid	Tinned Copper	0.178	(4.52)
Jacket	Black Thermoplastic Elastomer	0.240	(6.10)

Mechanical Specifications

Performance Property	Units	US	(metric)
Bend Radius: installation	in. (mm)	0.75	(19.1)
Bend Radius: repeated	in. (mm)	2.5	(63.5)
Bending Moment	ft-lb (N-m)	0.125	(0.17)
Weight	lb/ft (kg/m)	0.034	(0.05)
Tensile Strength	lb (kg)	80	(36.3)
Flat Plate Crush	lb/in. (kg/mm)	13	(0.23)

Environmental Specifications

Performance Property	°F	°C
Installation Temperature Range	-40/+185	-40/+85
Storage Temperature Range	-94/+185	-70/+85
Operating Temperature Range	-40/+185	-40/+85

Electrical Specifications

Performance Property	Units	US	(metric)
Velocity of Propagation	%	84	
Dielectric Constant	NA	1.42	
Time Delay	nS/ft (nS/m)	1.21	(3.97)
Impedance	ohms	50	
Capacitance	pF/ft (pF/m)	24.2	(79.4)
Inductance	uH/ft (uH/m)	0.060	(0.20)
Shielding Effectiveness	dB	>90	
DC Resistance			
Inner Conductor	ohms/1000ft (/km)	4.28	(14.1)
Outer Conductor	ohms/1000ft (/km)	3.89	(12.8)
Voltage Withstand	Volts DC	1500	
Jacket Spark	Volts RMS	5000	
Peak Power	kW	5.6	

Part Description

Part Number	Application	Jacket	Color	Stock Code
LMR-240-UF	Indoor/Outdoor	TPE	Black	54041

Attenuation vs. Frequency **(typical)**

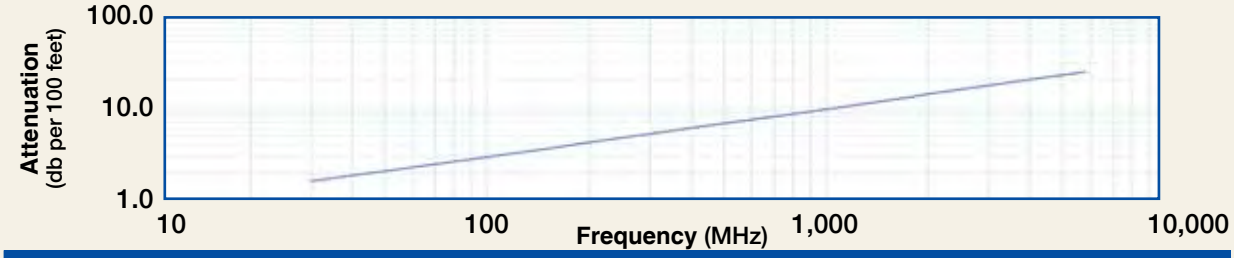

Frequency (MHz)	30	50	150	220	450	900	1500	1800	2000	2500	5800
Attenuation dB/100 ft	1.6	2.1	3.6	4.4	6.3	9.1	11.8	13.0	13.8	15.5	24.4
Attenuation dB/100 m	5.3	6.8	11.9	14.4	20.8	29.8	38.9	42.8	45.2	50.9	80.1
Avg. Power kW	1.24	0.96	0.55	0.45	0.31	0.22	0.17	0.15	0.14	0.13	0.08

Calculate Attenuation = (0.290501) • $\sqrt{FMHz}$ + (0.000396) • FMHz (interactive calculator available at http://www.timesmicrowave.com/cable_calculators)
Attenuation: VSWR=1.0; Ambient = +25°C (77°F) **Power:** VSWR=1.0; Ambient = +40°C; Inner Conductor = 100°C (212°F);
Sea Level; dry air; atmospheric pressure; no solar loading

1. TC-240-BMC 3190-242

2. TC-240-MUHF 3190-445

3. TC-240-NF-BH 3190-419

4. TC-240-NMH-D 3190-382

5. TC-240-NMC 3190-244

6. TC-240-SM 3190-380

7. TC-240-SM-RP 3190-326

8. TC-240-TM 3190-275

9. TC-240-NMH-RA-D 3190-2426

Connectors

Interface	Description	Part Number	Stock Code	VSWR** Freq. (GHz)	Coupling Nut	Inner Contact Attach	Outer Contact Attach	Finish* Body /Pin	Length in (mm)	Width in (mm)	Weight lb (g)
1. BNC Male	Straight Plug	TC-240-BMC	3190-242	<1.25:1 (2.5)	Knurl	Solder	Clamp	S/G	1.7 (43)	0.56(14.2)	0.040 (18.1)
2. Mini-UHF	Straight Plug	TC-240-MUHF	3190-445	<1.25:1 (2.5)	Knurl	Solder	Crimp	N/G	1.1 (28)	0.45(11.4)	0.014 (6.4)
3. N Female	Bulkhead Jack	TC-240-NF-BH	3190-419	<1.25:1 (2.5)	NA	Solder	Crimp	A/G	1.7 (44)	0.88(22.2)	0.115 (52.2)
4. N Male	Straight Plug	TC-240-NMH-D	3190-382	<1.25:1 (2.5)	Hex	Solder	Crimp	N/S	1.5 (38)	0.75(19.1)	0.086 (39.0)
5. N Male	Straight Plug	TC-240-NMC	3190-244	<1.25:1 (2.5)	Knurl	Solder	Clamp	S/G	1.5 (38)	0.75(19.1)	0.082 (37.2)
6. SMA Male	Straight Plug	TC-240-SM	3190-380	<1.25:1 (10)	Hex	Solder	Crimp	SS/G	1.0 (25)	0.32(8.1)	0.016 (7.3)
7. SMA Male	Reverse Polarity	TC-240-SM-RP	3190-326	<1.25:1 (2.5)	Hex	Solder	Crimp	SS/G	1.0 (25)	0.32(8.1)	0.016 (7.3)
8. TNC Male	Straight Plug	TC-240-TM	3190-275	<1.25:1 (2.5)	Knurl	Solder	Crimp	N/S	1.7 (43)	0.59(15.0)	0.043 (19.5)
9. N Male	Right Angle	TC-240-NMH-RA-D	3190-2426	<1.35:1 (6)	Hex/Knurl	Solder	Crimp	A/G	1.2 (32.4)	1.22 (31.0)	0.091 (41.7)

* Finish metals: N=Nickel, S=Silver, G=Gold, SS=Stainless Steel, A=Alballoy **VSWR spec based on 3 foot cable with a connector pair

Hardware Accessories

Type	Part Number	Stock Code	Description
Ground Kit	GK-S240TT	GK-S240TT	Standard Ground Kit (each)

GK-S240TT

CCT-01 3190-1544

Install Tools

Type	Part Number	Stock Code	Description
Crimp Tool	CT-240/200/195/100	3190-667	Crimp tool for LMR-100, 195, 200 and 240 connectors
Cutting Tool	CCT-01	3190-1544	Cable end flush cut tool
Replacement Blade	RB-01	3190-1609	Replacement blade for cutting tool

CT-240/200/195/100 3190-667