PASTERNACK
an INFINITE brand

QMA Male QD Connector Crimp/Non-Solder Contact Attachment for LMR-240, LMR-240-DB, LMR-240-UF, LMR-240-FR, RG8X, PE-C240

RF Connectors
Technical Data Sheet

TIMES MICROWAVE SYSTEMS An Amphenol Company

EZ-240-QM-X

Times Microwave Systems Connector Specification

Configuration

- QD QMA Male Connector
- 50 Ohms
- Straight Body Geometry
- Connector Interface Types: LMR-240, LMR-240-DB, LMR-240-UF, LMR-240-FR, RG8X, PE-C240

Features

- Max. Operating Frequency 8 GHz
- Good VSWR of 1.3:1
- Gold Plated Beryllium Copper Contact
- 50 µin minimum contact plating

Applications

- General Purpose Test
- Custom Cable Assemblies

Description

EZ-240-QM-X QMA male coaxial connector has an interface type of QMA male LMR-240, LMR-240-DB, LMR-240-UF, LMR-240-FR, RG8X, and PE-C240 and a 50 Ohms impedance. Pasternack's QMA male connector uses crimp/non-solder contact as an attachment method. Our male QMA coaxial connector provides a maximum frequency of 8 GHz.

The Pasternack QMA male coaxial connector has a PTFE dielectric type and a VSWR of 1.3:1. Pasternack's QMA coaxial connector has a brass body with tri-metal plating. Our EZ-240-QM-X QMA connector uses a gold plated beryllium copper contact. Additional RF connector specs and dimensions for this component can be found on its PDF specification datasheet and CAD drawings above.

The radio frequency connector is made from brass material and has a contact life of 100 cycles or more. Our high-quality EZ-240-QM-X features an 80 µin minimum body plating specification. The Pasternack EZ-240-QM-X QMA connector operates at a temperature range of -40 to 125 deg C.

This Pasternack male QMA connector will ship the same business day as purchased. Our QMA male connector is part of over 40,000 RF, microwave, and millimeter wave components in stock for local, domestic, and international shipment. For further information on similar products, our expert technical support and trained sales team can get you the ideal RF connector as per your requirements.

Electrical Specifications

Description	Minimum	Typical	Maximum	Units
Frequency Range	DC		8	GHz
VSWR			1.3:1	
Insertion Loss			0.28	dB
Impedance		50		Ohms
Dielectric Withstanding Voltage (DC)			1,000	Vdc
Insulation Resistance	5,000			MOhms

Electrical Specification Notes:
Insertion Loss is 0.1*SQRT(fGHz) dB

Click the following link (or enter part number in "SEARCH" on website) to obtain additional part information including price, inventory and certifications: QMA Male QD Connector Crimp/Non-Solder Contact Attachment for LMR-240, LMR-240-DB, LMR-240-UF, LMR-240-FR, RG8X, PE-C240 EZ-240-QM-X

Pasternack Enterprises, Inc. • P.O. Box 16759, Irvine, CA 92623
Phone: (866) 727-8376 or (949) 261-1920 • **Fax:** (949) 261-7451
Sales@Pasternack.com • Techsupport@Pasternack.com

© 2020 Pasternack Enterprises All Rights Reserved

QMA Male QD Connector Crimp/Non-Solder Contact Attachment for LMR-240, LMR-240-DB, LMR-240-UF, LMR-240-FR, RG8X, PE-C240

Mechanical Specifications

Size

Length	1.07 in [27.28 mm]
Width	0.41 in [10.49 mm]
Height	0.41 in [10.49 mm]
Weight	0.10 lbs [45.36 g]
Mating Cycles	100 Cycles
Cable Retention Force	250 lbs 113.4 kg

Material Specifications

Description	Material	Plating
Contact	Beryllium Copper	Gold 50 µin minimum
Insulation	PTFE	
Body	Brass	Tri-Metal 80 µin minimum
Coupling Nut	Brass	Tri-Metal 80 µin minimum
Gasket	Silicone	
Crimp Sleeve	Brass	Tri-Metal 80 µin minimum

Environmental Specifications

Temperature

Operating Range	-40 to +125 deg C
Shock	MIL-STD 202G, Meth.213, Cond I
Vibration	MIL-STD 202G, Meth.204, Cond.D
Thermal Shock	MIL-STD 202G, Meth.107, Cond.B

Compliance Certifications (see product page for current document)

Plotted and Other Data

Notes:

Click the following link (or enter part number in “SEARCH” on website) to obtain additional part information including price, inventory and certifications: QMA Male QD Connector Crimp/Non-Solder Contact Attachment for LMR-240, LMR-240-DB, LMR-240-UF, LMR-240-FR, RG8X, PE-C240 EZ-240-QM-X

Pasternack Enterprises, Inc. • P.O. Box 16759, Irvine, CA 92623
Phone: (866) 727-8376 or (949) 261-1920 • **Fax:** (949) 261-7451
Sales@Pasternack.com • Techsupport@Pasternack.com

© 2020 Pasternack Enterprises All Rights Reserved

QMA Male QD Connector Crimp/Non-Solder Contact Attachment for LMR-240, LMR-240-DB, LMR-240-UF, LMR-240-FR, RG8X, PE-C240

RF Connectors
Technical Data Sheet

TIMES MICROWAVE SYSTEMS An Amphenol Company

EZ-240-QM-X

QMA Male QD Connector Crimp/Non-Solder Contact Attachment for LMR-240, LMR-240-DB, LMR-240-UF, LMR-240-FR, RG8X, PE-C240 from Pasternack Enterprises has same day shipment for domestic and International orders. Our RF, microwave and millimeter wave products maintain a 99.4% availability and are part of the broadest selection in the industry.

Click the following link (or enter part number in “SEARCH” on website) to obtain additional part information including price, inventory and certifications: QMA Male QD Connector Crimp/Non-Solder Contact Attachment for LMR-240, LMR-240-DB, LMR-240-UF, LMR-240-FR, RG8X, PE-C240 EZ-240-QM-X

URL: https://www.pasternack.com/qma-male-qd-lmr-240-lmr-240-db-connector-ez-240-qm-x-p.aspx

The information contained in this document is accurate to the best of our knowledge and representative of the part described herein. It may be necessary to make modifications to the part and/or the documentation of the part, in order to implement improvements. Pasternack reserves the right to make such changes as required. Unless otherwise stated, all specifications are nominal. Pasternack does not make any representation or warranty regarding the suitability of the part described herein for any particular purpose, and Pasternack does not assume any liability arising out of the use of any part or documentation.

Pasternack Enterprises, Inc. • P.O. Box 16759, Irvine, CA 92623
Phone: (866) 727-8376 or (949) 261-1920 • **Fax:** (949) 261-7451
Sales@Pasternack.com • Techsupport@Pasternack.com

© 2020 Pasternack Enterprises All Rights Reserved

TIMES MICROWAVE SYSTEMS EZ-240-QM-X CAD Drawing

QMA Male QD Connector Crimp/Non-Solder Contact Attachment for LMR-240, LMR-240-DB, LMR-240-UF, LMR-240-FR, RG8X, PE-C240

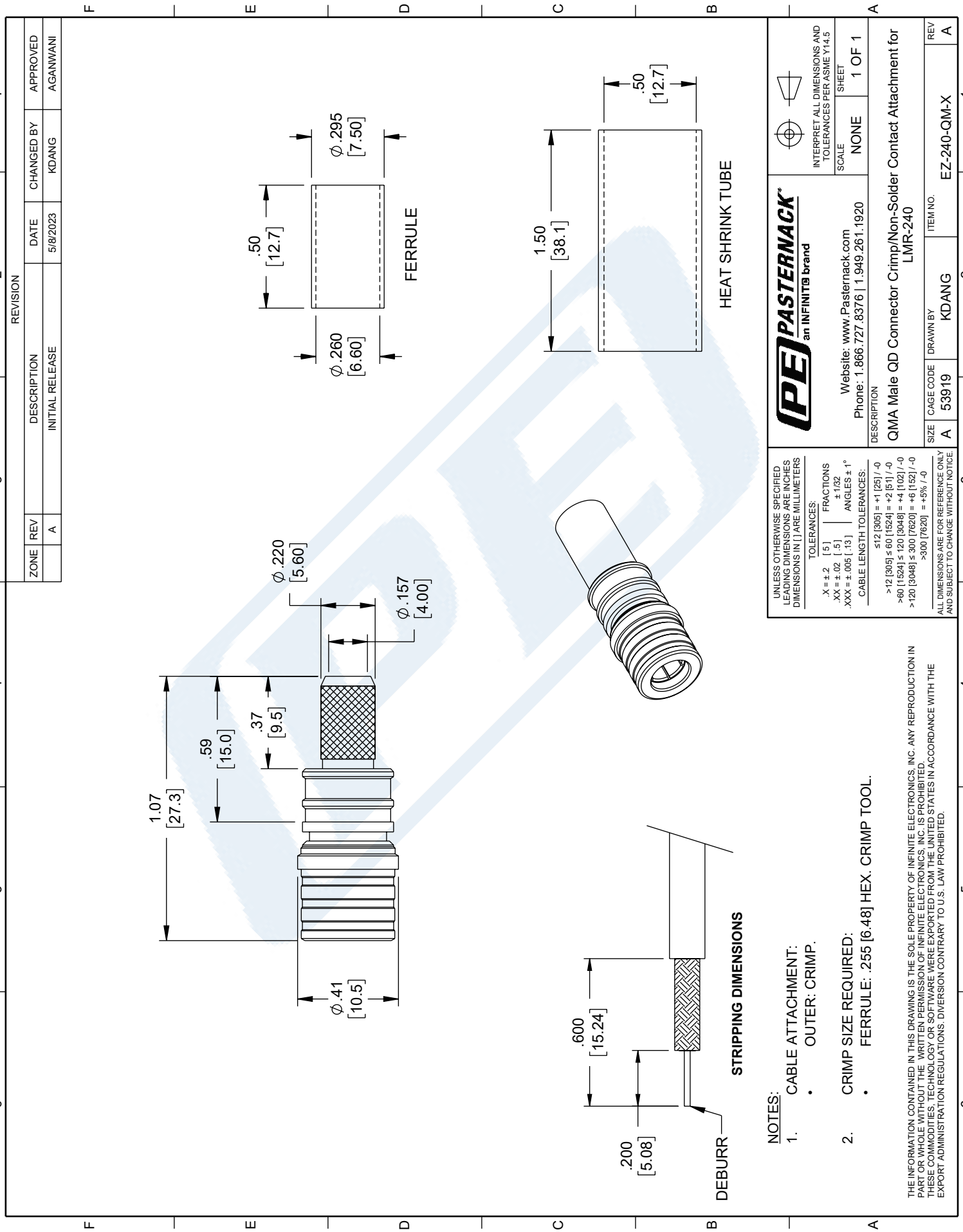

© 2020 Pasternack Enterprises All Rights Reserved

PASTERNACK
an INFINITE brand

TNC Male Connector Crimp/Solder Attachment for PE-C240, RG8X, .240 inch, LMR-240, LMR-240-DB, LMR-240-UF, B7808A

RF Connectors
Technical Data Sheet

PE44634

Configuration

- TNC Male Connector
- 50 Ohms
- Straight Body Geometry
- Connector Interface Types: PE-C240, RG8X, .240 inch, LMR-240, LMR-240-DB, LMR-240-UF, B7808A

Features

- Max. Operating Frequency 11 GHz
- Gold Plated Brass Contact

Applications

- General Purpose Test
- Custom Cable Assemblies

Description

Pasternack's PE44634 TNC male connector with crimp/solder attachment for PE-C240, RG8X, .240 inch, LMR-240, LMR-240-DB, LMR-240-UF and B7808A is part of our full line of RF components available for same-day shipping. Our TNC male connector operates up to a maximum frequency of 11 GHz.

Our TNC male connector PE44634 datasheet specifications and drawing with dimensions are shown below in this PDF. Pasternack's broad catalog of RF, microwave and millimeter wave connectors allows designers to configure and customize their signal connections however they like. Whether the need is to provide an I/O for a board design, or simply create a custom cable assembly configuration, Pasternack has the right connector for the job. Pasternack can also expertly build your custom cable assemblies for you and ship same-day.

Electrical Specifications

Description	Minimum	Typical	Maximum	Units
Frequency Range	DC		11	GHz
Operating Voltage (AC)			500	Vrms
Dielectric Withstanding Voltage (AC)			1,500	Vrms

Mechanical Specifications

Size

Length	1.172 in [29.77 mm]
Width/Dia.	0.59 in [14.99 mm]
Weight	0.032 lbs [14.51 g]

Click the following link (or enter part number in "SEARCH" on website) to obtain additional part information including price, inventory and certifications: TNC Male Connector Crimp/Solder Attachment for PE-C240, RG8X, .240 inch, LMR-240, LMR-240-DB, LMR-240-UF, B7808A PE44634

Pasternack Enterprises, Inc. • P.O. Box 16759, Irvine, CA 92623
Phone: (866) 727-8376 or (949) 261-1920 • **Fax:** (949) 261-7451
Sales@Pasternack.com • Techsupport@Pasternack.com

© 2019 Pasternack Enterprises All Rights Reserved

TNC Male Connector Crimp/Solder Attachment for PE-C240, RG8X, .240 inch, LMR-240, LMR-240-DB, LMR-240-UF, B7808A

Material Specifications

Description	Material	Plating
Contact	Brass	Gold
Insulation	POM	
Body	Brass	Nickel

Environmental Specifications

Temperature

Operating Range -40 to +85 deg C

Compliance Certifications (see product page for current document)

Plotted and Other Data

Notes:

TNC Male Connector Crimp/Solder Attachment for PE-C240, RG8X, .240 inch, LMR-240, LMR-240-DB, LMR-240-UF, B7808A from Pasternack Enterprises has same day shipment for domestic and International orders. Our RF, microwave and millimeter wave products maintain a 99.4% availability and are part of the broadest selection in the industry.

Click the following link (or enter part number in “SEARCH” on website) to obtain additional part information including price, inventory and certifications: TNC Male Connector Crimp/Solder Attachment for PE-C240, RG8X, .240 inch, LMR-240, LMR-240-DB, LMR-240-UF, B7808A PE44634

URL: https://www.pasternack.com/tnc-male-standard-rg8x-pe-c240-0.240-connector-pe44634-p.aspx

The information contained in this document is accurate to the best of our knowledge and representative of the part described herein. It may be necessary to make modifications to the part and/or the documentation of the part, in order to implement improvements. Pasternack reserves the right to make such changes as required. Unless otherwise stated, all specifications are nominal. Pasternack does not make any representation or warranty regarding the suitability of the part described herein for any particular purpose, and Pasternack does not assume any liability arising out of the use of any part or documentation.

Pasternack Enterprises, Inc. • P.O. Box 16759, Irvine, CA 92623
Phone: (866) 727-8376 or (949) 261-1920 • **Fax:** (949) 261-7451
Sales@Pasternack.com • Techsupport@Pasternack.com

© 2019 Pasternack Enterprises All Rights Reserved

PE44634 CAD Drawing

TNC Male Connector Crimp/Solder Attachment for PE-C240, RG8X, .240 inch, LMR-240, LMR-240-DB, LMR-240-UF, B7808A

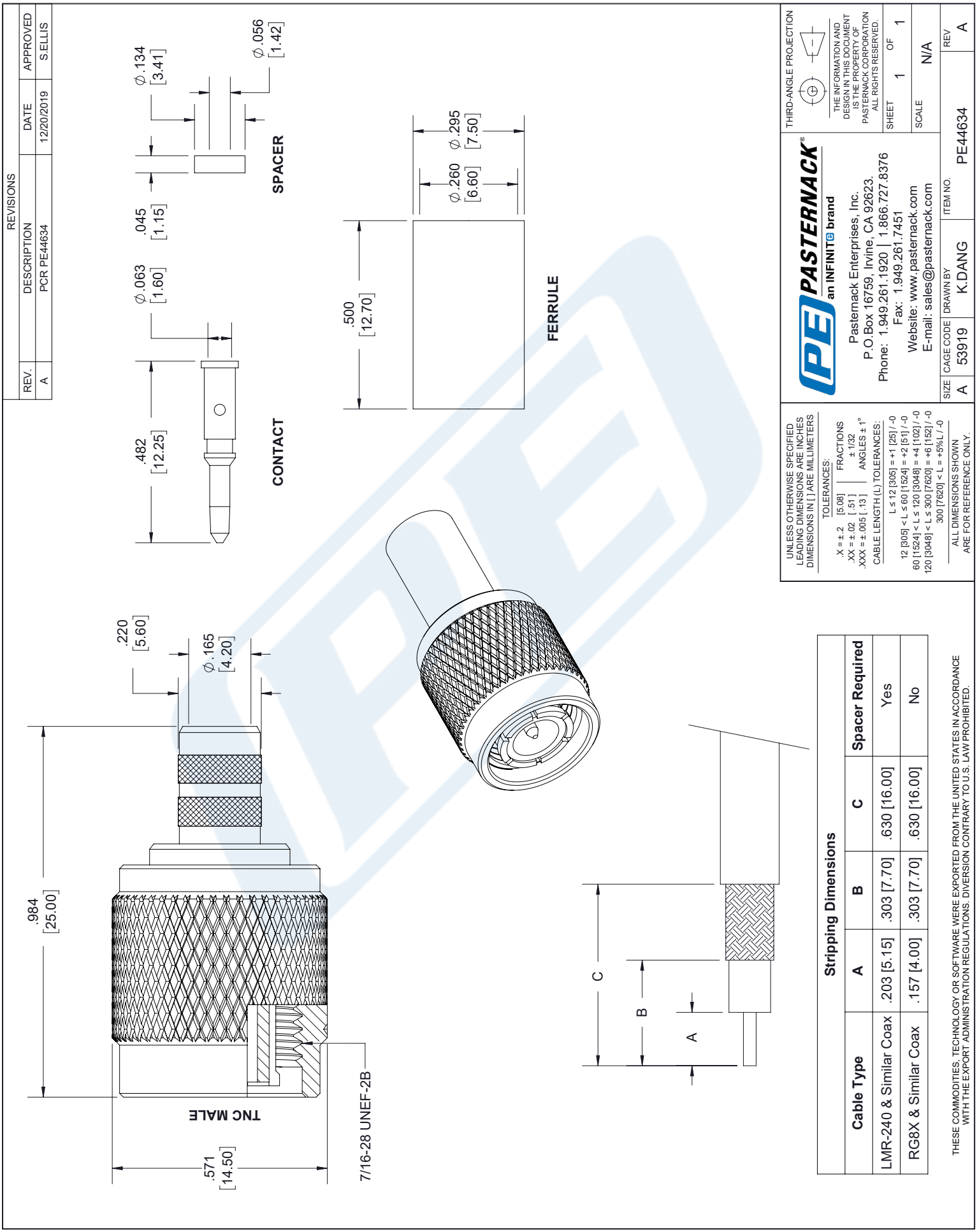

© 2019 Pasternack Enterprises All Rights Reserved

LMR-240-FR Fire Rated version of the 240 series Low Loss Coax

RF Cables
Technical Data Sheet

LMR-240-FR

Times Microwave Systems Coax Cable Specification

Configuration

- Low Loss, Outdoor Flexible Cable
- 2 Shield(s)

Features

- CMR Riser Rated Coax
- Non-Halogen, Low Smoke FRPE Jacket
- Max Operating Frequency of 5.8 GHz
- Phase Velocity 83% VoP
- Max Operating Temperature +85°C
- Min Install Bend Radius of 0.75 inches

Applications

- In-Building Riser Runs
- Short Antenna Installs
- RF Test Systems
- General Purpose RF Interconnect
- Laboratory Applications

Description

LMR-240-FR Fire Rated version of the 240 series Low Loss Coax from Times Microwave is part of the large product offering by Pasternack of radio frequency coaxial cable types specifically stocked to be ready for same-day shipment. Pasternack LMR-240-FR coax cable is manufactured in a flexible design and has a 50 Ohm impedance. This low loss and CMR riser rated 50 Ohm coax cable LMR-240-FR is constructed with a 0.240 inch diameter and Black FRPE jacket.

LMR-240-FR flexible 50 Ohm coax cable with FRPE jacket is rated for a 5.8 GHz maximum operating frequency. This 50 Ohm 0.240 inch diameter and low loss fire rated coax cable is built with an aluminum double shield count and RF shielding of 90 dB. Times Microwave LMR-240-FR FRPE coax is constructed with Foam PE dielectric and a maximum operating temperature of 85 degrees C. Pasternack's offering of LMR-240-FR coax cable provides specs for this wire on its RF coax cable LMR-240-FR datasheet.

LMR-240-FR cable is part of more than one million RF, microwave parts in stock at Pasternack. This Times Microwave low loss flexible LMR-240-FR coax cable is ready to buy and can be shipped worldwide. Pasternack also maintains a wide selection of other radio frequency coaxial cable types that ship same-day from our warehouse as with the rest of our other RF/microwave components.

* LMR™ is a trademark of Times Microwave Systems.

Electrical Specifications

Description	Minimum	Typical	Maximum	Units
Frequency Range	DC		5.8	GHz
Impedance		50		Ohms
Velocity of Propagation		83		%
Time Delay		1.21 3.97		ns/ft ns/m
Shielding Effectiveness	90			dB
Dielectric Withstanding Voltage (DC)			1,500	Vdc

Click the following link (or enter part number in "SEARCH" on website) to obtain additional part information including price, inventory and certifications: LMR-240-FR Fire Rated version of the 240 series Low Loss Coax LMR-240-FR

Pasternack Enterprises, Inc. • P.O. Box 16759, Irvine, CA 92623
Phone: (866) 727-8376 or (949) 261-1920 • **Fax:** (949) 261-7451
Sales@Pasternack.com • Techsupport@Pasternack.com

© 2020 Pasternack Enterprises All Rights Reserved

LMR-240-FR Fire Rated version of the 240 series Low Loss Coax

Jacket Spark		5,000	Vrms
Inner Conductor DC Resistance		3.2	Ohms/1000ft
Outer Conductor DC Resistance		3.89	Ohms/1000ft
Nominal Capacitance	24.2 [79.4]		pF/ft [pF/m]
Nominal Inductance	0.06 [0.2]		uH/ft [uH/m]
Input Power (Peak)		5.6	kWatts

Performance by Frequency Band

Description	F1	F2	F3	F4	F5	Units
Frequency	50	150	220	450	900	MHz
Attenuation, Typ	1.7	3	3.7	5.3	7.6	dB/100ft
	5.58	9.84	12.14	17.39	24.93	dB/100m
Input Power (CW), Max	1,150	660	540	380	260	Watts

Description	F6	F7	F8	F9	F10	Units
Frequency	1.5	1.8	2	2.5	5.8	GHz
Attenuation, Typ	9.9	10.9	11.5	12.9	20.4	dB/100ft
	32.48	35.76	37.73	42.32	66.93	dB/100m
Input Power (CW), Max	200	180	170	150	100	Watts

Mechanical Specifications

Diameter	0.24 in 6.1 mm
Min. Bend Radius (Installation)	0.75 in [19.05 mm]
Min. Bend Radius (Repeated)	2.5 in [63.5 mm]
Bending Moment	0.25 lbs-ft [0.34 N-m]
Tensile Strength	80 lbs [36.29 kg
Flat Plate Crush	20 lbs/in [0.36 Kg/mm]

Construction Specifications

Description	Material and Plating	Diameter
Inner Conductor	Copper, 1 Strand	0.056 in [1.42 mm]
Conductor Type	Solid	

Click the following link (or enter part number in “SEARCH” on website) to obtain additional part information including price, inventory and certifications: LMR-240-FR Fire Rated version of the 240 series Low Loss Coax LMR-240-FR

Pasternack Enterprises, Inc. • P.O. Box 16759, Irvine, CA 92623
Phone: (866) 727-8376 or (949) 261-1920 • **Fax:** (949) 261-7451
Sales@Pasternack.com • Techsupport@Pasternack.com

© 2020 Pasternack Enterprises All Rights Reserved

LMR-240-FR Fire Rated version of the 240 series Low Loss Coax

Dielectric	Foam PE	0.15 in [3.81 mm]
First Shield	Aluminum Tape	[ ]
Second Shield	Tinned Copper	[ ]
Jacket	FRPE, Black	0.24 in [6.1 mm]

Environmental Specifications

Temperature

Operating Range	-40 to +85 deg C
Installation Range	-40 to +85 deg C
Storage Range	-70 to +85 deg C

Compliance Certifications (see product page for current document)

Plotted and Other Data

Notes:

LMR-240-FR Fire Rated version of the 240 series Low Loss Coax from Pasternack Enterprises has same day shipment for domestic and International orders. Our RF, microwave and millimeter wave products maintain a 99.4% availability and are part of the broadest selection in the industry.

Click the following link (or enter part number in “SEARCH” on website) to obtain additional part information including price, inventory and certifications: LMR-240-FR Fire Rated version of the 240 series Low Loss Coax LMR-240-FR

URL: https://www.pasternack.com/low-loss-flexible-lmr-240-fr-frpe-jacket-aluminum-tape-over-tinned-copper-outer-conductor-double-shielded-lmr-240-fr-p.aspx

The information contained in this document is accurate to the best of our knowledge and representative of the part described herein. It may be necessary to make modifications to the part and/or the documentation of the part, in order to implement improvements. Pasternack reserves the right to make such changes as required. Unless otherwise stated, all specifications are nominal. Pasternack does not make any representation or warranty regarding the suitability of the part described herein for any particular purpose, and Pasternack does not assume any liability arising out of the use of any part or documentation.

Pasternack Enterprises, Inc. • P.O. Box 16759, Irvine, CA 92623
Phone: (866) 727-8376 or (949) 261-1920 • **Fax:** (949) 261-7451
Sales@Pasternack.com • Techsupport@Pasternack.com

© 2020 Pasternack Enterprises All Rights Reserved

LMR-240-FR CAD Drawing

LMR-240-FR Fire Rated version of the 240 series Low Loss Coax

REVISIONS

REV.	DESCRIPTION	DATE	APPROVED
A	INITIAL RELEASE	06-04-2021	SELLIS

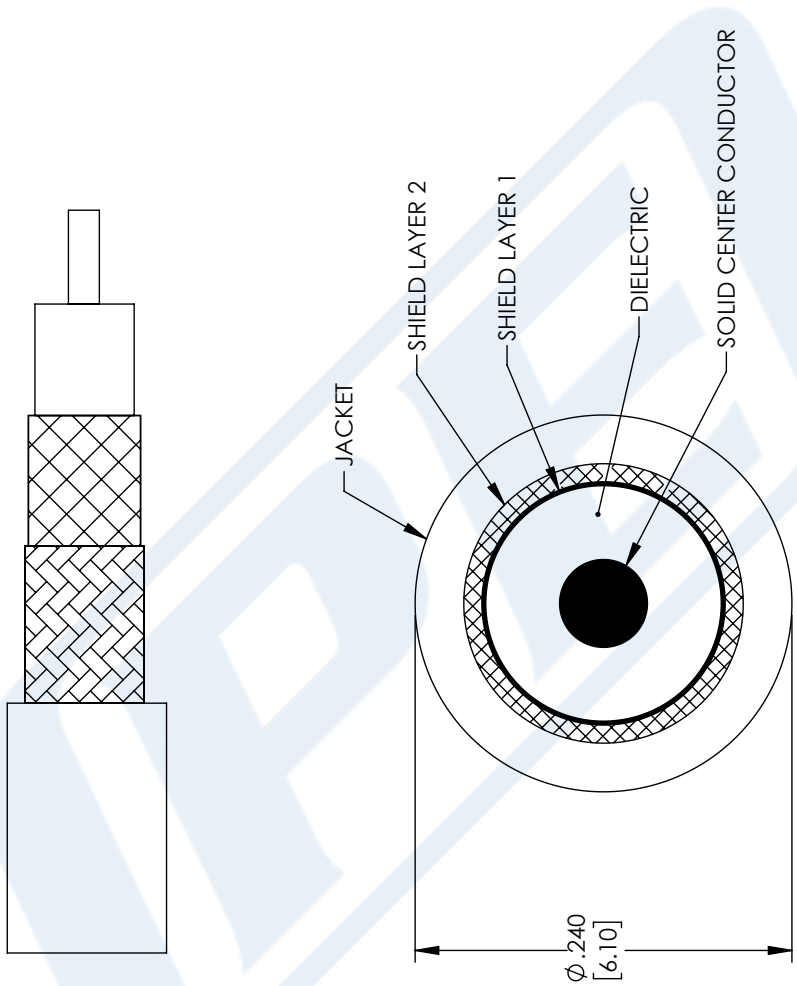

UNLESS OTHERWISE SPECIFIED
LEADING DIMENSIONS ARE INCHES
DIMENSIONS IN [ ] ARE MILLIMETERS

TOLERANCES:

.X = ± .2 [5.08] | FRACTIONS
.XX = ± .02 [.51] | ± 1/32
.XXX = ± .005 [.13] | ANGLES ± 1°

CABLE LENGTH (L) TOLERANCES:

L ≤ 12 [305] = +1 [25] / -0
12 [305] < L ≤ 60 [1524] = +2 [51] / -0
60 [1524] < L ≤ 120 [3048] = +4 [102] / -0
120 [3048] < L ≤ 300 [7620] = +6 [152] / -0
300 [7620] < L = +5%L / -0

ALL DIMENSIONS SHOWN ARE FOR REFERENCE ONLY.

PASTERNACK an INFINITE brand

Pasternack Enterprises, Inc.
P.O.Box 16759, Irvine, CA 92623.
Phone: 1.949.261.1920 | 1.866.727.8376
Fax: 1.949.261.7451
Website: www.pasternack.com
E-mail: sales@pasternack.com

THIRD-ANGLE PROJECTION

THE INFORMATION AND DESIGN IN THIS DOCUMENT IS THE PROPERTY OF PASTERNACK CORPORATION ALL RIGHTS RESERVED.

SHEET 1 OF 1
SCALE N/A

SIZE	CAGE CODE	DRAWN BY	ITEM NO.	REV
A	53919	MVEERAPPAN	LMR-240-FR	A

THESE COMMODITIES, TECHNOLOGY OR SOFTWARE WERE EXPORTED FROM THE UNITED STATES IN ACCORDANCE WITH THE EXPORT ADMINISTRATION REGULATIONS. DIVERSION CONTRARY TO U.S. LAW PROHIBITED.

T-Rev.D