PASTERNACK
an INFINITE brand

Mini SMP Male VITA 67 Connector Solder Attachment for PE-P047, PE-P047LL, PE-047SR, PE-SR047FL, PE-SR047AL

RF Connectors
Technical Data Sheet

PE45539

Configuration

- Mini SMP Male Connector
- 50 Ohms
- Straight Body Geometry
- Connector Interface Types: PE-P047, PE-P047LL, PE-047SR, PE-SR047FL, PE-SR047AL
- VITA 67 Design

Features

- Max. Operating Frequency 40 GHz
- Good VSWR of 1.45:1
- Gold Plated Beryllium Copper Contact
- Contact plating according to ASTM B488
- Blind Mate Connector
- Coaxial interconnects on VPX platforms
- Standard MIL-STD-348 SMPM interface
- Rugged Stainless Steel construction
- Accepts 0.047” and 0.086” cable contacts for end-to-end solution

Applications

- General Purpose Test
- Custom Cable Assemblies
- Robust and Rugged high speed cabled solution
- VITA 67 Backplane
- High Density Applications

Description

Pasternack’s PE45539 4-position block housing is part of our full line of VITA 67 Backplane solutions and is available for same-day shipping. Pasternack introduces 4 position (VITA 67.1) and 8 position (VITA 67.2) RF connector housings designed for 3U and 6U formats within the OpenVPX architecture. These blocks are machined from stainless steel for a rugged solution. The blocks are designed to accept both PE45535 (0.047” cable contact) & PE45536 (.086” cable contact) used in flexible or semi-rigid cables. These blocks are ideal for blind mating daughtercards to motherboards as the RF contacts provide +/- .010” radial misalignment tolerance and have excellent return loss up to 40 GHz.

The SMPM (Mini-SMP) blind mate connector is ideal for applications where direct visual or tactile access to the connection point is not possible, for example, when two circuit boards need to be mated. The block’s right angle body geometry allows for easier connections in tight spaces.

Our SMPM (Mini-SMP) right angle block PE45539 specifications and drawing with dimensions are shown below in this PDF. Pasternack’s broad catalog of RF, microwave and millimeter wave connectors allows designers to configure and customize their signal connections however they like. Whether the need is to provide an I/O for a board design, or simply create a custom cable assembly configuration, Pasternack has the right connector for the job. Pasternack can also expertly build your custom cable assemblies for you and ship same-day.

Electrical Specifications

Description	Minimum	Typical	Maximum	Units
Frequency Range	DC		40	GHz
VSWR			1.45:1	
Dielectric Withstanding Voltage (AC)			325	Vrms
Inner Conductor DC Resistance			6	mOhms
Outer Conductor DC Resistance			5	mOhms
Insulation Resistance	5,000			MOhms

Click the following link (or enter part number in “SEARCH” on website) to obtain additional part information including price, inventory and certifications: Mini SMP Male VITA 67 Connector Solder Attachment for PE-P047, PE-P047LL, PE-047SR, PE-SR047FL, PE-SR047AL PE45539

Pasternack Enterprises, Inc. • P.O. Box 16759, Irvine, CA 92623
Phone: (866) 727-8376 or (949) 261-1920 • **Fax:** (949) 261-7451
Sales@Pasternack.com • Techsupport@Pasternack.com

© 2020 Pasternack Enterprises All Rights Reserved

PASTERNACK
an INFINITE brand

Mini SMP Male VITA 67 Connector Solder Attachment for PE-P047, PE-P047LL, PE-047SR, PE-SR047FL, PE-SR047AL

RF Connectors
Technical Data Sheet

PE45539

Mechanical Specifications

Size

Length	0.42 in [10.67 mm]
Width/Dia.	0.19 in [4.83 mm]
Height	0.19 in [4.83 mm]
Weight	0.0016 lbs [0.73 g]
Mating Cycles	500 Cycles

Material Specifications

Description	Material	Plating
Contact	Beryllium Copper	Gold ASTM B488
Insulation	PEI	
Body	Brass	Gold ASTM B488
Retaining Ring	Beryllium Copper	Nickel SAE-AMS-QQ-N-290

Environmental Specifications

Temperature

Operating Range	-55 to +125 deg C
Humidity	1,000 megohms within 5 minutes after removal from humidity, tested per MIL-STD-202, Method 106
Shock	Sawtooth pulse of 100 g 6ms per MIL-STD-202, Method 213, Condition I
Vibration	MIL-STD-202, Method 214, Test Condition I, Curve D
Thermal Shock	MIL-STD-202, Method 107, Test Condition A

Compliance Certifications (see product page for current document)

Plotted and Other Data

Notes:

Click the following link (or enter part number in “SEARCH” on website) to obtain additional part information including price, inventory and certifications: Mini SMP Male VITA 67 Connector Solder Attachment for PE-P047, PE-P047LL, PE-047SR, PE-SR047FL, PE-SR047AL PE45539

Pasternack Enterprises, Inc. • P.O. Box 16759, Irvine, CA 92623
Phone: (866) 727-8376 or (949) 261-1920 • **Fax:** (949) 261-7451
Sales@Pasternack.com • Techsupport@Pasternack.com

© 2020 Pasternack Enterprises All Rights Reserved

Mini SMP Male VITA 67 Connector Solder Attachment for PE-P047, PE-P047LL, PE-047SR, PE-SR047FL, PE-SR047AL

RF Connectors
Technical Data Sheet

PE45539

Mini SMP Male VITA 67 Connector Solder Attachment for PE-P047, PE-P047LL, PE-047SR, PE-SR047FL, PE-SR047AL from Pasternack Enterprises has same day shipment for domestic and International orders. Our RF, microwave and millimeter wave products maintain a 99.4% availability and are part of the broadest selection in the industry.

Click the following link (or enter part number in “SEARCH” on website) to obtain additional part information including price, inventory and certifications: Mini SMP Male VITA 67 Connector Solder Attachment for PE-P047, PE-P047LL, PE-047SR, PE-SR047FL, PE-SR047AL PE45539

URL: https://www.pasternack.com/mini-smp-male-pe-p047-pe-p047ll-pe-sr047fl-connector-pe45539-p.aspx

The information contained in this document is accurate to the best of our knowledge and representative of the part described herein. It may be necessary to make modifications to the part and/or the documentation of the part, in order to implement improvements. Pasternack reserves the right to make such changes as required. Unless otherwise stated, all specifications are nominal. Pasternack does not make any representation or warranty regarding the suitability of the part described herein for any particular purpose, and Pasternack does not assume any liability arising out of the use of any part or documentation.

Pasternack Enterprises, Inc. • P.O. Box 16759, Irvine, CA 92623
Phone: (866) 727-8376 or (949) 261-1920 • **Fax:** (949) 261-7451
Sales@Pasternack.com • Techsupport@Pasternack.com

© 2020 Pasternack Enterprises All Rights Reserved

PE45539 CAD Drawing

Mini SMP Male VITA 67 Connector Solder Attachment for PE-P047, PE-P047LL, PE-047SR, PE-SR047FL, PE-SR047AL

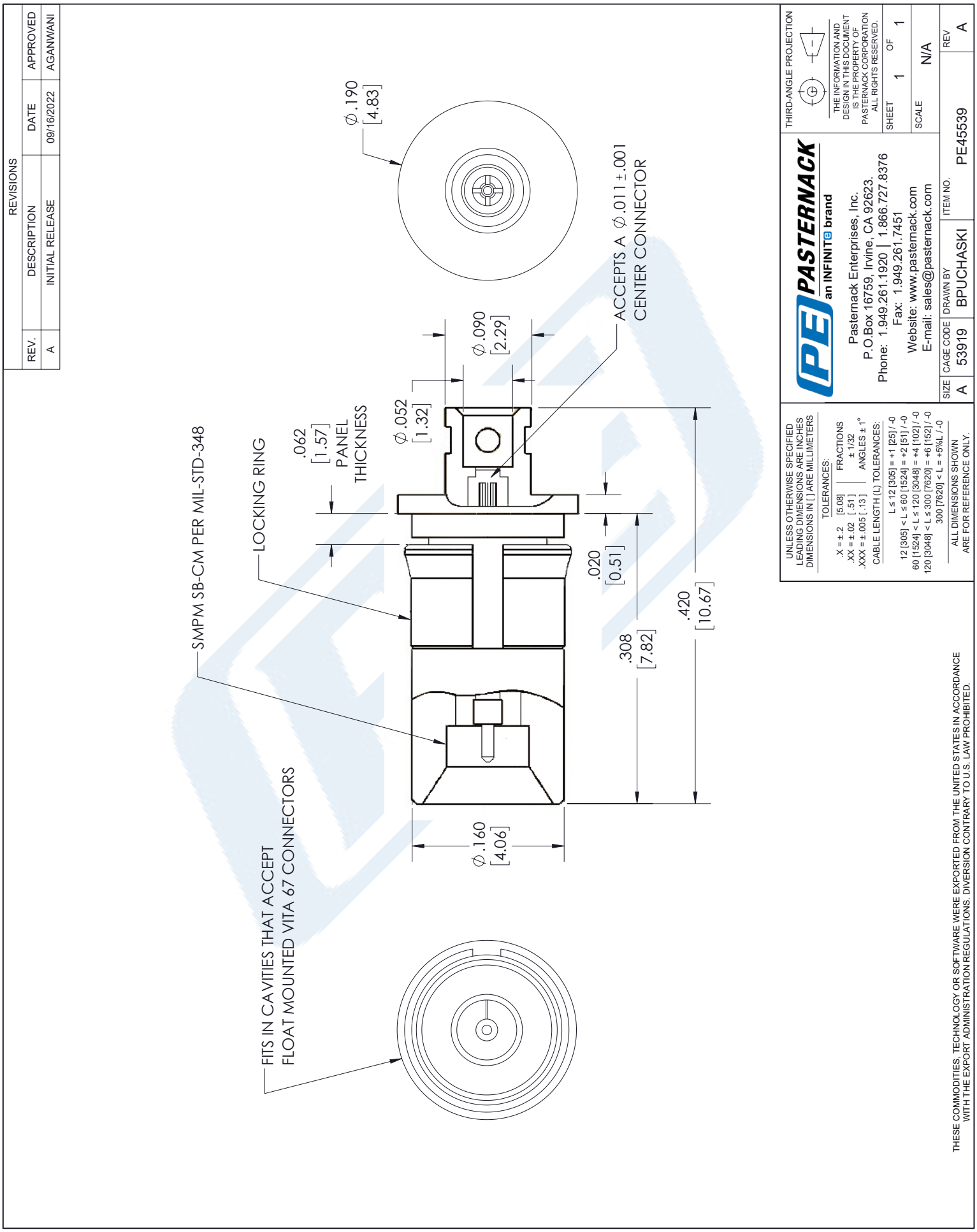

PASTERNACK®
THE ENGINEER'S RF SOURCE

2.92mm Male Connector Clamp/Solder Attachment for PE-SR047FL, PE-SR047AL, PE-047SR

RF Connectors Technical Data Sheet PE44797

Configuration

- 2.92mm Male Connector
- 50 Ohms
- Straight Body Geometry
- PE-SR047FL, PE-SR047AL, PE-047SR Interface Type
- Clamp/Solder Attachment
- 5/16 inch Hex

Features

- Max. Operating Frequency 40 GHz
- Good VSWR of 1.35:1
- Gold over Nickel Plated Beryllium Copper Contact
- 50 µin minimum contact plating

Applications

- General Purpose Test
- Custom Cable Assemblies

Description

Pasternack's PE44797 2.92mm male connector with clamp/solder attachment for PE-SR047FL, PE-SR047AL and PE-047SR is part of our full line of RF components available for same-day shipping. Our 2.92mm male connector operates up to a maximum frequency of 40 GHz and offers good VSWR of 1.35:1.

Our 2.92mm male connector PE44797 datasheet specifications and drawing with dimensions are shown below in this PDF. Pasternack's broad catalog of RF, microwave and millimeter wave connectors allows designers to configure and customize their signal connections however they like. Whether the need is to provide an I/O for a board design, or simply create a custom cable assembly configuration, Pasternack has the right connector for the job. Pasternack can also expertly build your custom cable assemblies for you and ship same-day.

Electrical Specifications

Description	Minimum	Typical	Maximum	Units
Frequency Range	DC		40	GHz
VSWR			1.35:1	

Mechanical Specifications

Size	
Length	0.46 in [11.68 mm]
Width/Dia.	0.35 in [8.89 mm]
Weight	0.01 lbs [4.54 g]
Mating Torque	8 to 10 in-lbs [0.90 to 1.13 Nm]

Click the following link (or enter part number in "SEARCH" on website) to obtain additional part information including price, inventory and certifications: 2.92mm Male Connector Clamp/Solder Attachment for PE-SR047FL, PE-SR047AL, PE-047SR PE44797

Pasternack Enterprises, Inc. • P.O. Box 16759, Irvine, CA 92623
Phone: (866) 727-8376 or (949) 261-1920 • **Fax:** (949) 261-7451
Sales@Pasternack.com • Techsupport@Pasternack.com

© 2016 Pasternack Enterprises All Rights Reserved

2.92mm Male Connector Clamp/Solder Attachment for PE-SR047FL, PE-SR047AL, PE-047SR

Material Specifications

Description	Material	Plating
Contact	Beryllium Copper	Gold over Nickel 50 µin minimum
Insulation	PEI	
Body	Passivated Stainless Steel	SAE-AMS-2700
Coupling Nut	Passivated Stainless Steel	SAE-AMS-2700

Compliance Certifications (see product page for current document)

Plotted and Other Data

Notes:

2.92mm Male Connector Clamp/Solder Attachment for PE-SR047FL, PE-SR047AL, PE-047SR from Pasternack Enterprises has same day shipment for domestic and International orders. Our RF, microwave and millimeter wave products maintain a 99% availability and are part of the broadest selection in the industry.

Click the following link (or enter part number in "SEARCH" on website) to obtain additional part information including price, inventory and certifications: 2.92mm Male Connector Clamp/Solder Attachment for PE-SR047FL, PE-SR047AL, PE-047SR PE44797

URL: https://www.pasternack.com/2.92mm-male-standard-pe-sr047fl-pe-sr047al-pe-047sr-connector-pe44797-p.aspx

The information contained in this document is accurate to the best of our knowledge and representative of the part described herein. It may be necessary to make modifications to the part and/or the documentation of the part, in order to implement improvements. Pasternack reserves the right to make such changes as required. Unless otherwise stated, all specifications are nominal. Pasternack does not make any representation or warranty regarding the suitability of the part described herein for any particular purpose, and Pasternack does not assume any liability arising out of the use of any part or documentation.

Pasternack Enterprises, Inc. • P.O. Box 16759, Irvine, CA 92623
Phone: (866) 727-8376 or (949) 261-1920 • **Fax:** (949) 261-7451
Sales@Pasternack.com • Techsupport@Pasternack.com

© 2016 Pasternack Enterprises All Rights Reserved

PE44797 CAD Drawing

2.92mm Male Connector Clamp/Solder Attachment for PE-SR047FL, PE-SR047AL, PE-047SR

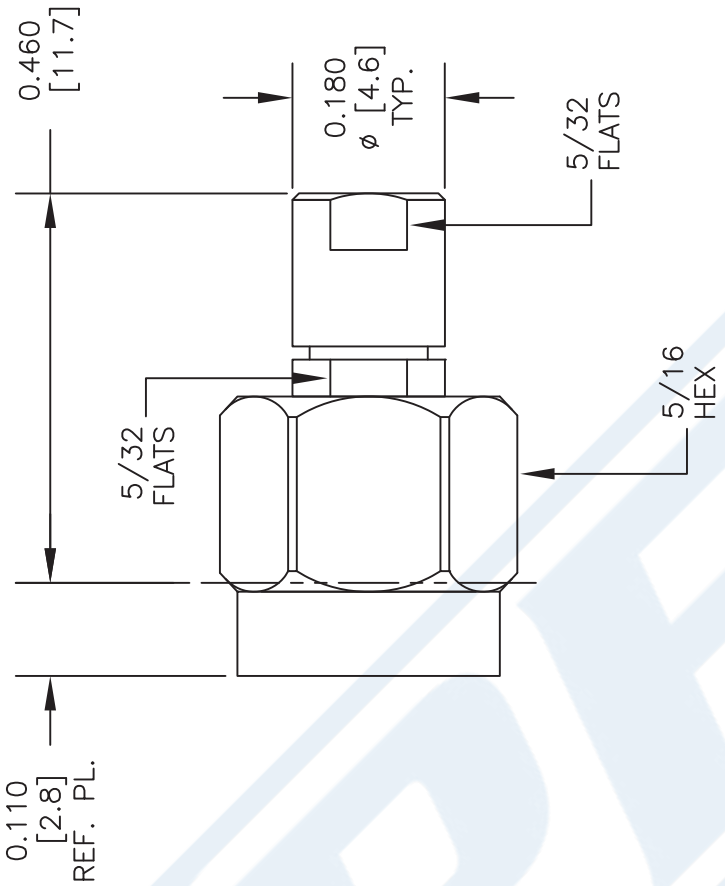

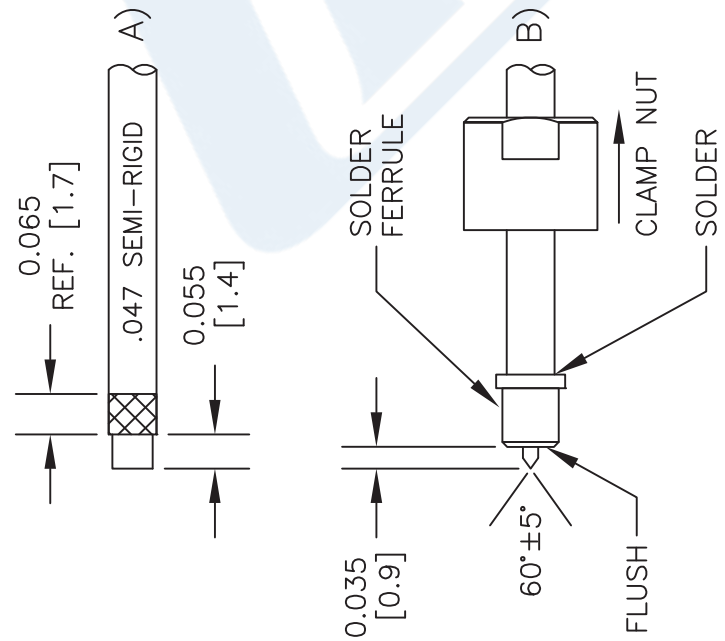

STRIPPING DIMENSIONS

ASSEMBLY PROCEDURES

1. STRIP CABLE AS SHOWN IN (A). DO NOT NICK DIELECTRIC.
2. PRE-TIN CABLE JACKET TO APPROXIMATE DIMENSION AS SHOWN IN (A).
3. INSERT CABLE THRU ADAPTER UNTIL IT BOTTOMS OUT. SOLDER OUTER CONDUCTOR TO ADAPTER & TRIM DIELECTRIC AS SHOWN IN (B).
4. SCREW ASSEMBLY INTO BODY & TIGHTEN NUT.

NOTES:
1. UNLESS OTHERWISE SPECIFIED ALL DIMENSIONS ARE NOMINAL.
2. ALL SPECIFICATIONS ARE SUBJECT TO CHANGE WITHOUT NOTICE AT ANY TIME.
3. DIMENSIONS ARE IN INCHES [mm].
4. FITS MIL-C-17 AND EQUIVALENT CABLES.

DWG TITLE PE44797

CAD FILE 042313 | SCALE N/A | SIZE A | 2233

FSCM NO. 53919

PASTERNACK®
Pasternack Enterprises, Inc.
P.O. Box 16759 | Irvine | CA | 92623
Phone: (949) 261-1920 | **Fax:** (949) 261-7451
Website: www.pasternack.com | **E-Mail:** sales@pasternack.com

© 2016 Pasternack Enterprises All Rights Reserved

047 Semi-rigid Coax Cable with Copper Outer Conductor

TECHNICAL DATA SHEET PE-047SR

Configuration

Inner Conductor Material and Plating	Copper Clad Steel, Silver
Dielectric Type	PTFE
Shield Materials	Copper

Electrical Specifications

Impedance, Ohms	50
Maximum Operating Frequency, GHz	40
Dielectric Withstanding Voltage, Vrms	2,000

Electrical Specifications by Frequency

Frequency 1

Frequency, MHz	1000
Attenuation, dB/100ft [dB/100m]	40 [131.23]
Power Handling, Watts	32

Frequency 2

Frequency, GHz	10
Attenuation, dB/100ft [dB/100m]	130 [426.51]
Power Handling, Watts	9

Frequency 3

Frequency, GHz	20
Attenuation, dB/100ft [dB/100m]	190 [623.36]
Power Handling, Watts	6.5

Mechanical Specifications

Temperature

Operating Range, deg C	-55 to +100

Inner Conductor

Number of Strands	1
Material	Copper Clad Steel
Plating	Silver
Diameter, in [mm]	0.011 [0.28]

Dielectric:

Type	PTFE
Diameter, in [mm]	0.037 [0.94]

Shield:

Number of	1
Material 1	Copper
Diameter, in [mm]	0.047 [1.19]

Click the following link (or enter part number in “SEARCH” on website) to obtain additional part information including price, inventory and certifications: 047 Semi-rigid Coax Cable with Copper Outer Conductor PE-047SR

Pasternack Enterprises, Inc. • P.O. Box 16759, Irvine, CA 92623
Phone: (866) 727-8376 or (949) 261-1920 • **Fax:** (949) 261-7451
Sales@Pasternack.com • Techsupport@Pasternack.com

© 2014 Pasternack Enterprises All Rights Reserved

047 Semi-rigid Coax Cable with Copper Outer Conductor

Jacket:

Diameter, in [mm]	0.047 [1.19]
One Time Minimum Bend Radius, in [mm]	0.05 [1.27]
Weight, lbs/ft [Kg/m]	0.005 [0.01]

Compliance Certifications (visit www.Pasternack.com for current document)

RoHS Compliant	
REACH Compliant	12/19/2011

Plotted and Other Data

Notes:

- Values at +25 °C, sea level

047 Semi-rigid Coax Cable with Copper Outer Conductor from Pasternack Enterprises has same day shipment for domestic and International orders. Our RF, microwave and millimeter wave products maintain a 99% availability and are part of the broadest selection in the industry.

Click the following link (or enter part number in "SEARCH" on website) to obtain additional part information including price, inventory and certifications: 047 Semi-rigid Coax Cable with Copper Outer Conductor PE-047SR

URL: http://www.pasternack.com/semirigid-0.047-50-ohm-coax-cable-copper-pe-047sr-p.aspx

The information contained in this document is accurate to the best of our knowledge and representative of the part described herein. It may be necessary to make modifications to the part and/or the documentation of the part, in order to implement improvements. Pasternack reserves the right to make such changes as required. Unless otherwise stated, all specifications are nominal. Pasternack does not make any representation or warranty regarding the suitability of the part described herein for any particular purpose, and Pasternack does not assume any liability arising out of the use of any part or documentation.

Pasternack Enterprises, Inc. • P.O. Box 16759, Irvine, CA 92623
Phone: (866) 727-8376 or (949) 261-1920 • **Fax:** (949) 261-7451
Sales@Pasternack.com • Techsupport@Pasternack.com

© 2014 Pasternack Enterprises All Rights Reserved

PE-047SR CAD Drawing

047 Semi-rigid Coax Cable with Copper Outer Conductor

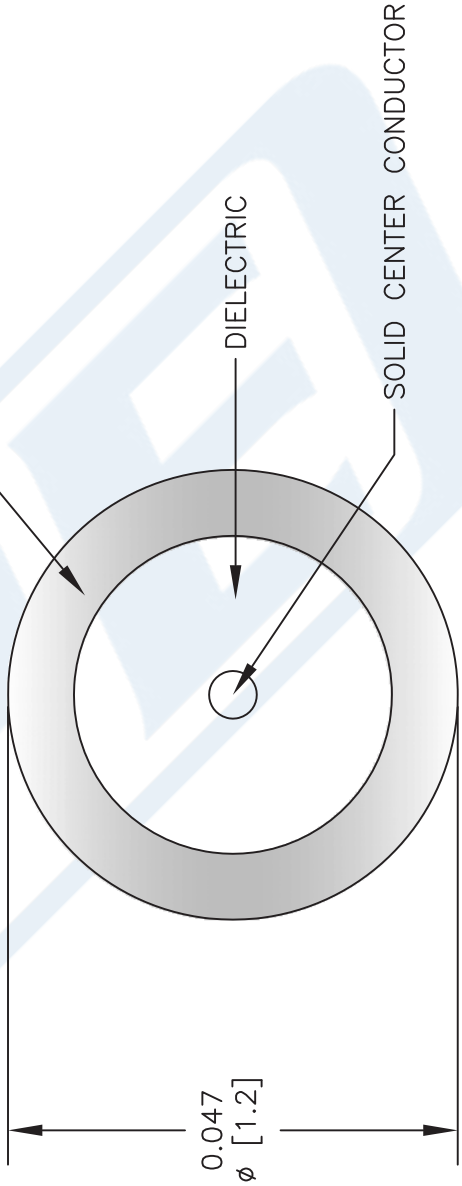

NOTES:
1. UNLESS OTHERWISE SPECIFIED ALL DIMENSIONS ARE NOMINAL.
2. ALL SPECIFICATIONS ARE SUBJECT TO CHANGE WITHOUT NOTICE AT ANY TIME.
3. DIMENSIONS ARE IN INCHES [mm].

DWG TITLE
PE-047SR

FSCM NO. 53919

CAD FILE 073113 | SCALE N/A | SIZE A | 2233

PASTERNACK®
Pasternack Enterprises, Inc.
P.O. Box 16759 | Irvine | CA | 92623
Phone: (949) 261-1920 | **Fax:** (949) 261-7451
Website: www.pasternack.com | **E-Mail:** sales@pasternack.com

© 2014 Pasternack Enterprises All Rights Reserved