PASTERNACK®
THE ENGINEER'S RF SOURCE

SC Male Right Angle Connector Clamp/Solder Attachment For RG58, RG55, RG141, RG142, RG223, RG400

RF Connectors
Technical Data Sheet

PE4978

Configuration

- Standard SC Male Standard Connector
- MIL-C-39012
- 50 Ohms
- Right Angle Body Geometry
- RG58, RG55, RG141, RG142, RG223, RG400 Interface Type
- Clamp/Solder Attachment

Features

- Max. Operating Frequency 11 GHz
- Silver Plated Contact
- Contact plating according to QQ-S-365

Applications

- General Purpose Test
- Custom Cable Assemblies

Description

Pasternack's PE4978 SC male right angle connector with clamp/solder attachment for RG58, RG55, RG141, RG142, RG223 and RG400 is part of our full line of RF components available for same-day shipping. Our SC male connector operates up to a maximum frequency of 11 GHz. Its right angle body geometry allows for easier connections in tight spaces.

Our SC male right angle connector PE4978 datasheet specifications and drawing with dimensions are shown below in this PDF. Pasternack's broad catalog of RF, microwave and millimeter wave connectors allows designers to configure and customize their signal connections however they like. Whether the need is to provide an I/O for a board design, or simply create a custom cable assembly configuration, Pasternack has the right connector for the job. Pasternack can also expertly build your custom cable assemblies for you and ship same-day.

Electrical Specifications

Description	Minimum	Typical	Maximum	Units
Frequency Range	DC		11	GHz
Operating Voltage (AC)			1,000	Vrms
Dielectric Withstanding Voltage (AC)			3,000	Vrms
Insulation Resistance	5,000			MOhms

Mechanical Specifications

Size	
Length	1.75 in [44.45 mm]
Width/Dia.	0.8 in [20.32 mm]
Height	1.5 in [38.1 mm]
Weight	0.148 lbs [67.13 g]

Click the following link (or enter part number in "SEARCH" on website) to obtain additional part information including price, inventory and certifications: SC Male Right Angle Connector Clamp/Solder Attachment For RG58, RG55, RG141, RG142, RG223, RG400 PE4978

Pasternack Enterprises, Inc. • P.O. Box 16759, Irvine, CA 92623
Phone: (866) 727-8376 or (949) 261-1920 • **Fax:** (949) 261-7451
Sales@Pasternack.com • Techsupport@Pasternack.com

© 2018 Pasternack Enterprises All Rights Reserved

SC Male Right Angle Connector Clamp/Solder Attachment For RG58, RG55, RG141, RG142, RG223, RG400

Material Specifications

Description	Material	Plating
Contact		Silver QQ-S-365
Insulation	Teflon	
Body	Brass	Nickel
Coupling Nut	Brass	Nickel

Environmental Specifications

Temperature

Operating Range -65 to +125 deg C

Compliance Certifications (see product page for current document)

Plotted and Other Data

Notes:

SC Male Right Angle Connector Clamp/Solder Attachment For RG58, RG55, RG141, RG142, RG223, RG400 from Pasternack Enterprises has same day shipment for domestic and International orders. Our RF, microwave and millimeter wave products maintain a 99.4% availability and are part of the broadest selection in the industry.

Click the following link (or enter part number in "SEARCH" on website) to obtain additional part information including price, inventory and certifications: SC Male Right Angle Connector Clamp/Solder Attachment For RG58, RG55, RG141, RG142, RG223, RG400 PE4978

URL: https://www.pasternack.com/sc-male-standard-rg58-rg55-rg141-rg142-rg223-rg400-connector-pe4978-p.aspx

The information contained in this document is accurate to the best of our knowledge and representative of the part described herein. It may be necessary to make modifications to the part and/or the documentation of the part, in order to implement improvements. Pasternack reserves the right to make such changes as required. Unless otherwise stated, all specifications are nominal. Pasternack does not make any representation or warranty regarding the suitability of the part described herein for any particular purpose, and Pasternack does not assume any liability arising out of the use of any part or documentation.

Pasternack Enterprises, Inc. • P.O. Box 16759, Irvine, CA 92623
Phone: (866) 727-8376 or (949) 261-1920 • **Fax:** (949) 261-7451
Sales@Pasternack.com • Techsupport@Pasternack.com

© 2018 Pasternack Enterprises All Rights Reserved

PE4978 CAD Drawing

SC Male Right Angle Connector Clamp/Solder Attachment For
RG58, RG55, RG141, RG142, RG223, RG400

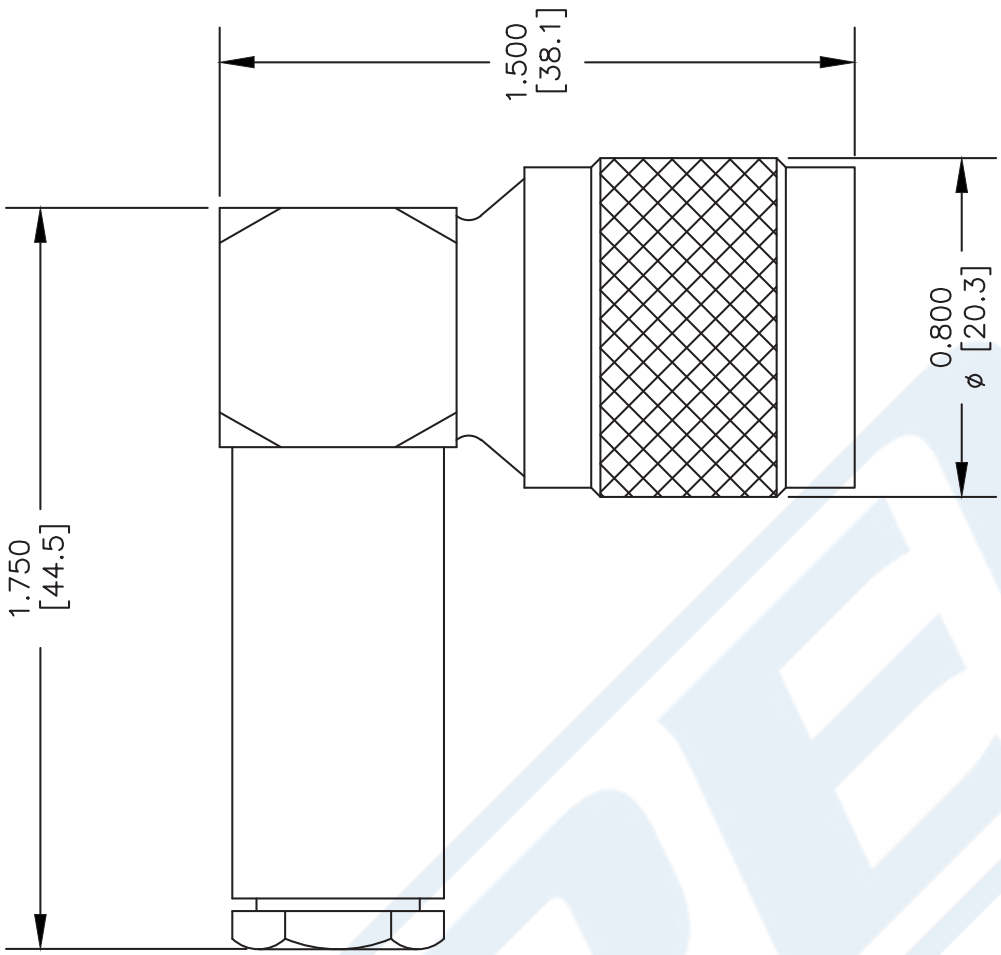

ASSEMBLY PROCEDURES

SLIDE CLAMP NUT (1), WASHER (2) & GASKET (3) OVER CABLE. STRIP CABLE AS SHOWN. DO NOT NICK BRAID WHILE CUTTING JACKET. TAPER END OF BRAID TO PERMIT ASSEMBLY OF BRAID CLAMP (4). SLIDE BRAID CLAMP (4) OVER BRAID & SEAT AGAINST CABLE.

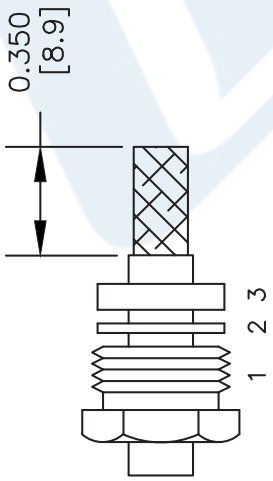

FORM BRAID OVER CLAMP NUT (4). TRIM BRAID BACK TO SHOULDER. CUT DIELECTRIC & CENTER CONDUCTOR TO DIMENSION SHOWN. DO NOT NICK CENTER CONDUCTOR. SOLDER CONTACT TO CENTER CONDUCTOR. REMOVE EXCESS SOLDER. DO NOT OVER HEAT DIELECTRIC. INSERT CABLE ASSEMBLY INTO BODY & TIGHTEN.

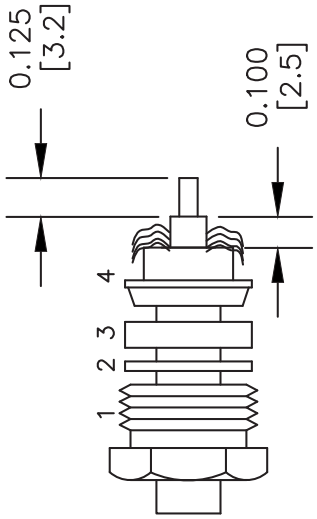

NOTES:
1. UNLESS OTHERWISE SPECIFIED ALL DIMENSIONS ARE NOMINAL.
2. ALL SPECIFICATIONS ARE SUBJECT TO CHANGE WITHOUT NOTICE AT ANY TIME.
3. DIMENSIONS ARE IN INCHES [mm].
4. FITS MIL-C-17 AND EQUIVALENT CABLES.

DWG TITLE
PE4978

FSCM NO. 53919

CAD FILE 062402 | SCALE N/A | SIZE A | XXXX

PASTERNACK®
Pasternack Enterprises, Inc.
P.O. Box 16759 | Irvine | CA | 92623
Phone: (949) 261-1920 | **Fax:** (949) 261-7451
Website: www.pasternack.com | **E-Mail:** sales@pasternack.com

© 2018 Pasternack Enterprises All Rights Reserved

PASTERNACK®
THE ENGINEER'S RF SOURCE

BMA Plug Bulkhead Mount Slide-On Connector Crimp/ Solder Attachment for RG142, RG223, RG400, RG55

Configuration

- Slide-On BMA Plug Connector
- 50 Ohms
- Straight Body Geometry
- RG142, RG223, RG400, RG55 Interface Type
- Crimp/Solder Attachment
- Bulkhead
- 8 mm Hex

Features

- Max. Operating Frequency 12.4 GHz
- Good VSWR of 1.28:1
- Gold Plated Bronze Contact
- 51.18µ in. minimum contact plating
- Blind Mate Connector
- Low-Engagement Force

Applications

- General Purpose Test
- Rack and Panel Mount Applications
- Custom Cable Assemblies
- Blind Mating
- Rack and Panel
- Phased Array Systems
- Base Stations
- RF Backplanes
- Test I/O

Description

Pasternack's PE45318 BMA plug slide-on bulkhead connector with crimp/solder attachment for RG142, RG223, RG400 and RG55 is part of our full line of RF components available for same-day shipping. Our BMA plug connector operates up to a maximum frequency of 12.4 GHz and offers good VSWR of 1.28:1. The Pasternack blind mate connector is ideal for applications where direct visual or tactile access to the connection point is not possible, for example, when two circuit boards need to be mated. This BMA bulkhead connector allows designers to create external connections on their product enclosures, and can be used in a variety of other rack mount and panel mount applications.

Our BMA plug bulkhead connector PE45318 datasheet specifications and drawing with dimensions are shown below in this PDF. Pasternack's broad catalog of RF, microwave and millimeter wave connectors allows designers to configure and customize their signal connections however they like. Whether the need is to provide an I/O for a board design, or simply create a custom cable assembly configuration, Pasternack has the right connector for the job. Pasternack can also expertly build your custom cable assemblies for you and ship same-day.

Electrical Specifications

Description	Minimum	Typical	Maximum	Units
Frequency Range	DC		12.4	GHz
VSWR			1.28:1	
Insertion Loss			0.1	dB
Operating Voltage (AC)			350	Vrms
Dielectric Withstanding Voltage (AC)			1,000	Vrms
Insulation Resistance	5,000			MOhms

Click the following link (or enter part number in "SEARCH" on website) to obtain additional part information including price, inventory and certifications: BMA Plug Bulkhead Mount Slide-On Connector Crimp/Solder Attachment for RG142, RG223, RG400, RG55 PE45318

Pasternack Enterprises, Inc. • P.O. Box 16759, Irvine, CA 92623
Phone: (866) 727-8376 or (949) 261-1920 • **Fax:** (949) 261-7451
Sales@Pasternack.com • Techsupport@Pasternack.com

© 2017 Pasternack Enterprises All Rights Reserved

BMA Plug Bulkhead Mount Slide-On Connector Crimp/ Solder Attachment for RG142, RG223, RG400, RG55

Mechanical Specifications

Size

Length	0.95 in [24.13 mm]
Width/Dia.	0.315 in [8.00 mm]
Weight	0.011 lbs [4.99 g]
Mating Cycles	500 Cycles

Material Specifications

Description	Material	Plating
Contact	Bronze	Gold 51.18µ in. minimum
Insulation	PTFE	
Outer Conductor	Brass	Tri-Metal
Body	Brass	Tri-Metal
Washer	Brass	Tri-Metal

Environmental Specifications

Temperature

Operating Range	-65 to +125 deg C

Click the following link (or enter part number in "SEARCH" on website) to obtain additional part information including price, inventory and certifications: BMA Plug Bulkhead Mount Slide-On Connector Crimp/Solder Attachment for RG142, RG223, RG400, RG55 PE45318

Pasternack Enterprises, Inc. • P.O. Box 16759, Irvine, CA 92623
Phone: (866) 727-8376 or (949) 261-1920 • **Fax:** (949) 261-7451
Sales@Pasternack.com • Techsupport@Pasternack.com

© 2017 Pasternack Enterprises All Rights Reserved

BMA Plug Bulkhead Mount Slide-On Connector Crimp/ Solder Attachment for RG142, RG223, RG400, RG55

Compliance Certifications (see product page for current document)

Plotted and Other Data

Notes:

BMA Plug Bulkhead Mount Slide-On Connector Crimp/Solder Attachment for RG142, RG223, RG400, RG55 from Pasternack Enterprises has same day shipment for domestic and International orders. Our RF, microwave and millimeter wave products maintain a 99.4% availability and are part of the broadest selection in the industry.

Click the following link (or enter part number in "SEARCH" on website) to obtain additional part information including price, inventory and certifications: BMA Plug Bulkhead Mount Slide-On Connector Crimp/Solder Attachment for RG142, RG223, RG400, RG55 PE45318

URL: https://www.pasternack.com/bma-plug-slide-on-rg142-rg223-rg400-rg55-connector-pe45318-p.aspx

The information contained in this document is accurate to the best of our knowledge and representative of the part described herein. It may be necessary to make modifications to the part and/or the documentation of the part, in order to implement improvements. Pasternack reserves the right to make such changes as required. Unless otherwise stated, all specifications are nominal. Pasternack does not make any representation or warranty regarding the suitability of the part described herein for any particular purpose, and Pasternack does not assume any liability arising out of the use of any part or documentation.

Pasternack Enterprises, Inc. • P.O. Box 16759, Irvine, CA 92623
Phone: (866) 727-8376 or (949) 261-1920 • **Fax:** (949) 261-7451
Sales@Pasternack.com • Techsupport@Pasternack.com

© 2017 Pasternack Enterprises All Rights Reserved

PE45318 CAD Drawing

BMA Plug Bulkhead Mount Slide-On Connector Crimp/Solder Attachment for RG142, RG223, RG400, RG55

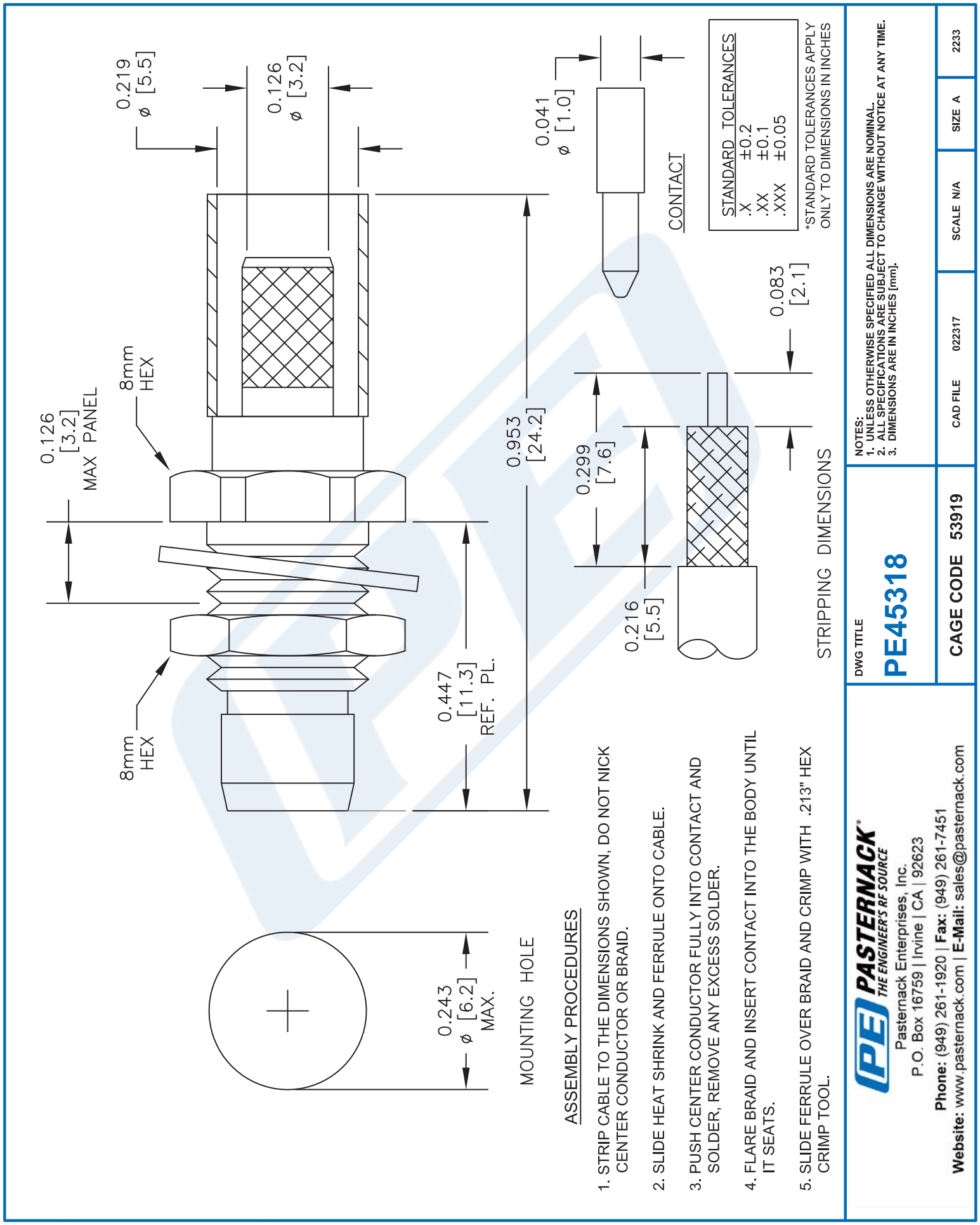

© 2017 Pasternack Enterprises All Rights Reserved

PASTERNACK®
www.pasternack.com

Flexible RG142 Coax Cable Double Shielded with Tan FEP Jacket

TECHNICAL DATA SHEET RG142B/U

Flexible RG142 Coax Cable Double Shielded with Tan FEP Jacket

Configuration

Inner Conductor Material and Plating	Copper Clad Steel, Silver
Dielectric Type	PTFE
Shield Materials	Silver Plated Copper Braid, Silver Plated Copper Braid
Jacket Material and Color	FEP, Tan

Electrical Specifications

Impedance, Ohms	50
Velocity of Propagation, %	69.2
Maximum Operating Frequency, GHz	8
RF Shielding, dB	90
Capacitance, pF/ft [pF/m]	29.4 [96.46]
Maximum Operating Voltage, Volts	1,900

Electrical Specifications by Frequency

Frequency 1

Frequency, MHz	100
Attenuation, dB/100ft [dB/100m]	3.9 [12.8]

Frequency 2

Frequency, MHz	1000
Attenuation, dB/100ft [dB/100m]	13 [42.65]

Frequency 3

Frequency, GHz	3
Attenuation, dB/100ft [dB/100m]	23.8 [78.08]

Frequency 4

Frequency, GHz	5
Attenuation, dB/100ft [dB/100m]	36 [118.11]

Mechanical Specifications

Temperature

Operating Range, deg C	-55 to +200

Inner Conductor

Number of Strands	1
Material	Copper Clad Steel
Plating	Silver
Diameter, in [mm]	0.037 [0.94]

Click the following link (or enter part number in “SEARCH” on website) to obtain additional part information including price, inventory and certifications: Flexible RG142 Coax Cable Double Shielded with Tan FEP Jacket RG142B/U

The information contained in this document is accurate to the best of our knowledge and representative of the part described herein. It may be necessary to make modifications to the part and/or the documentation of the part, in order to implement improvements. Pasternack reserves the right to make such changes as required. Unless otherwise stated, all specifications are nominal.

Pasternack Enterprises, Inc. • P.O. Box 16759, Irvine, CA 92623
Phone: (866) 727-8376 or (949) 261-1920 • **Fax:** (949) 261-7451
Sales@Pasternack.com • Techsupport@Pasternack.com

© 2013 Pasternack Enterprises All Rights Reserved

Flexible RG142 Coax Cable Double Shielded with Tan FEP Jacket

TECHNICAL DATA SHEET RG142B/U

Dielectric:

Type	PTFE
Diameter, in [mm]	0.116 [2.95]

Shield:

Number of	2
Material 1	Silver Plated Copper Braid
Material 2	Silver Plated Copper Braid
Diameter, in [mm]	0.156 [3.96]

Jacket:

Material	FEP
Diameter, in [mm]	0.195 [4.95]
Color	Tan
One Time Minimum Bend Radius, in [mm]	0.984 [24.99]
Repeated Minimum Bend Radius, in [mm]	2 [50.8]
Weight, lbs/ft [Kg/m]	0.046 [0.07]

Compliance Certifications (visit www.Pasternack.com for current document)

RoHS Compliant	Yes

Plotted and Other Data

Notes:	Values at 25 °C, sea level

URL: http://www.pasternack.com/flexible-0.195-rg142-50-ohm-coax-cable-fep-jacket-rg142b-u-p.aspx

Flexible RG142 Coax Cable Double Shielded with Tan FEP Jacket from Pasternack Enterprises has same day shipment for domestic and International orders. Our RF, microwave and fiber optic products maintain a 99% availability and are part of the broadest selection in the industry.

The information contained in this document is accurate to the best of our knowledge and representative of the part described herein. It may be necessary to make modifications to the part and/or the documentation of the part, in order to implement improvements. Pasternack reserves the right to make such changes as required. Unless otherwise stated, all specifications are nominal.

Pasternack Enterprises, Inc. • P.O. Box 16759, Irvine, CA 92623
Phone: (866) 727-8376 or (949) 261-1920 • **Fax:** (949) 261-7451
Sales@Pasternack.com • Techsupport@Pasternack.com

© 2013 Pasternack Enterprises All Rights Reserved

RG142B/U CAD Drawing

Flexible RG142 Coax Cable Double Shielded with Tan FEP Jacket

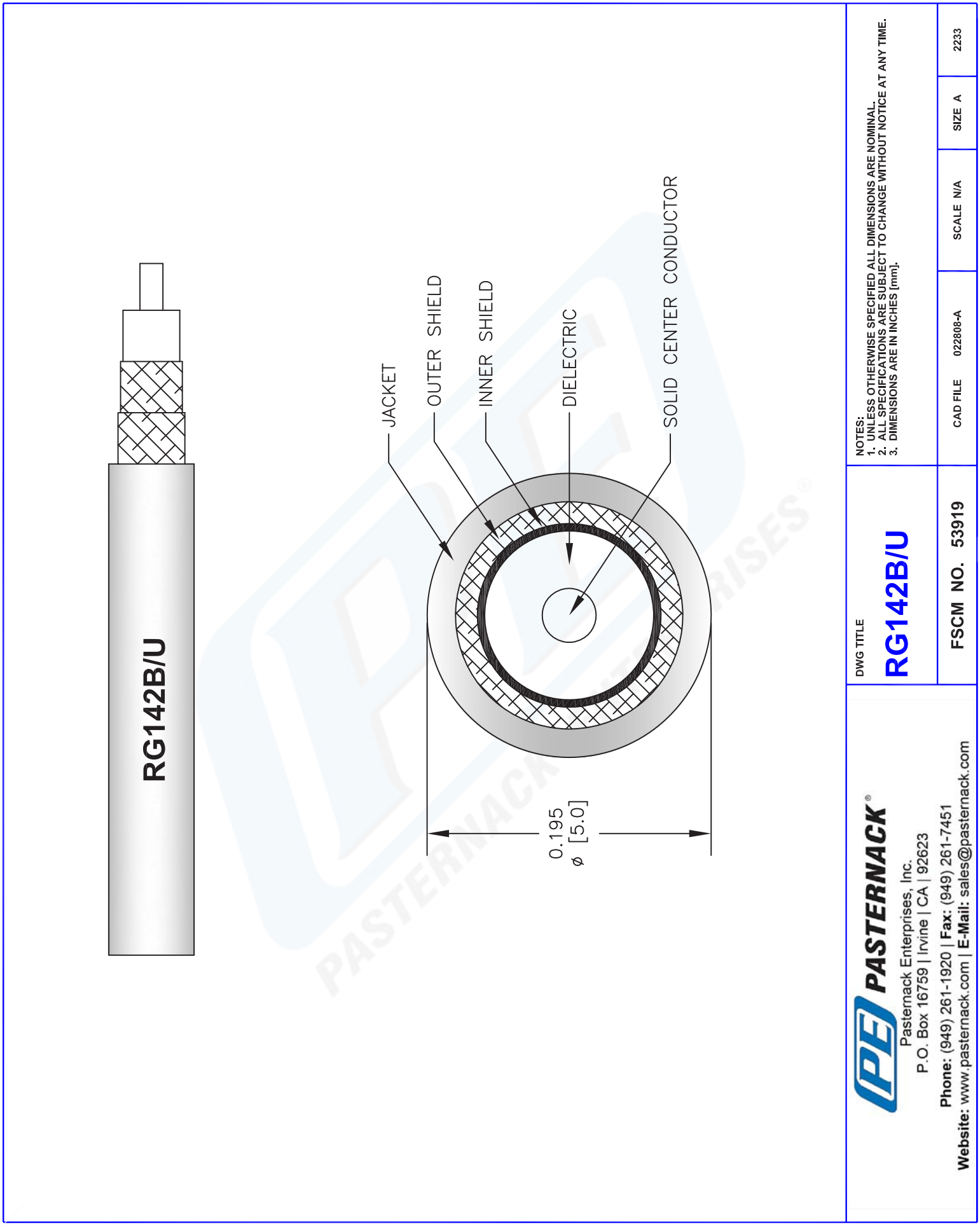

© 2012 Pasternack Enterprises All Rights Reserved