C Male Connector Crimp/Solder Attachment for RG58, RG303, RG141, PE-C195, PE-P195, LMR-195, 0.195 inch

Configuration

- C Male Connector
- MIL-STD-348A
- 50 Ohms
- Straight Body Geometry
- RG58, RG303, RG141, PE-C195, PE-P195, LMR-195, 0.195 inch Interface Type
- Crimp/Solder Attachment

Features

- Max. Operating Frequency 3 GHz
- Good VSWR of 1.3:1
- Silver Plated Brass Contact
- 200 µin minimum contact plating

Applications

- General Purpose Test
- Custom Cable Assemblies

Description

Pasternack's PE4517 type C male connector with crimp/solder attachment for RG58, RG303, RG141, PE-C195, PE-P195, LMR-195 and 0.195 inch is part of our full line of RF components available for same-day shipping. Our type C male connector operates up to a maximum frequency of 3 GHz and offers good VSWR of 1.3:1.

Our type C male connector PE4517 datasheet specifications and drawing with dimensions are shown below in this PDF. Pasternack's broad catalog of RF, microwave and millimeter wave connectors allows designers to configure and customize their signal connections however they like. Whether the need is to provide an I/O for a board design, or simply create a custom cable assembly configuration, Pasternack has the right connector for the job. Pasternack can also expertly build your custom cable assemblies for you and ship same-day.

Electrical Specifications

Description	Minimum	Typical	Maximum	Units
Frequency Range	DC		3	GHz
VSWR			1.3:1	
Operating Voltage (AC)			1,000	Vrms

Mechanical Specifications

Size

Length	1.4 in [35.56 mm]
Width/Dia.	0.75 in [19.05 mm]
Weight	0.062 lbs [28.12 g]

Click the following link (or enter part number in "SEARCH" on website) to obtain additional part information including price, inventory and certifications: C Male Connector Crimp/Solder Attachment for RG58, RG303, RG141, PE-C195, PE-P195, LMR-195, 0.195 inch PE4517

Pasternack Enterprises, Inc. • P.O. Box 16759, Irvine, CA 92623
Phone: (866) 727-8376 or (949) 261-1920 • **Fax:** (949) 261-7451
Sales@Pasternack.com • Techsupport@Pasternack.com

© 2016 Pasternack Enterprises All Rights Reserved

C Male Connector Crimp/Solder Attachment for RG58, RG303, RG141, PE-C195, PE-P195, LMR-195, 0.195 inch

Material Specifications

Description	Material	Plating
Contact	Brass	Silver 200 µin minimum
Insulation	PTFE	
Body	Brass	Nickel 100 µin minimum
Coupling Nut	Brass	Nickel 100 µin minimum

Environmental Specifications

Temperature

Operating Range -65 to +165 deg C

Compliance Certifications (see product page for current document)

Plotted and Other Data

Notes:

C Male Connector Crimp/Solder Attachment for RG58, RG303, RG141, PE-C195, PE-P195, LMR-195, 0.195 inch from Pasternack Enterprises has same day shipment for domestic and International orders. Our RF, microwave and millimeter wave products maintain a 99% availability and are part of the broadest selection in the industry.

Click the following link (or enter part number in "SEARCH" on website) to obtain additional part information including price, inventory and certifications: C Male Connector Crimp/Solder Attachment for RG58, RG303, RG141, PE-C195, PE-P195, LMR-195, 0.195 inch PE4517

URL: https://www.pasternack.com/c-male-standard-rg58-connector-pe4517-p.aspx

The information contained in this document is accurate to the best of our knowledge and representative of the part described herein. It may be necessary to make modifications to the part and/or the documentation of the part, in order to implement improvements. Pasternack reserves the right to make such changes as required. Unless otherwise stated, all specifications are nominal. Pasternack does not make any representation or warranty regarding the suitability of the part described herein for any particular purpose, and Pasternack does not assume any liability arising out of the use of any part or documentation.

Pasternack Enterprises, Inc. • P.O. Box 16759, Irvine, CA 92623
Phone: (866) 727-8376 or (949) 261-1920 • **Fax:** (949) 261-7451
Sales@Pasternack.com • Techsupport@Pasternack.com

© 2016 Pasternack Enterprises All Rights Reserved

PE4517 CAD Drawing

C Male Connector Crimp/Solder Attachment for RG58, RG303, RG141, PE-C195, PE-P195, LMR-195, 0.195 inch

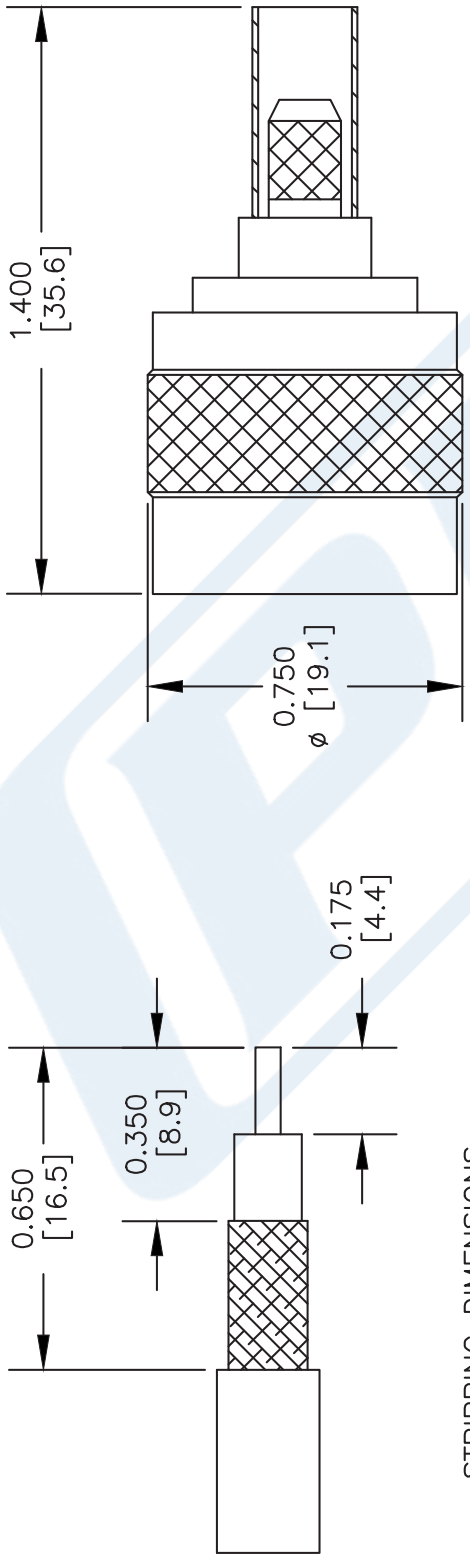

STRIPPING DIMENSIONS

CRIMP SIZE REQUIRED

CONTACT: .100" HEX CRIMP TOOL
FERRULE: .213" HEX CRIMP TOOL

NOTES:
1. UNLESS OTHERWISE SPECIFIED ALL DIMENSIONS ARE NOMINAL.
2. ALL SPECIFICATIONS ARE SUBJECT TO CHANGE WITHOUT NOTICE AT ANY TIME.
3. DIMENSIONS ARE IN INCHES [mm].
4. FITS MIL-C-17 AND EQUIVALENT CABLES.

DWG TITLE
PE4517

FSCM NO. 53919

CAD FILE 052102 | SCALE N/A | SIZE A | 127

PASTERNACK®
Pasternack Enterprises, Inc.
P.O. Box 16759 | Irvine | CA | 92623
Phone: (949) 261-1920 | **Fax:** (949) 261-7451
Website: www.pasternack.com | **E-Mail:** sales@pasternack.com

© 2016 Pasternack Enterprises All Rights Reserved

PASTERNACK®
THE ENGINEER'S RF SOURCE

SHV Plug Connector Crimp/Solder Attachment for RG58, RG303, RG141, PE-C195, PE-P195, LMR-195, 0.195 inch

Configuration

- SHV Plug Connector
- MIL-STD-348A
- 50 Ohms
- Straight Body Geometry
- RG58, RG303, RG141, PE-C195, PE-P195, LMR-195, 0.195 inch Interface Type
- Crimp/Solder Attachment

Features

- Max. Operating Frequency 300 MHz
- Good VSWR of 1.3:1
- Gold Plated Brass Contact
- 30 µin minimum contact plating

Applications

- General Purpose Test
- Custom Cable Assemblies

Description

Pasternack's PE4194 SHV plug connector with crimp/solder attachment for RG58, RG303, RG141, PE-C195, PE-P195, LMR-195 and 0.195 inch is part of our full line of RF components available for same-day shipping. Our SHV plug connector operates up to a maximum frequency of 300 MHz and offers good VSWR of 1.3:1.

Our SHV plug connector PE4194 datasheet specifications and drawing with dimensions are shown below in this PDF. Pasternack's broad catalog of RF, microwave and millimeter wave connectors allows designers to configure and customize their signal connections however they like. Whether the need is to provide an I/O for a board design, or simply create a custom cable assembly configuration, Pasternack has the right connector for the job. Pasternack can also expertly build your custom cable assemblies for you and ship same-day.

Electrical Specifications

Description	Minimum	Typical	Maximum	Units
Frequency Range	DC		300	MHz
VSWR			1.3:1	
Operating Voltage (AC)			1,400	Vrms

Mechanical Specifications

Size

Length	1.778 in [45.16 mm]
Width/Dia.	0.571 in [14.50 mm]
Weight	0.035 lbs [15.88 g]

Click the following link (or enter part number in "SEARCH" on website) to obtain additional part information including price, inventory and certifications: SHV Plug Connector Crimp/Solder Attachment for RG58, RG303, RG141, PE-C195, PE-P195, LMR-195, 0.195 inch PE4194

Pasternack Enterprises, Inc. • P.O. Box 16759, Irvine, CA 92623
Phone: (866) 727-8376 or (949) 261-1920 • **Fax:** (949) 261-7451
Sales@Pasternack.com • Techsupport@Pasternack.com

© 2016 Pasternack Enterprises All Rights Reserved

SHV Plug Connector Crimp/Solder Attachment for RG58, RG303, RG141, PE-C195, PE-P195, LMR-195, 0.195 inch

Material Specifications

Description	Material	Plating
Contact	Brass	Gold 30 µin minimum
Insulation	PTFE	
Body	Brass	Nickel 100 µin minimum
Coupling Nut	Brass	Nickel 100 µin minimum
Crimp Sleeve	Brass	Nickel

Environmental Specifications

Temperature

Operating Range -65 to +165 deg C

Compliance Certifications (see product page for current document)

Plotted and Other Data

Notes:

SHV Plug Connector Crimp/Solder Attachment for RG58, RG303, RG141, PE-C195, PE-P195, LMR-195, 0.195 inch from Pasternack Enterprises has same day shipment for domestic and International orders. Our RF, microwave and millimeter wave products maintain a 99% availability and are part of the broadest selection in the industry.

Click the following link (or enter part number in "SEARCH" on website) to obtain additional part information including price, inventory and certifications: SHV Plug Connector Crimp/Solder Attachment for RG58, RG303, RG141, PE-C195, PE-P195, LMR-195, 0.195 inch PE4194

URL: https://www.pasternack.com/shv-plug-standard-rg58-connector-pe4194-p.aspx

The information contained in this document is accurate to the best of our knowledge and representative of the part described herein. It may be necessary to make modifications to the part and/or the documentation of the part, in order to implement improvements. Pasternack reserves the right to make such changes as required. Unless otherwise stated, all specifications are nominal. Pasternack does not make any representation or warranty regarding the suitability of the part described herein for any particular purpose, and Pasternack does not assume any liability arising out of the use of any part or documentation.

Pasternack Enterprises, Inc. • P.O. Box 16759, Irvine, CA 92623
Phone: (866) 727-8376 or (949) 261-1920 • **Fax:** (949) 261-7451
Sales@Pasternack.com • Techsupport@Pasternack.com

© 2016 Pasternack Enterprises All Rights Reserved

PE4194 CAD Drawing

SHV Plug Connector Crimp/Solder Attachment for RG58, RG303, RG141, PE-C195, PE-P195, LMR-195, 0.195 inch

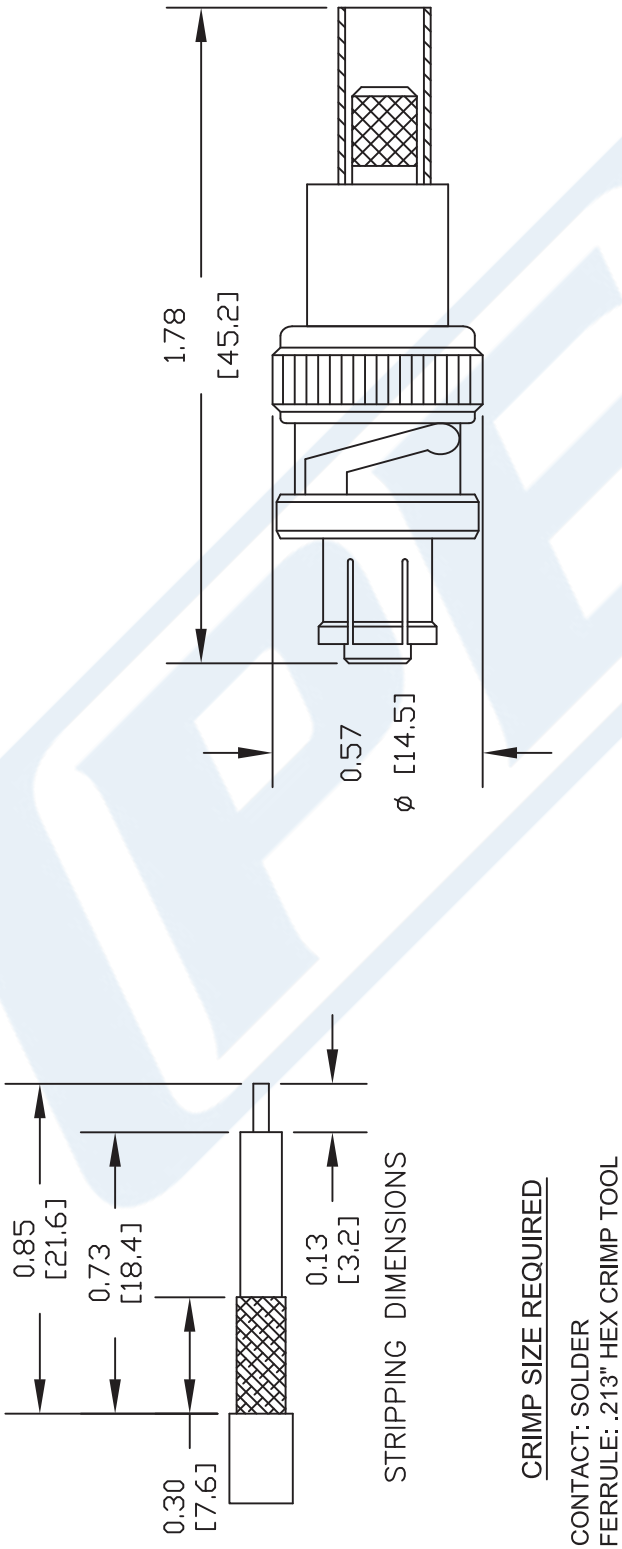

NOTES:
1. UNLESS OTHERWISE SPECIFIED ALL DIMENSIONS ARE NOMINAL.
2. ALL SPECIFICATIONS ARE SUBJECT TO CHANGE WITHOUT NOTICE AT ANY TIME.
3. DIMENSIONS ARE IN INCHES [mm].
4. FITS MIL-C-17 AND EQUIVALENT CABLES.

DWG TITLE **PE4194**

REV. -	FSCM NO. 53919	CAD FILE 042309	SCALE N/A	SIZE A	147

PASTERNACK®
Pasternack Enterprises, Inc.
P.O. Box 16759 | Irvine | CA | 92623
Phone: (949) 261-1920 | **Fax:** (949) 261-7451
Website: www.pasternack.com | **E-Mail:** sales@pasternack.com

© 2016 Pasternack Enterprises All Rights Reserved

PASTERNACK
an INFINITE brand

40kV Flexible RG303 High Voltage Coax Cable Single Shielded with Red PUR Jacket

RF Cables
Technical Data Sheet

RG303HV

Configuration

- 1 Shield(s)

Features

- Voltage rating up to 40kV
- Low Signal Attenuation
- Robust Insulation
- Flexible and Durable

Applications

- Semiconductor Testing
- Radar Systems
- Broadcast Stations
- Research and Development
- Military and Defense

Description

RG303HV part number from Pasternack is a coax cable that is flexible. Pasternack's flexible coax RF cable has an im-pedance of 50 Ohm and PE dielectric. Our RG303HV coax cable is constructed with a 0.169-inch jacket made of FEP. Our coax cable from Pasternack has a maximum frequency of 3000 MHz. This red colored coax cable has a 0.138-inch shield layer of Silver Copper. Additional specifications for this RG303HV single-shielded RF coaxial cable are on our downloadable PDF datasheet above. Our RG303HV coax cable has a maximum operating temperature of 70 degrees C. This 40kV red colored flexible RF cable with a 50 Ohm impedance has a typical insertion loss/maximum attenuation of 0.22 dB/ft at a frequency of 3000 MHz. The RG303HV flexible RF cable has a silver center conductor with a copper clad aluminum conductor plating.

The RG303 high-voltage RF cable is engineered specifically for radio frequency applications that require the handling of ex-tremely high voltages. With a rated voltage of 40kV, this cable is designed to safely and efficiently transmit high-voltage RF signals. It is commonly utilized in industrial applications where reliable and robust RF signal distribution is critical. The RG303 cable is constructed with high-quality insulation materials and conductors to minimize signal loss and ensure optimal perfor-mance. Adhering to safety guidelines and proper installation practices are essential when working with this cable to maintain electrical safety and preserve signal integrity. Pasternack RG303HV coax cables are part of over 40,000 RF, microwave, and millimeter wave components. These flexible RF cables and our other RF parts are available for same-day shipping worldwide. Custom RF cable assemblies using RG303HV other coax can be built and shipped the same business day as well.

Electrical Specifications

Description	Minimum	Typical	Maximum	Units
Frequency Range	DC		3	GHz
Impedance		50		Ohms
Operating Voltage (DC)			40,000	Vdc
Nominal Capacitance		308.4 [1,011.81]		pF/ft [pF/m]
Test Voltage (Conductor/Braid)		80		kVoc/1min
Test Voltage (Spark Test, Core)		15		kVac
Test Voltage (Spark Test, Jacket)		5		kVac
Test Voltage (Type Test)		64		kVoc

Click the following link (or enter part number in "SEARCH" on website) to obtain additional part information including price, inventory and certifications: 40kV Flexible RG303 High Voltage Coax Cable Single Shielded with Red PUR Jacket RG303HV

Pasternack Enterprises, Inc. • P.O. Box 16759, Irvine, CA 92623
Phone: (866) 727-8376 or (949) 261-1920 • **Fax:** (949) 261-7451
Sales@Pasternack.com • Techsupport@Pasternack.com

© 2020 Pasternack Enterprises All Rights Reserved

40kV Flexible RG303 High Voltage Coax Cable Single Shielded with Red PUR Jacket

RF Cables
Technical Data Sheet

RG303HV

Performance by Frequency Band

Description	F1	F2	F3	F4	F5	Units
Frequency	0.05	0.4	1	3		GHz
Attenuation, Typ	2.48	7.35	12.09	22.52		dB/100ft
	8.14	24.11	39.67	73.88		dB/100m

Mechanical Specifications

Diameter	0.169 in [4.29 mm}
Weight	0.027 lbs/ft [0.04 kg/m]
Min. Bend Radius (Repeated)	0.788 in [20.02 mm]

Construction Specifications

Description	Material and Plating	Diameter
Inner Conductor	Silver, Copper Clad Aluminum, Strand	0.037 in [0.94 mm]
Conductor Type		
Dielectric	FEP	0.116 in [2.95 mm]
First Shield	Silver Copper	0.138 in [3.51 mm]
Jacket	FEP, Red	0.169 in [4.29 mm]

Environmental Specifications

Temperature

Operating Range	-65 to +200 deg C

Click the following link (or enter part number in “SEARCH” on website) to obtain additional part information including price, inventory and certifications: 40kV Flexible RG303 High Voltage Coax Cable Single Shielded with Red PUR Jacket RG303HV

Pasternack Enterprises, Inc. • P.O. Box 16759, Irvine, CA 92623
Phone: (866) 727-8376 or (949) 261-1920 • **Fax:** (949) 261-7451
Sales@Pasternack.com • Techsupport@Pasternack.com

© 2020 Pasternack Enterprises All Rights Reserved

40kV Flexible RG303 High Voltage Coax Cable Single Shielded with Red PUR Jacket

Compliance Certifications (see product page for current document)

Plotted and Other Data

Notes:

- 1) All tests preformed in accordacne with MIL-DTL-17 (current issue).
  2) All materials are RoHS and REACH compliant.

40kV Flexible RG303 High Voltage Coax Cable Single Shielded with Red PUR Jacket from Pasternack Enterprises has same day shipment for domestic and International orders. Our RF, microwave and millimeter wave products maintain a 99.4% availability and are part of the broadest selection in the industry.

Click the following link (or enter part number in “SEARCH” on website) to obtain additional part information including price, inventory and certifications: 40kV Flexible RG303 High Voltage Coax Cable Single Shielded with Red PUR Jacket RG303HV

URL: https://www.pasternack.com/flexible-rg303-fep-jacket-silver-copper-outer-conductor-single-shielded-rg303hv-p.aspx

The information contained in this document is accurate to the best of our knowledge and representative of the part described herein. It may be necessary to make modifications to the part and/or the documentation of the part, in order to implement improvements. Pasternack reserves the right to make such changes as required. Unless otherwise stated, all specifications are nominal. Pasternack does not make any representation or warranty regarding the suitability of the part described herein for any particular purpose, and Pasternack does not assume any liability arising out of the use of any part or documentation.

Pasternack Enterprises, Inc. • P.O. Box 16759, Irvine, CA 92623
Phone: (866) 727-8376 or (949) 261-1920 • **Fax:** (949) 261-7451
Sales@Pasternack.com • Techsupport@Pasternack.com

© 2020 Pasternack Enterprises All Rights Reserved

RG303HV CAD Drawing

40kV Flexible RG303 High Voltage Coax Cable Single Shielded with Red PUR Jacket

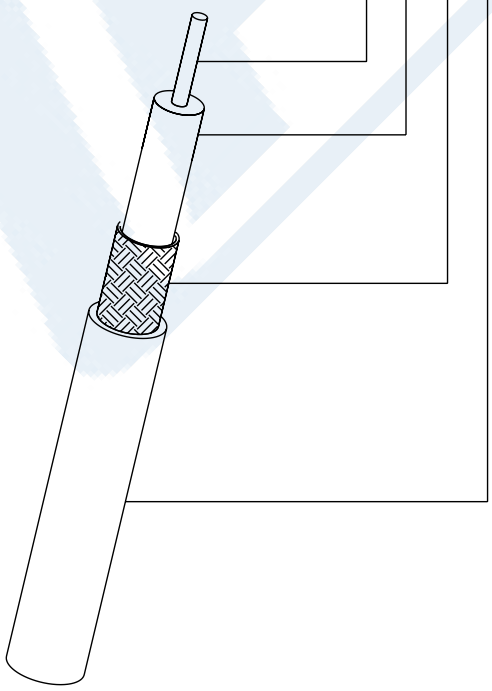

Center Conductor	Ø.037 [0.94]	Silver Copper
Dielectric	Ø.116 [2.95]	FEP (Fluorinated Ethylene Propylene)
Braid	Ø.138 [3.51]	Silver Copper
Jacket	Ø.169 [4.29]	Red FEP (Fluorinated Ethylene Propylene)

REVISION

ZONE	REV	DESCRIPTION	DATE	CHANGED BY	APPROVED
	A	INITIAL RELEASE	05/05/2023	PSRINIVAS	AGANWANI

UNLESS OTHERWISE SPECIFIED
LEADING DIMENSIONS ARE INCHES
DIMENSIONS IN [ ] ARE MILLIMETERS

TOLERANCES:
.X = ± .2 [.5] | FRACTIONS ± 1/32
.XX = ± .02 [.5] | ANGLES ± 1°
.XXX = ± .005 [.13]

CABLE LENGTH TOLERANCES:
≤12 [305] = +1 [25] / -0
>12 [305] ≤ 60 [1524] = +2 [51] / -0
>60 [1524] ≤ 120 [3048] = +4 [102] / -0
>120 [3048] ≤ 300 [7620] = +6 [152] / -0
>300 [7620] = +5% / -0

ALL DIMENSIONS ARE FOR REFERENCE ONLY AND SUBJECT TO CHANGE WITHOUT NOTICE.

PASTERNACK® an INFINITE brand

Website: www.Pasternack.com
Phone: 1.866.727.8376 | 1.949.261.1920

INTERPRET ALL DIMENSIONS AND TOLERANCES PER ASME Y14.5

SCALE: NONE | SHEET: 1 OF 1

DESCRIPTION: Flexible RG303 High Voltage Coax Cable Single Shielded with Red PUR Jacket

SIZE	CAGE CODE	DRAWN BY	ITEM NO.	REV
A	53919	PSRINIVAS	RG303HV	A

THE INFORMATION CONTAINED IN THIS DRAWING IS THE SOLE PROPERTY OF INFINITE ELECTRONICS, INC. ANY REPRODUCTION IN PART OR WHOLE WITHOUT THE WRITTEN PERMISSION OF INFINITE ELECTRONICS, INC. IS PROHIBITED. THESE COMMODITIES, TECHNOLOGY OR SOFTWARE WERE EXPORTED FROM THE UNITED STATES IN ACCORDANCE WITH THE EXPORT ADMINISTRATION REGULATIONS. DIVERSION CONTRARY TO U.S. LAW PROHIBITED.

T-Rev.D2

© 2020 Pasternack Enterprises All Rights Reserved