MATERIALS	
BODY	BRASS NICKEL PLATED
CONTACT	SILVER PLATED
INSULATOR	PTFE

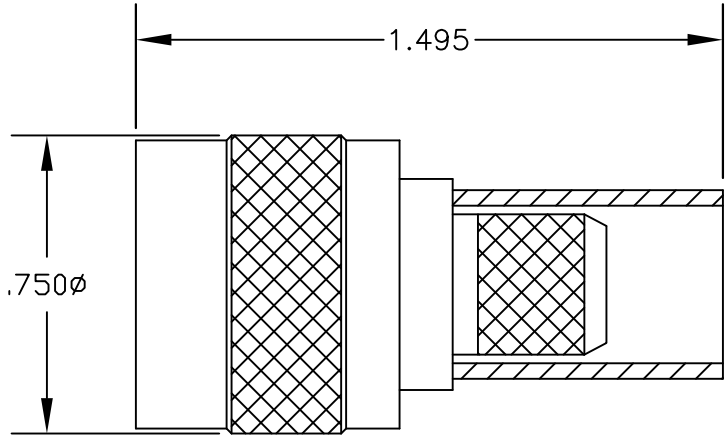

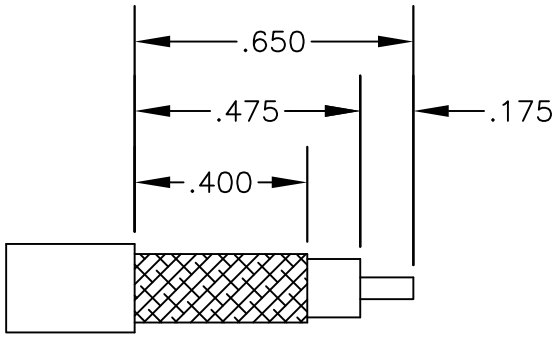

STRIPPING DIMENSIONS

CRIMP SIZE REQUIRED

CONTACT: SOLDER

FERRULE: .429" HEX CRIMP TOOL

PASTERNACK ENTERPRISES®
ESTABLISHED 1972

PASTERNACK ENTERPRISES, INC.
P.O BOX 16759, IRVINE, CA 92623
PHONE (949) 261-1920 FAX (949) 261-7451

WEB ADDRESS: www.pasternack.com
E-MAIL ADDRESS: sales@pasternack.com

COAXIAL & FIBER OPTICS

DWG TITLE	DES.			
PE4518	C MALE, CRIMP ATTACHMENT FOR RG8 & RG213			
SIZE A	FSCM NO. 53919	CAD FILE 052202	SCALE N/A	127

NOTES:
1. UNLESS OTHERWISE SPECIFIED ALL DIMENSIONS ARE NOMINAL.
2. ALL SPECIFICATIONS ARE SUBJECT TO CHANGE WITHOUT NOTICE AT ANY TIME.

UHF Male Connector Clamp/Solder Attachment for RG213, RG214, RG8, RG9, RG11, RG225, RG393, RG144, RG215, RG216

RF Connectors Technical Data Sheet PE44050

Configuration

- UHF Male Connector
- 50 Ohms
- Straight Body Geometry
- RG213, RG214, RG8, RG9, RG11, RG225, RG393, RG144, RG215, RG216 Interface Type
- Clamp/Solder Attachment

Features

- Max. Operating Frequency 300 MHz
- Good VSWR of 1.3:1
- Gold Plated Brass Contact

Applications

- General Purpose Test
- Custom Cable Assemblies

Description

Pasternack's PE44050 UHF male connector with clamp/solder attachment for RG213, RG214, RG8, RG9, RG11, RG225, RG393, RG144, RG215 and RG216 is part of our full line of RF components available for same-day shipping. Our UHF male connector operates up to a maximum frequency of 300 MHz and offers good VSWR of 1.3:1.

Our UHF male connector PE44050 datasheet specifications and drawing with dimensions are shown below in this PDF. Pasternack's broad catalog of RF, microwave and millimeter wave connectors allows designers to configure and customize their signal connections however they like. Whether the need is to provide an I/O for a board design, or simply create a custom cable assembly configuration, Pasternack has the right connector for the job. Pasternack can also expertly build your custom cable assemblies for you and ship same-day.

Electrical Specifications

Description	Minimum	Typical	Maximum	Units
Frequency Range	DC		300	MHz
VSWR			1.3:1	
Operating Voltage (AC)			1,000	Vrms
Insulation Resistance	5,000			MOhms

Mechanical Specifications

Size	
Length	1.44 in [36.58 mm]
Width/Dia.	0.75 in [19.05 mm]
Weight	0.076 lbs [34.47 g]

Click the following link (or enter part number in "SEARCH" on website) to obtain additional part information including price, inventory and certifications: UHF Male Connector Clamp/Solder Attachment for RG213, RG214, RG8, RG9, RG11, RG225, RG393, RG144, RG215, RG216 PE44050

Pasternack Enterprises, Inc. • P.O. Box 16759, Irvine, CA 92623
Phone: (866) 727-8376 or (949) 261-1920 • **Fax:** (949) 261-7451
Sales@Pasternack.com • Techsupport@Pasternack.com

© 2016 Pasternack Enterprises All Rights Reserved

UHF Male Connector Clamp/Solder Attachment for RG213, RG214, RG8, RG9, RG11, RG225, RG393, RG144, RG215, RG216

Material Specifications

Description	Material	Plating
Contact	Brass	Gold
Insulation	PTFE	
Body	Brass	Nickel
Coupling Nut	Brass	Nickel

Environmental Specifications

Temperature

Operating Range -65 to +165 deg C

Compliance Certifications (see product page for current document)

Plotted and Other Data

Notes:

UHF Male Connector Clamp/Solder Attachment for RG213, RG214, RG8, RG9, RG11, RG225, RG393, RG144, RG215, RG216 from Pasternack Enterprises has same day shipment for domestic and International orders. Our RF, microwave and millimeter wave products maintain a 99% availability and are part of the broadest selection in the industry.

Click the following link (or enter part number in "SEARCH" on website) to obtain additional part information including price, inventory and certifications: UHF Male Connector Clamp/Solder Attachment for RG213, RG214, RG8, RG9, RG11, RG225, RG393, RG144, RG215, RG216 PE44050

URL: https://www.pasternack.com/uhf-male-standard-rg213-rg214-rg8-rg9-rg11-rg225-rg393-connector-pe44050-p.aspx

The information contained in this document is accurate to the best of our knowledge and representative of the part described herein. It may be necessary to make modifications to the part and/or the documentation of the part, in order to implement improvements. Pasternack reserves the right to make such changes as required. Unless otherwise stated, all specifications are nominal. Pasternack does not make any representation or warranty regarding the suitability of the part described herein for any particular purpose, and Pasternack does not assume any liability arising out of the use of any part or documentation.

Pasternack Enterprises, Inc. • P.O. Box 16759, Irvine, CA 92623
Phone: (866) 727-8376 or (949) 261-1920 • **Fax:** (949) 261-7451
Sales@Pasternack.com • Techsupport@Pasternack.com

© 2016 Pasternack Enterprises All Rights Reserved

PE44050 CAD Drawing

UHF Male Connector Clamp/Solder Attachment for RG213, RG214, RG8, RG9, RG11, RG225, RG393, RG144, RG215, RG216

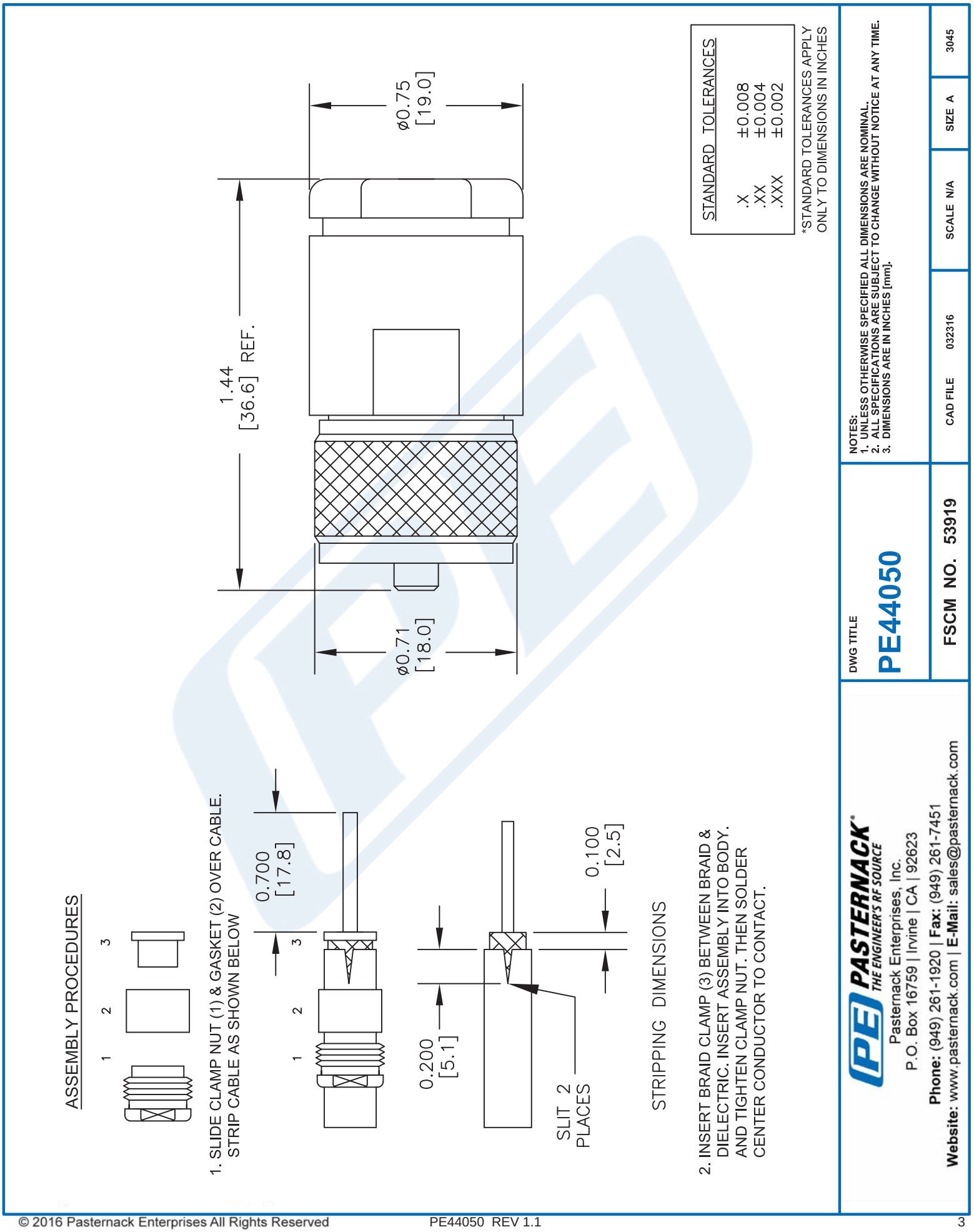

© 2016 Pasternack Enterprises All Rights Reserved

PASTERNACK®
THE ENGINEER'S RF SOURCE

Flexible RG213 Coax Cable Single Shielded with Black PVC Jacket

TECHNICAL DATA SHEET RG213/U

Configuration

Inner Conductor Material and Plating	Copper
Dielectric Type	PE
Shield Materials	Copper Braid
Jacket Material and Color	PVC, Black

Electrical Specifications

Impedance, Ohms	50
Velocity of Propagation, %	66
Maximum Operating Frequency, MHz	1000
Capacitance, pF/ft [pF/m]	30.8 [101.05]

Electrical Specifications by Frequency

Frequency 1

Frequency, MHz	100
Attenuation, dB/100ft [dB/100m]	2.1 [6.89]

Frequency 2

Frequency, MHz	400
Attenuation, dB/100ft [dB/100m]	4.8 [15.75]

Frequency 3

Frequency, MHz	1000
Attenuation, dB/100ft [dB/100m]	8 [26.25]

Mechanical Specifications

Inner Conductor

Number of Strands	7
Material	Copper
Diameter, in [mm]	0.09 [2.29]

Dielectric:

Type	PE
Diameter, in [mm]	0.285 [7.24]

Shield:

Number of	1
Material 1	Copper Braid
Diameter, in [mm]	0.314 [7.98]

Click the following link (or enter part number in "SEARCH" on website) to obtain additional part information including price, inventory and certifications: Flexible RG213 Coax Cable Single Shielded with Black PVC Jacket RG213/U

Pasternack Enterprises, Inc. • P.O. Box 16759, Irvine, CA 92623
Phone: (866) 727-8376 or (949) 261-1920 • **Fax:** (949) 261-7451
Sales@Pasternack.com • Techsupport@Pasternack.com

© 2015 Pasternack Enterprises All Rights Reserved

Flexible RG213 Coax Cable Single Shielded with Black PVC Jacket

Jacket:

Material	PVC
Diameter, in [mm]	0.405 [10.29]
Color	Black
Weight, lbs/ft [Kg/m]	0.115 [0.17]

Compliance Certifications (visit www.Pasternack.com for current document)

RoHS Compliant	
REACH Compliant	06/18/2012

Plotted and Other Data

Notes:

- Values at +25 °C, sea level
- Max. Operating Voltage(VRMS): 5000

Flexible RG213 Coax Cable Single Shielded with Black PVC Jacket from Pasternack Enterprises has same day shipment for domestic and International orders. Our RF, microwave and millimeter wave products maintain a 99% availability and are part of the broadest selection in the industry.

Click the following link (or enter part number in "SEARCH" on website) to obtain additional part information including price, inventory and certifications: Flexible RG213 Coax Cable Single Shielded with Black PVC Jacket RG213/U

URL: http://www.pasternack.com/flexible-0.405-rg213-50-ohm-coax-cable-pvc-jacket-rg213-u-p.aspx

The information contained in this document is accurate to the best of our knowledge and representative of the part described herein. It may be necessary to make modifications to the part and/or the documentation of the part, in order to implement improvements. Pasternack reserves the right to make such changes as required. Unless otherwise stated, all specifications are nominal. Pasternack does not make any representation or warranty regarding the suitability of the part described herein for any particular purpose, and Pasternack does not assume any liability arising out of the use of any part or documentation.

Pasternack Enterprises, Inc. • P.O. Box 16759, Irvine, CA 92623
Phone: (866) 727-8376 or (949) 261-1920 • **Fax:** (949) 261-7451
Sales@Pasternack.com • Techsupport@Pasternack.com

© 2015 Pasternack Enterprises All Rights Reserved

RG213/U CAD Drawing

Flexible RG213 Coax Cable Single Shielded with Black PVC Jacket

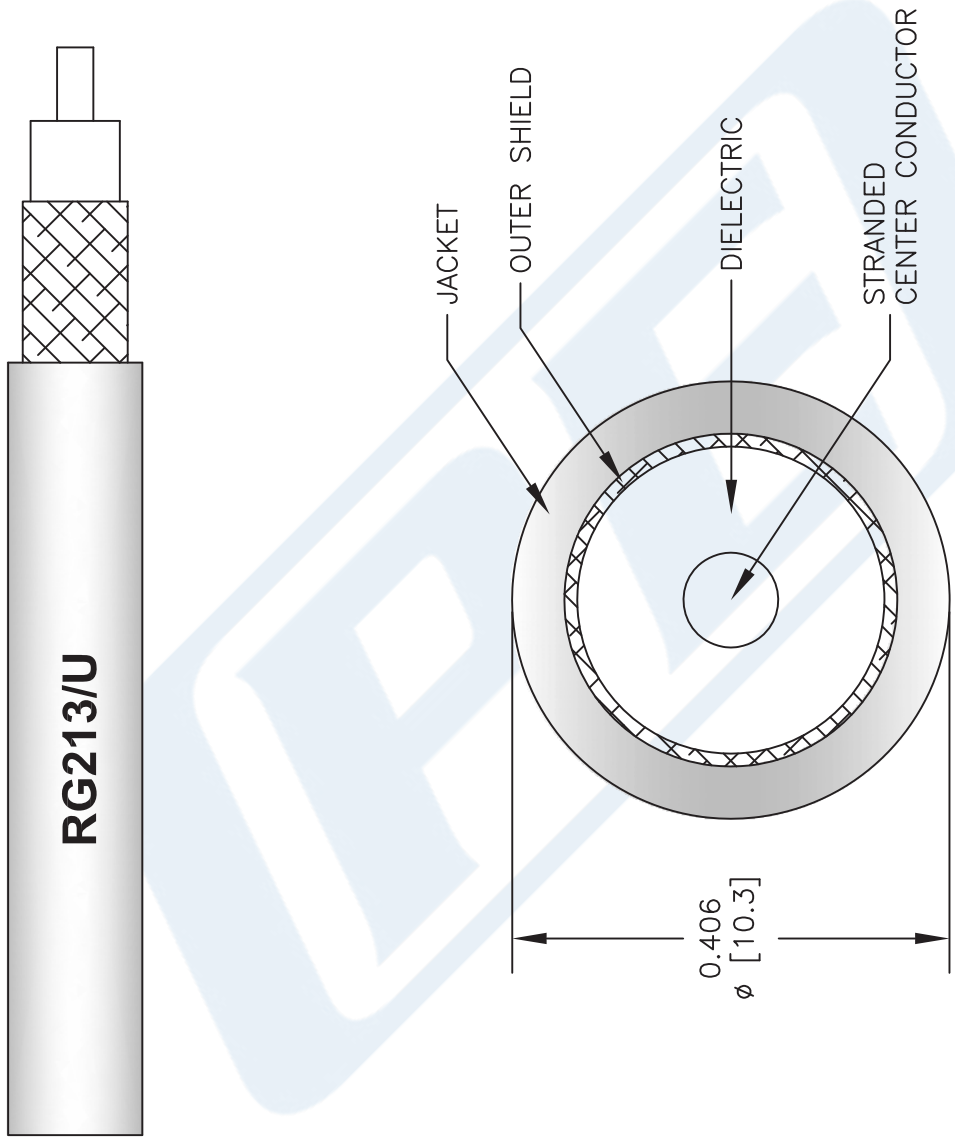

NOTES:
1. UNLESS OTHERWISE SPECIFIED ALL DIMENSIONS ARE NOMINAL.
2. ALL SPECIFICATIONS ARE SUBJECT TO CHANGE WITHOUT NOTICE AT ANY TIME.
3. DIMENSIONS ARE IN INCHES [mm].

DWG TITLE
RG213/U

FSCM NO. 53919

CAD FILE 061312-B | SCALE N/A | SIZE A | 2233

PASTERNACK®
Pasternack Enterprises, Inc.
P.O. Box 16759 | Irvine | CA | 92623
Phone: (949) 261-1920 | **Fax:** (949) 261-7451
Website: www.pasternack.com | **E-Mail:** sales@pasternack.com

© 2015 Pasternack Enterprises All Rights Reserved