PASTERNACK
an INFINITE brand

SMB Plug Connector Crimp/Solder Attachment for RG316-DS, RG188-DS

RF Connectors Technical Data Sheet

PE44792

Configuration

- SMB Plug Connector
- MIL-STD-348A
- 50 Ohms
- Straight Body Geometry
- Connector Interface Types: RG316-DS, RG188-DS

Features

- Max. Operating Frequency 4 GHz
- Gold Plated Beryllium Copper Contact
- 30µ in. minimum contact plating

Applications

- General Purpose Test
- Custom Cable Assemblies

Description

Pasternack's PE44792 SMB plug connector with crimp/solder attachment for RG316-DS and RG188-DS is part of our full line of RF components available for same-day shipping. Our SMB plug connector operates up to a maximum frequency of 4 GHz.

Our SMB plug connector PE44792 datasheet specifications and drawing with dimensions are shown below in this PDF. Pasternack's broad catalog of RF, microwave and millimeter wave connectors allows designers to configure and customize their signal connections however they like. Whether the need is to provide an I/O for a board design, or simply create a custom cable assembly configuration, Pasternack has the right connector for the job. Pasternack can also expertly build your custom cable assemblies for you and ship same-day.

Electrical Specifications

Description	Minimum	Typical	Maximum	Units
Frequency Range	DC		4	GHz
Operating Voltage (AC)			335	Vrms
Dielectric Withstanding Voltage (AC)			1,000	Vrms

Performance by Frequency

Description	F1	F2	F3	F4	F5	Units
Frequency Range	DC to 3					GHz
VSWR, Max	1.37:1					

Mechanical Specifications

Size

Length	0.91 in [23.11 mm]
Width/Dia.	0.256 in [6.50 mm]
Height	3.3 in [83.82 mm]

Click the following link (or enter part number in "SEARCH" on website) to obtain additional part information including price, inventory and certifications: SMB Plug Connector Crimp/Solder Attachment for RG316-DS, RG188-DS PE44792

Pasternack Enterprises, Inc. • P.O. Box 16759, Irvine, CA 92623
Phone: (866) 727-8376 or (949) 261-1920 • **Fax:** (949) 261-7451
Sales@Pasternack.com • Techsupport@Pasternack.com

© 2020 Pasternack Enterprises All Rights Reserved

SMB Plug Connector Crimp/Solder Attachment for RG316-DS, RG188-DS

RF Connectors
Technical Data Sheet

PE44792

Weight	0.075 lbs [34.02 g]

Material Specifications

Description	Material	Plating
Contact	Beryllium Copper	Gold 30µ in. minimum
Insulation	Teflon	
Body	Brass	Nickel 100µ in. minimum

Environmental Specifications

Temperature

Operating Range	-65 to +165 deg C

Compliance Certifications (see product page for current document)

Plotted and Other Data

Notes:

SMB Plug Connector Crimp/Solder Attachment for RG316-DS, RG188-DS from Pasternack Enterprises has same day shipment for domestic and International orders. Our RF, microwave and millimeter wave products maintain a 99.4% availability and are part of the broadest selection in the industry.

Click the following link (or enter part number in “SEARCH” on website) to obtain additional part information including price, inventory and certifications: SMB Plug Connector Crimp/Solder Attachment for RG316-DS, RG188-DS PE44792

URL: https://www.pasternack.com/smb-plug-rg316-ds-rg188-ds-connector-pe44792-p.aspx

The information contained in this document is accurate to the best of our knowledge and representative of the part described herein. It may be necessary to make modifications to the part and/or the documentation of the part, in order to implement improvements. Pasternack reserves the right to make such changes as required. Unless otherwise stated, all specifications are nominal. Pasternack does not make any representation or warranty regarding the suitability of the part described herein for any particular purpose, and Pasternack does not assume any liability arising out of the use of any part or documentation.

Pasternack Enterprises, Inc. • P.O. Box 16759, Irvine, CA 92623
Phone: (866) 727-8376 or (949) 261-1920 • **Fax:** (949) 261-7451
Sales@Pasternack.com • Techsupport@Pasternack.com

© 2020 Pasternack Enterprises All Rights Reserved

PE44792 CAD Drawing

SMB Plug Connector Crimp/Solder Attachment for RG316-DS, RG188-DS

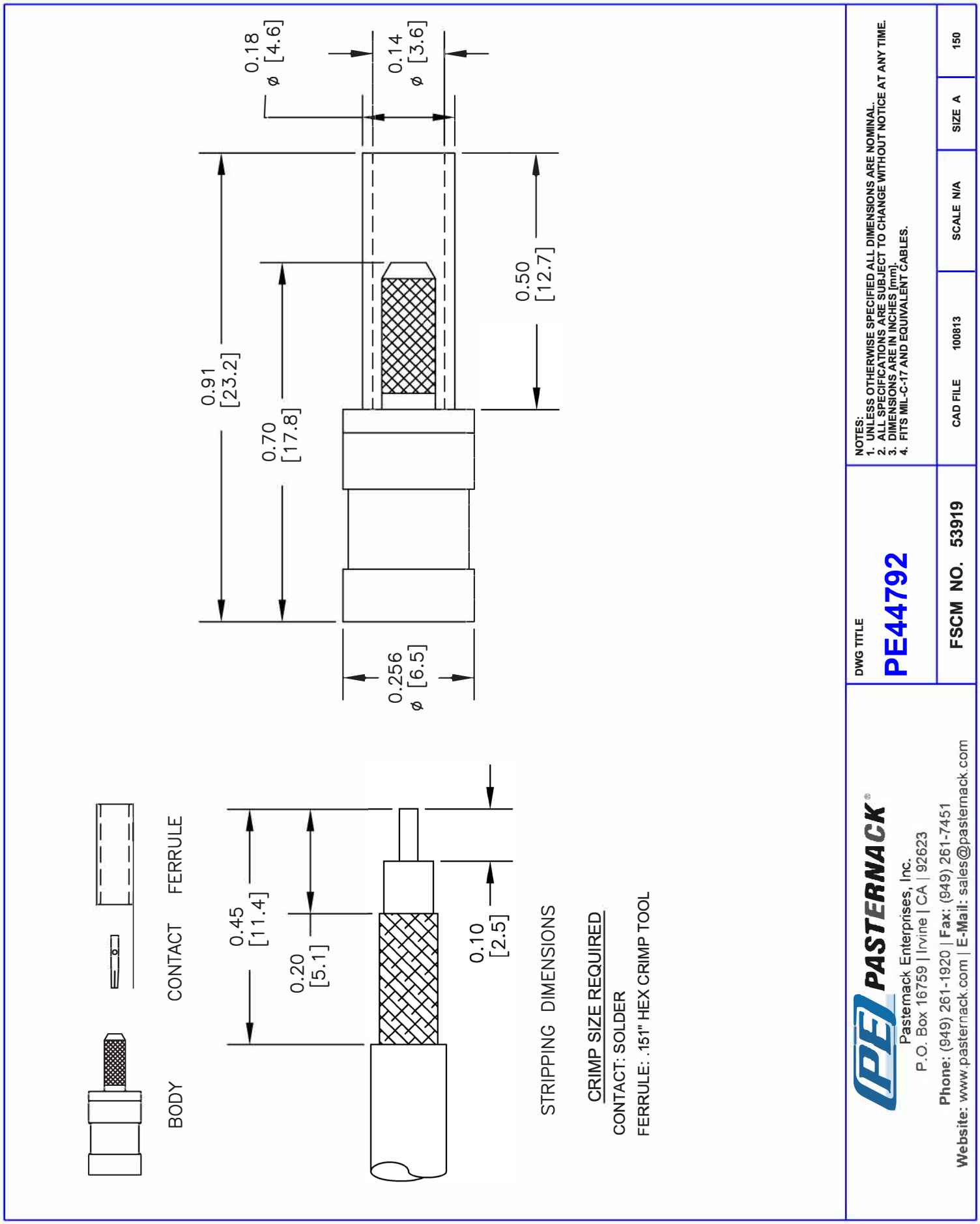

PASTERNACK®
THE ENGINEER'S RF SOURCE

Banana Plug Connector Crimp/Solder Attachment for RG188-DS, RG316-DS

TECHNICAL DATA SHEET PE45164

Configuration

Connector	Banana Plug
Connector Interface Type	RG188-DS, RG316-DS
Attachment Method (Shield/Contact)	Crimp/Solder
Body Style	Straight

Electrical Specifications

Impedance	0 Ohms

Mechanical Specifications

Size

Length	2.54 in [64.52 mm]
Width/Dia.	1.175 in [29.85 mm]
Height	0.65 in [16.51 mm]
Weight	0.041 lbs [18.6 g]

Connector

Type	Banana Plug
Contact Material and Plating	Brass, Nickel
Body Material and Plating	Brass, Nickel
Dielectric Type	ABS

Compliance Certifications (visit www.Pasternack.com for current document)

Not RoHS Compliant

Plotted and Other Data

Notes:

- Values at +25 °C, sea level

Banana Plug Connector Crimp/Solder Attachment for RG188-DS, RG316-DS from Pasternack Enterprises has same day shipment for domestic and International orders. Our RF, microwave and millimeter wave products maintain a 99% availability and are part of the broadest selection in the industry.

Click the following link (or enter part number in "SEARCH" on website) to obtain additional part information including price, inventory and certifications: Banana Plug Connector Crimp/Solder Attachment for RG188-DS, RG316-DS PE45164

URL: http://www.pasternack.com/banana-plug-rg188-ds-rg316-ds-connector-pe45164-p.aspx

The information contained in this document is accurate to the best of our knowledge and representative of the part described herein. It may be necessary to make modifications to the part and/or the documentation of the part, in order to implement improvements. Pasternack reserves the right to make such changes as required. Unless otherwise stated, all specifications are nominal. Pasternack does not make any representation or warranty regarding the suitability of the part described herein for any particular purpose, and Pasternack does not assume any liability arising out of the use of any part or documentation.

Pasternack Enterprises, Inc. • P.O. Box 16759, Irvine, CA 92623
Phone: (866) 727-8376 or (949) 261-1920 • **Fax:** (949) 261-7451
Sales@Pasternack.com • Techsupport@Pasternack.com

© 2015 Pasternack Enterprises All Rights Reserved

PE45164 CAD Drawing

Banana Plug Connector Crimp/Solder Attachment for RG188-DS, RG316-DS

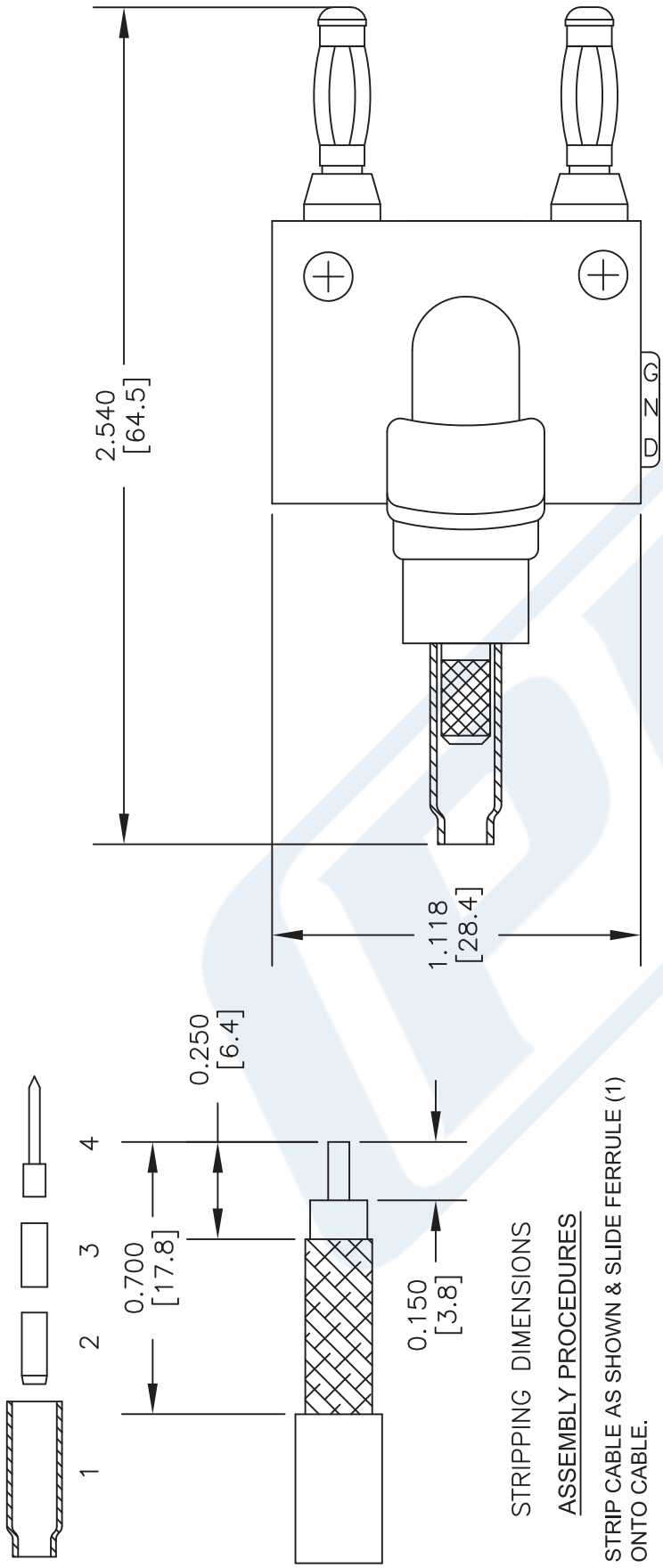

CRIMP SIZE REQUIRED

CONTACT: .068" HEX CRIMP TOOL
FERRULE: .178" HEX CRIMP TOOL

STRIPPING DIMENSIONS

ASSEMBLY PROCEDURES

1. STRIP CABLE AS SHOWN & SLIDE FERRULE (1) ONTO CABLE.
2. FLARE END OF CABLE BRAID & SLIDE METAL SPACER (2) & PTFE (3) SPACER OVER CABLE DIELECTRIC.
3. THE CONTACT (4) SHOULD BUTT AGAINST THE DIELECTRIC & PTFE SPACER. CRIMP CONTACT TO CABLE CENTER CONDUCTOR.
4. INSTALL CABLE ASSEMBLY INTO BODY SO THAT THE INNER FERRULE PORTION OF BODY SLIDES UNDER BRAID. PUSH CABLE ASSEMBLY FORWARD UNTIL CONTACT SITS IN PLACE. SLIDE FERRULE OVER BRAID AND UP AGAINST CONNECTOR BODY & CRIMP.

NOTES:
1. UNLESS OTHERWISE SPECIFIED ALL DIMENSIONS ARE NOMINAL.
2. ALL SPECIFICATIONS ARE SUBJECT TO CHANGE WITHOUT NOTICE AT ANY TIME.
3. DIMENSIONS ARE IN INCHES [mm].
4. FITS MIL-C-17 AND EQUIVALENT CABLES.

DWG TITLE
PE45164

FSCM NO. 53919

CAD FILE 031815 | SCALE N/A | SIZE A | 2233

PASTERNACK® THE ENGINEER'S RF SOURCE
Pasternack Enterprises, Inc.
P.O. Box 16759 | Irvine | CA | 92623
Phone: (949) 261-1920 | **Fax:** (949) 261-7451
Website: www.pasternack.com | **E-Mail:** sales@pasternack.com

© 2015 Pasternack Enterprises All Rights Reserved

Flexible RG316-DS Coax Cable Double Shielded with Tan FEP Jacket

RF Cables
Technical Data Sheet

RG316-DS

Configuration

- Flexible Cable
- 2 Shield(s)

Electrical Specifications

Description	Minimum	Typical	Maximum	Units
Frequency Range	DC		3	GHz
Impedance		50		Ohms
Velocity of Propagation		69.5		%
Shielding Effectiveness	85			dB
Operating Voltage (AC)			1,200	Vrms
Inner Conductor DC Resistance			83.82	Ohms/1000ft
Outer Conductor DC Resistance			5.33	Ohms/1000ft
Nominal Capacitance		28.96 [95.01]		pF/ft [pF/m]
Insulation Resistance	304.8			MOhms/1000ft

Performance by Frequency Band

Description	F1	F2	F3	F4	F5	Units
Frequency	0.1	0.4	1	2	3	GHz
Attenuation, Max	10.97	20.97	37.95	45.05	57.94	dB/100ft
	35.99	68.8	124.51	147.8	190.09	dB/100m
Attenuation, Typ	8.29	17.5	29	39.41	53.55	dB/100ft
	27.2	57.41	95.14	129.3	175.69	dB/100m
Input Power (CW), Max	375	185	120	85	65	Watts

Mechanical Specifications

Diameter	0.114 in [2.9 mm]
Weight	0.015 lbs/ft [0.02 Kg/m]
Min. Bend Radius (Installation)	0.59 in [14.99 mm]
Min. Bend Radius (Repeated)	1.57 in [39.88 mm]

Click the following link (or enter part number in “SEARCH” on website) to obtain additional part information including price, inventory and certifications: Flexible RG316-DS Coax Cable Double Shielded with Tan FEP Jacket RG316-DS

Pasternack Enterprises, Inc. • P.O. Box 16759, Irvine, CA 92623
Phone: (866) 727-8376 or (949) 261-1920 • **Fax:** (949) 261-7451
Sales@Pasternack.com • Techsupport@Pasternack.com

© 2020 Pasternack Enterprises All Rights Reserved

Flexible RG316-DS Coax Cable Double Shielded with Tan FEP Jacket

Construction Specifications

Description	Material and Plating	Diameter
Inner Conductor	Copper Clad Steel, Silver, 7 Strands	0.02 in 0.51 mm
Conductor Type	Stranded	
Dielectric	PTFE	0.06 in [1.52 mm]
First Shield	Silver Plated Copper Braid	
Second Shield	Silver Plated Copper Braid	0.094 in 2.39 mm
Jacket	FEP, Tan	0.114 in [2.9 mm]

Environmental Specifications

Temperature

Operating Range	-55 to +200 deg C
Storage Range	0 to +40 deg C

Compliance Certifications (see product page for current document)

Plotted and Other Data

Notes:

Flexible RG316-DS Coax Cable Double Shielded with Tan FEP Jacket from Pasternack Enterprises has same day shipment for domestic and International orders. Our RF, microwave and millimeter wave products maintain a 99.4% availability and are part of the broadest selection in the industry.

Click the following link (or enter part number in “SEARCH” on website) to obtain additional part information including price, inventory and certifications: Flexible RG316-DS Coax Cable Double Shielded with Tan FEP Jacket RG316-DS

URL: https://www.pasternack.com/flexible-0.114-rg316-ds-50-ohm-coax-cable-fep-jacket-rg316-ds-p.aspx

The information contained in this document is accurate to the best of our knowledge and representative of the part described herein. It may be necessary to make modifications to the part and/or the documentation of the part, in order to implement improvements. Pasternack reserves the right to make such changes as required. Unless otherwise stated, all specifications are nominal. Pasternack does not make any representation or warranty regarding the suitability of the part described herein for any particular purpose, and Pasternack does not assume any liability arising out of the use of any part or documentation.

Pasternack Enterprises, Inc. • P.O. Box 16759, Irvine, CA 92623
Phone: (866) 727-8376 or (949) 261-1920 • **Fax:** (949) 261-7451
Sales@Pasternack.com • Techsupport@Pasternack.com

© 2020 Pasternack Enterprises All Rights Reserved

RG316-DS CAD Drawing

Flexible RG316-DS Coax Cable Double Shielded with Tan FEP Jacket

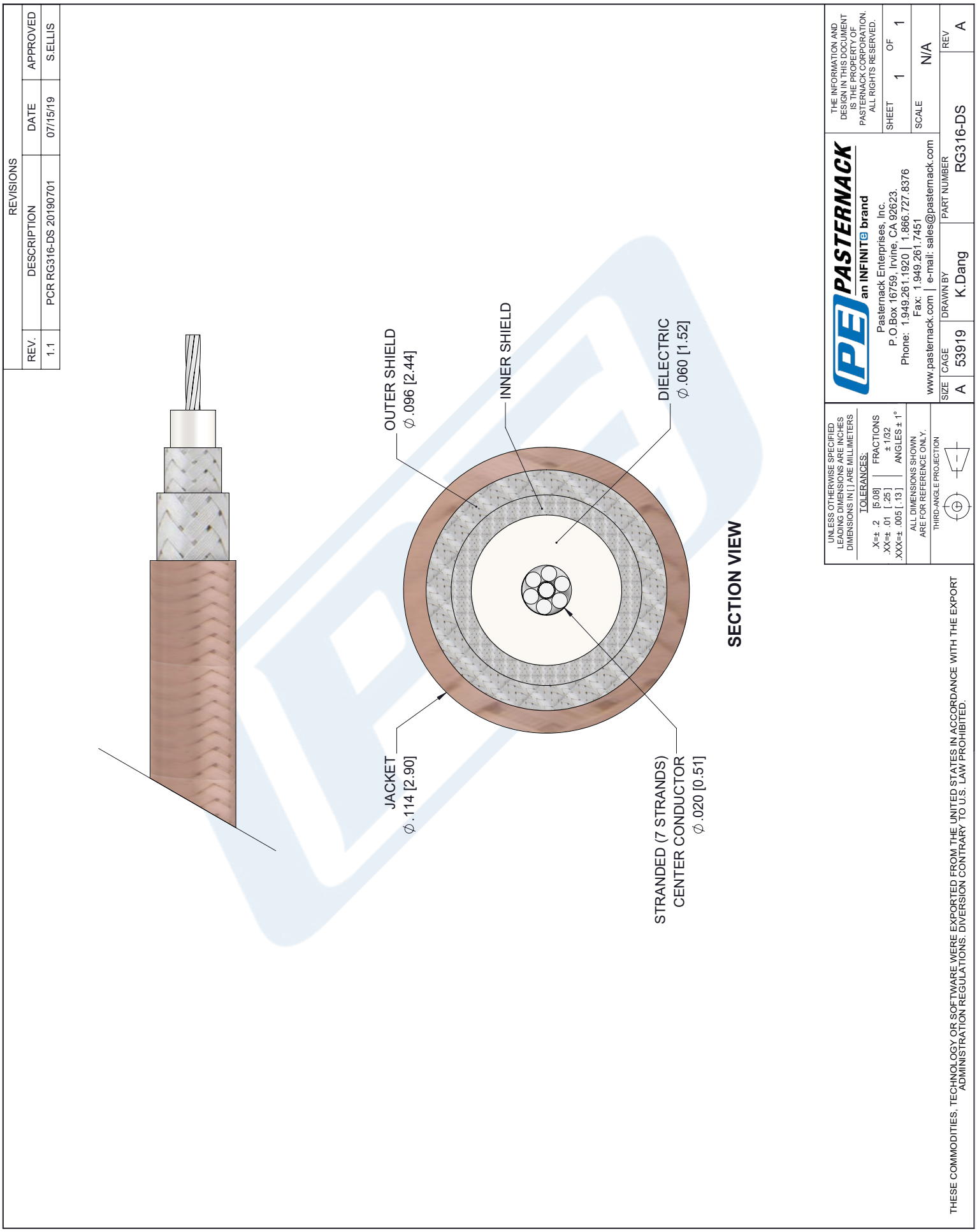

© 2020 Pasternack Enterprises All Rights Reserved