3.5mm Male Connector Clamp/Solder Attachment for PE-SR405AL, PE-SR405FL, PE-SR405FLJ, PE-SR405TN, RG405

RF Connectors Technical Data Sheet PE4982

Configuration

- 3.5mm Male Connector
- 50 Ohms
- Straight Body Geometry
- PE-SR405AL, PE-SR405FL, PE-SR405FLJ, PE-SR405TN, RG405 Interface Type
- Clamp/Solder Attachment
- 5/16 inch Hex

Features

- Gold over Nickel Plated Beryllium Copper Contact
- 50 µin minimum contact plating

Applications

- General Purpose Test
- Custom Cable Assemblies

Description

Pasternack's PE4982 3.5mm male connector with clamp/solder attachment for PE-SR405AL, PE-SR405FL, PE-SR405FLJ, PE-SR405TN and RG405 is part of our full line of RF components available for same-day shipping.

Our 3.5mm male connector PE4982 datasheet specifications and drawing with dimensions are shown below in this PDF. Pasternack's broad catalog of RF, microwave and millimeter wave connectors allows designers to configure and customize their signal connections however they like. Whether the need is to provide an I/O for a board design, or simply create a custom cable assembly configuration, Pasternack has the right connector for the job. Pasternack can also expertly build your custom cable assemblies for you and ship same-day.

Mechanical Specifications

Size

Length	0.94 in [23.88 mm]
Width/Dia.	0.312 in [7.92 mm]
Weight	0.016 lbs [7.26 g]
Mating Torque	8 to 10 in-lbs [0.90 to 1.13 Nm]

Material Specifications

Description	Material	Plating
Contact	Beryllium Copper	Gold over Nickel 50 µin minimum
Insulation	PCTFE	
Body	Passivated Stainless Steel	SAE-AMS-2700
Coupling Nut	Passivated Stainless Steel	SAE-AMS-2700

Click the following link (or enter part number in "SEARCH" on website) to obtain additional part information including price, inventory and certifications: 3.5mm Male Connector Clamp/Solder Attachment for PE-SR405AL, PE-SR405FL, PE-SR-405FLJ, PE-SR405TN, RG405 PE4982

Pasternack Enterprises, Inc. • P.O. Box 16759, Irvine, CA 92623
Phone: (866) 727-8376 or (949) 261-1920 • **Fax:** (949) 261-7451
Sales@Pasternack.com • Techsupport@Pasternack.com

© 2016 Pasternack Enterprises All Rights Reserved

3.5mm Male Connector Clamp/Solder Attachment for PE-SR405AL, PE-SR405FL, PE-SR405FLJ, PE-SR405TN, RG405

Compliance Certifications (see product page for current document)

Plotted and Other Data

Notes:

3.5mm Male Connector Clamp/Solder Attachment for PE-SR405AL, PE-SR405FL, PE-SR405FLJ, PE-SR405TN, RG405 from Pasternack Enterprises has same day shipment for domestic and International orders. Our RF, microwave and millimeter wave products maintain a 99% availability and are part of the broadest selection in the industry.

Click the following link (or enter part number in "SEARCH" on website) to obtain additional part information including price, inventory and certifications: 3.5mm Male Connector Clamp/Solder Attachment for PE-SR405AL, PE-SR405FL, PE-SR405FLJ, PE-SR405TN, RG405 PE4982

URL: https://www.pasternack.com/3.5mm-male-standard-pe-sr405al-pe-sr405fl-rg405-connector-pe4982-p.aspx

The information contained in this document is accurate to the best of our knowledge and representative of the part described herein. It may be necessary to make modifications to the part and/or the documentation of the part, in order to implement improvements. Pasternack reserves the right to make such changes as required. Unless otherwise stated, all specifications are nominal. Pasternack does not make any representation or warranty regarding the suitability of the part described herein for any particular purpose, and Pasternack does not assume any liability arising out of the use of any part or documentation.

Pasternack Enterprises, Inc. • P.O. Box 16759, Irvine, CA 92623
Phone: (866) 727-8376 or (949) 261-1920 • **Fax:** (949) 261-7451
Sales@Pasternack.com • Techsupport@Pasternack.com

© 2016 Pasternack Enterprises All Rights Reserved

PE4982 CAD Drawing

3.5mm Male Connector Clamp/Solder Attachment for PE-SR405AL, PE-SR405FL, PE-SR405FLJ, PE-SR405TN, RG405

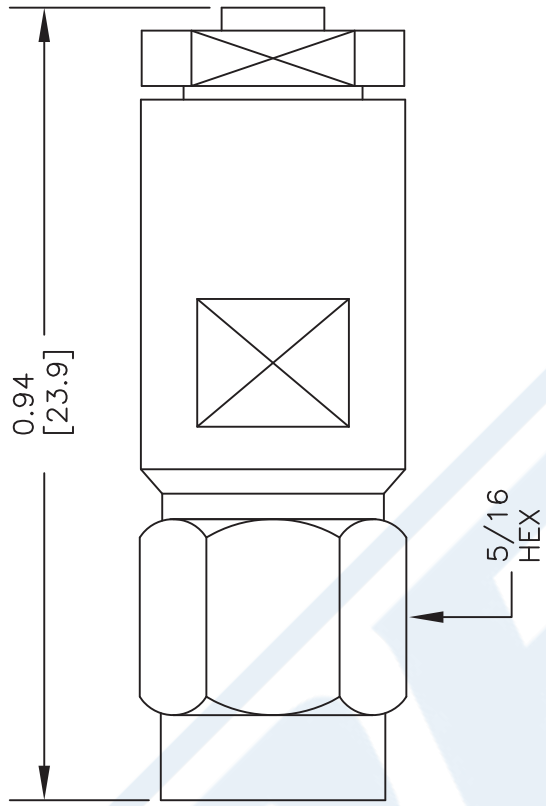

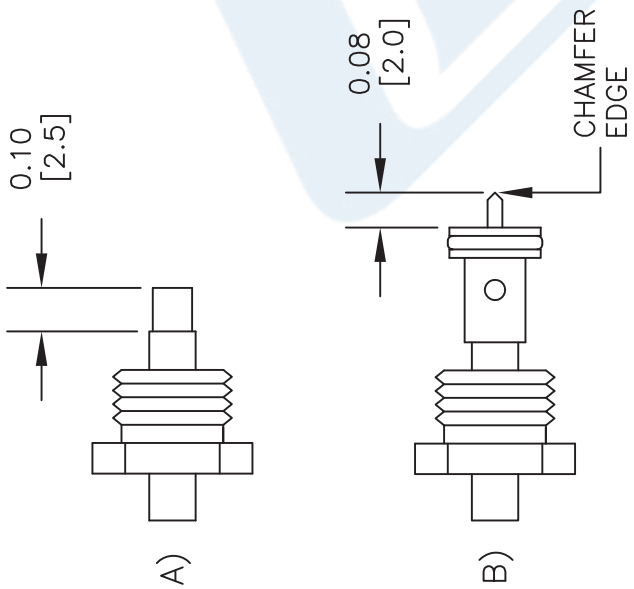

ASSEMBLY PROCEDURES

1. SLIDE CLAMP NUT OVER CABLE. STRIP CABLE AS SHOWN IN (A). DO NOT NICK DIELECTRIC.
2. INSERT CABLE THRU ADAPTER UNTIL IT BOTTOMS OUT. SOLDER OUTER CONDUCTOR TO ADAPTER & TRIM DIELECTRIC AS SHOWN IN (B).
3. SCREW ASSEMBLY INTO BODY & TIGHTEN NUT.

NOTES:
1. UNLESS OTHERWISE SPECIFIED ALL DIMENSIONS ARE NOMINAL.
2. ALL SPECIFICATIONS ARE SUBJECT TO CHANGE WITHOUT NOTICE AT ANY TIME.
3. DIMENSIONS ARE IN INCHES [mm].
4. FITS MIL-C-17 AND EQUIVALENT CABLES.

DWG TITLE
PE4982

FSCM NO. 53919

CAD FILE 100812-B | SCALE N/A | SIZE A | 2233

PASTERNACK®
Pasternack Enterprises, Inc.
P.O. Box 16759 | Irvine | CA | 92623
Phone: (949) 261-1920 | **Fax:** (949) 261-7451
Website: www.pasternack.com | **E-Mail:** sales@pasternack.com

© 2016 Pasternack Enterprises All Rights Reserved

MATERIALS	
BODY	BRASS NICKEL PLATED
CONTACT	GOLD PLATED
INSULATOR	PTFE
SOLDER ADAPTER	BRASS GOLD PLATED

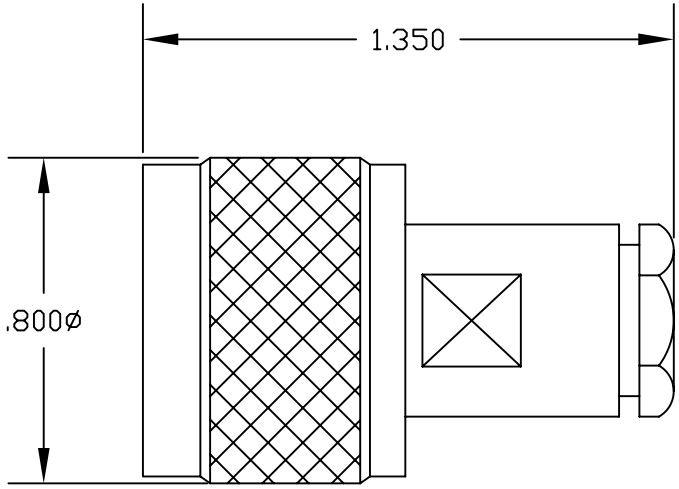

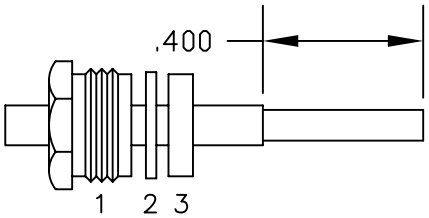

ASSEMBLY (A)

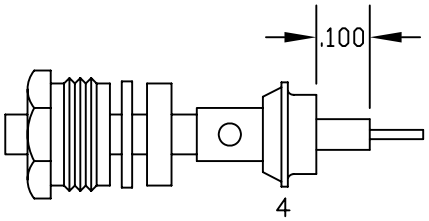

ASSEMBLY (B)

ASSEMBLY PROCEDURES

1. SLIDE CLAMP NUT (1), WASHER (2) & GASKET (3) OVER CABLE. STRIP CABLE AS SHOWN IN ASSEMBLY (A). DO NOT CUT DIELECTRIC.

2. SLIDE ADAPTER (4) OVER CABLE UNTIL ADAPTER (4) BOTTOMS ON OUTER CONDUCTOR. SOLDER ADAPTER (4) TO OUTER CONDUCTOR USING MINIMUM HEAT.

3. STRIP CABLE AS SHOWN IN ASSEMBLY (B). SOLDER CONTACT TO CENTER CONDUCTOR. SLIDE ASSEMBLY FORWARD & TIGHTEN TO BODY.

PASTERNACK ENTERPRISES®
ESTABLISHED 1972

PASTERNACK ENTERPRISES, INC.
P.O BOX 16759, IRVINE, CA 92623
PHONE (949) 261-1920 FAX (949) 261-7451

WEB ADDRESS: www.pasternack.com
E-MAIL ADDRESS: sales@pasternack.com

COAXIAL & FIBER OPTICS

DWG TITLE	DES.
PE4129	N MALE, SOLDER/CLAMP ATTACHMENT FOR RG405, PE-SR405AL & PE-SR405FL

REV. -	FSCM NO. 53919	CAD FILE 042309	SCALE N/A	SIZE A	147

NOTES:
1. UNLESS OTHERWISE SPECIFIED ALL DIMENSIONS ARE NOMINAL.
2. ALL SPECIFICATIONS ARE SUBJECT TO CHANGE WITHOUT NOTICE AT ANY TIME.
3. DIMENSIONS ARE IN INCHES.

RG405 Tinned Coax Cable with Tinned Copper Outer Conductor

RF Cables
Technical Data Sheet

PE-SR405TN

Configuration

- Semi-Rigid Cable
- MIL-C-17
- 1 Shield(s)

Electrical Specifications

Description	Minimum	Typical	Maximum	Units
Frequency Range	DC		40	GHz
Impedance		50		Ohms

Performance by Frequency Band

Description	F1	F2	F3	F4	F5	Units
Frequency	1	10	20			GHz
Attenuation, Typ	22	80	120			dB/100ft
	72.18	262.47	393.7			dB/100m
Input Power (CW), Max	130	35	20			Watts

Mechanical Specifications

Min. Bend Radius (Installation) 0.05 in [1.27 mm]

Construction Specifications

Description	Material and Plating	Diameter
Inner Conductor	Copper Clad Steel, Silver, 1 Strand	0.02 in 0.51 mm
Conductor Type	Solid	
Dielectric	PTFE	0.066 in [1.68 mm]
First Shield	Tinned Copper	0.087 in 2.21 mm

Click the following link (or enter part number in “SEARCH” on website) to obtain additional part information including price, inventory and certifications: RG405 Tinned Coax Cable with Tinned Copper Outer Conductor PE-SR405TN

Pasternack Enterprises, Inc. • P.O. Box 16759, Irvine, CA 92623
Phone: (866) 727-8376 or (949) 261-1920 • **Fax:** (949) 261-7451
Sales@Pasternack.com • Techsupport@Pasternack.com

© 2020 Pasternack Enterprises All Rights Reserved

RG405 Tinned Coax Cable with Tinned Copper Outer Conductor

Environmental Specifications

Temperature

Operating Range	-55 to +125 deg C

Compliance Certifications (see product page for current document)

Plotted and Other Data

Notes:

RG405 Tinned Coax Cable with Tinned Copper Outer Conductor from Pasternack Enterprises has same day shipment for domestic and International orders. Our RF, microwave and millimeter wave products maintain a 99.4% availability and are part of the broadest selection in the industry.

Click the following link (or enter part number in “SEARCH” on website) to obtain additional part information including price, inventory and certifications: RG405 Tinned Coax Cable with Tinned Copper Outer Conductor PE-SR405TN

URL: https://www.pasternack.com/50-ohm-semi-rigid-rg405-tinned-tinned-copper-pe-sr405tn-p.aspx

The information contained in this document is accurate to the best of our knowledge and representative of the part described herein. It may be necessary to make modifications to the part and/or the documentation of the part, in order to implement improvements. Pasternack reserves the right to make such changes as required. Unless otherwise stated, all specifications are nominal. Pasternack does not make any representation or warranty regarding the suitability of the part described herein for any particular purpose, and Pasternack does not assume any liability arising out of the use of any part or documentation.

Pasternack Enterprises, Inc. • P.O. Box 16759, Irvine, CA 92623
Phone: (866) 727-8376 or (949) 261-1920 • **Fax:** (949) 261-7451
Sales@Pasternack.com • Techsupport@Pasternack.com

© 2020 Pasternack Enterprises All Rights Reserved

PE-SR405TN CAD Drawing

RG405 Tinned Coax Cable with Tinned Copper Outer Conductor

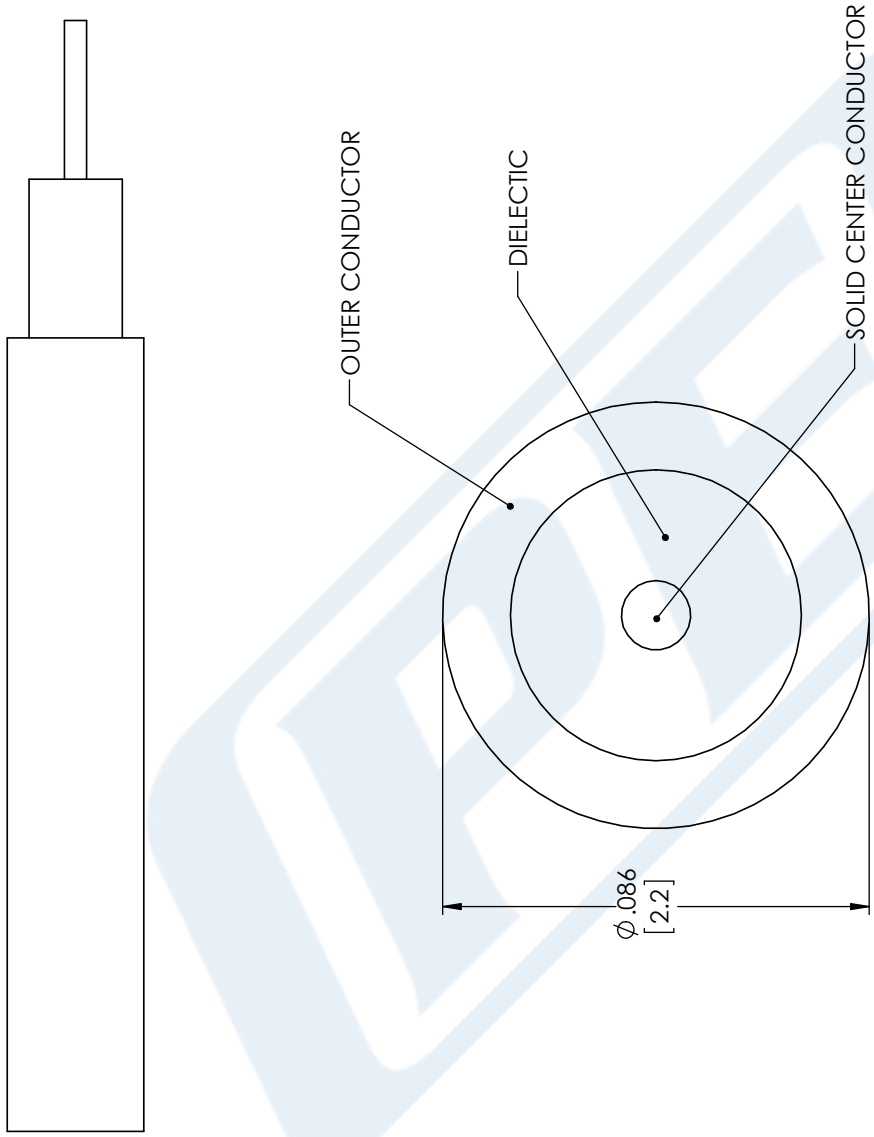

STANDARD TOLERANCES	
.X	±0.2
.XX	±0.01
.XXX	±0.005

*STANDARD TOLERANCES APPLY ONLY TO DIMENSIONS IN INCHES

NOTES:
1. UNLESS OTHERWISE SPECIFIED ALL DIMENSIONS ARE NOMINAL.
2. ALL SPECIFICATIONS ARE SUBJECT TO CHANGE WITHOUT NOTICE AT ANY TIME
3. DIMENSIONS ARE IN INCHES [mm].

DWG TITLE: PE-SR405TN

CAD FILE: 11/28/17

SCALE: N/A

SIZE: A

CN2245

CAGE CODE: 53919

PASTERNACK®
THE ENGINEER'S RF SOURCE
Pasternack Enterprises, Inc.
P.O. Box 16759 | Irvine | CA | 92623
Phone: (949) 261-1920 | **Fax:** (949) 261-7451
Website: www.pasternack.com | **E-Mail:** sales@pasternack.com

© 2020 Pasternack Enterprises All Rights Reserved