PASTERNACK®
www.pasternack.com

75 Ohm SMB Positive Snap Plug Connector Crimp/ Solder Attachment For RG179, RG187

TECHNICAL DATA SHEET PE44443

75 Ohm SMB Positive Snap Plug Connector Crimp/Solder Attachment For RG179, RG187

Configuration

Connector	SMB Positive Snap Plug
Connector Interface Type	RG179,RG187
Cable Attachment Method (Shield/Contact)	Crimp/Solder
Body Style	Straight

Electrical Specifications

Impedance, Ohms	75

Mechanical Specifications

Size

Length, in [mm]	1.082 [27.48]
Width/Dia., in [mm]	0.4 [10.16]
Weight, lbs [g]	0.019 [8.62]

Connector

Type	SMB Positive Snap Plug
Contact Material and Plating	Gold
Body Material and Plating	Brass, Nickel
Dielectric Type	PTFE

Compliance Certifications (visit www.Pasternack.com for current document)

RoHS Compliant	Yes

Plotted and Other Data

Notes:	Values at 25 °C, sea level

75 Ohm SMB Positive Snap Plug Connector Crimp/Solder Attachment For RG179, RG187 from Pasternack Enterprises has same day shipment for domestic and International orders. Our RF, microwave and fiber optic products maintain a 99% availability and are part of the broadest selection in the industry.

Click the following link (or enter part number in “SEARCH” on website) to obtain additional part information including price, inventory and certifications: 75 Ohm SMB Positive Snap Plug Connector Crimp/Solder Attachment For RG179, RG187 PE44443

URL: http://www.pasternack.com/smb-positive-snap-plug-standard-rg179-rg187-connector-pe44443-p.aspx

The information contained in this document is accurate to the best of our knowledge and representative of the part described herein. It may be necessary to make modifications to the part and/or the documentation of the part, in order to implement improvements. Pasternack reserves the right to make such changes as required. Unless otherwise stated, all specifications are nominal.

Pasternack Enterprises, Inc. • P.O. Box 16759, Irvine, CA 92623
Phone: (866) 727-8376 or (949) 261-1920 • **Fax:** (949) 261-7451
Sales@Pasternack.com • Techsupport@Pasternack.com

© 2013 Pasternack Enterprises All Rights Reserved

PE44443 CAD Drawing

75 Ohm SMB Positive Snap Plug Connector Crimp/Solder Attachment For RG179, RG187

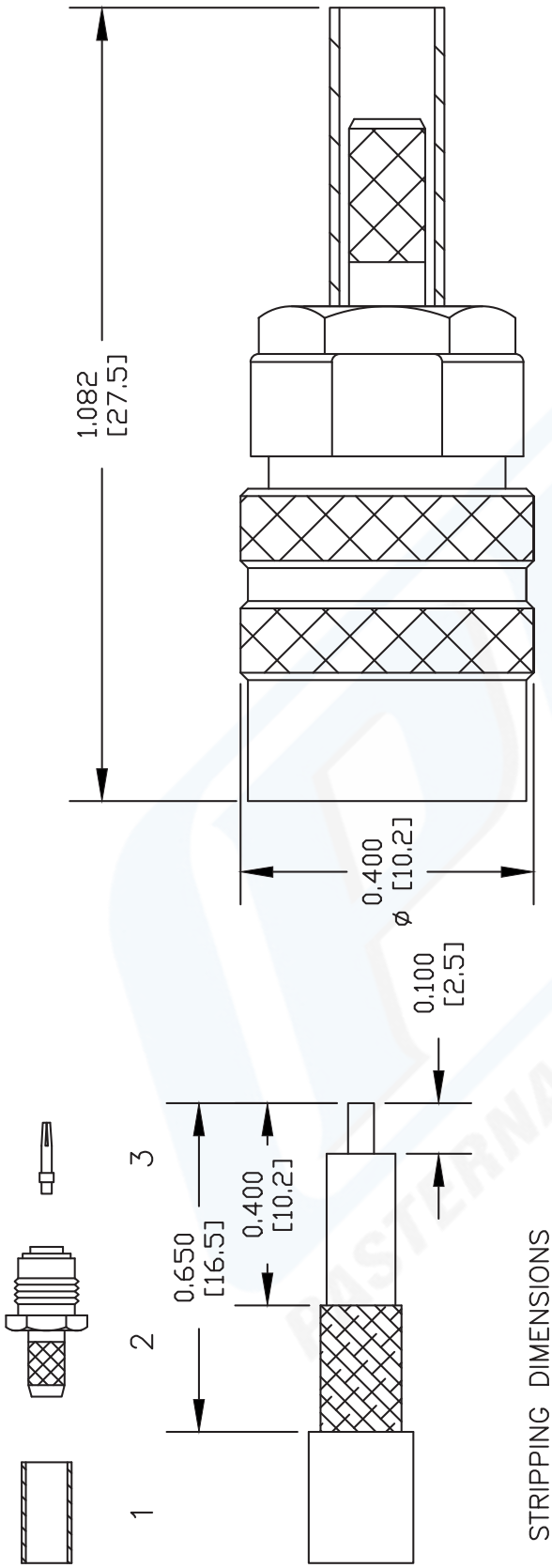

STRIPPING DIMENSIONS

ASSEMBLY PROCEDURES

1. STRIP CABLE AS SHOWN & SLIDE FERRULE (1) ONTO CABLE. TIN CENTER CONDUCTOR.
2. ADD CRIMP NUT (2) BY SLIDING EXTENSION BETWEEN BRAID & DIELECTRIC. SLIDE FERRULE (1) OVER BRAID & CRIMP.
3. SOLDER CONTACT (3) TO CENTER CONDUCTOR. SLIDE ASSEMBLY INTO BODY & TIGHTEN

CRIMP SIZE REQUIRED

CONTACT: SOLDER
FERRULE: .128" HEX CRIMP TOOL

NOTES:
1. UNLESS OTHERWISE SPECIFIED ALL DIMENSIONS ARE NOMINAL.
2. ALL SPECIFICATIONS ARE SUBJECT TO CHANGE WITHOUT NOTICE AT ANY TIME.
3. DIMENSIONS ARE IN INCHES [mm].
4. FITS MIL-C-17 AND EQUIVALENT CABLES.

DWG TITLE
PE44443

FSCM NO. 53919

CAD FILE 080504 | SCALE N/A | SIZE A | 127

PASTERNACK®
Pasternack Enterprises, Inc.
P.O. Box 16759 | Irvine | CA | 92623
Phone: (949) 261-1920 | **Fax:** (949) 261-7451
Website: www.pasternack.com | **E-Mail:** sales@pasternack.com

© 2013 Pasternack Enterprises All Rights Reserved

PASTERNACK®
THE ENGINEER'S RF SOURCE

75 Ohm TNC Female Bulkhead Mount Connector Clamp/ Solder Attachment for RG179, RG187, .480 inch D Hole

Configuration

- TNC Female Connector
- MIL-STD-348
- 75 Ohms
- Straight Body Geometry
- RG179, RG187 Interface Type
- Clamp/Solder Attachment
- Bulkhead

Features

- Silver Plated Contact
- Contact plating according to QQ-S-365

Applications

- General Purpose Test
- Rack and Panel Mount Applications
- Custom Cable Assemblies

Description

Pasternack's PE44176 75 ohm TNC female bulkhead connector with clamp/solder attachment for RG179 and RG187 (.480 inch D hole) is part of our full line of RF components available for same-day shipping. This TNC bulkhead connector allows designers to create external connections on their product enclosures, and can be used in a variety of other rack mount and panel mount applications.

Our 75 ohm TNC female bulkhead connector PE44176 datasheet specifications and drawing with dimensions are shown below in this PDF. Pasternack's broad catalog of RF, microwave and millimeter wave connectors allows designers to configure and customize their signal connections however they like. Whether the need is to provide an I/O for a board design, or simply create a custom cable assembly configuration, Pasternack has the right connector for the job. Pasternack can also expertly build your custom cable assemblies for you and ship same-day.

Mechanical Specifications

Size

Length	1.13 in [28.7 mm]
Width/Dia.	0.688 in [17.48 mm]
Weight	0.055 lbs [24.95 g]

Material Specifications

Description	Material	Plating
Contact		Silver QQ-S-365
Body	Brass	Nickel QQ-N-290

Click the following link (or enter part number in "SEARCH" on website) to obtain additional part information including price, inventory and certifications: 75 Ohm TNC Female Bulkhead Mount Connector Clamp/Solder Attachment for RG179, RG187, .480 inch D Hole PE44176

Pasternack Enterprises, Inc. • P.O. Box 16759, Irvine, CA 92623
Phone: (866) 727-8376 or (949) 261-1920 • **Fax:** (949) 261-7451
Sales@Pasternack.com • Techsupport@Pasternack.com

© 2016 Pasternack Enterprises All Rights Reserved

75 Ohm TNC Female Bulkhead Mount Connector Clamp/ Solder Attachment for RG179, RG187, .480 inch D Hole

Compliance Certifications (see product page for current document)

Plotted and Other Data

Notes:

75 Ohm TNC Female Bulkhead Mount Connector Clamp/Solder Attachment for RG179, RG187, .480 inch D Hole from Pasternack Enterprises has same day shipment for domestic and International orders. Our RF, microwave and millimeter wave products maintain a 99% availability and are part of the broadest selection in the industry.

Click the following link (or enter part number in "SEARCH" on website) to obtain additional part information including price, inventory and certifications: 75 Ohm TNC Female Bulkhead Mount Connector Clamp/Solder Attachment for RG179, RG187, .480 inch D Hole PE44176

URL: https://www.pasternack.com/tnc-female-standard-rg179-rg187-connector-pe44176-p.aspx

The information contained in this document is accurate to the best of our knowledge and representative of the part described herein. It may be necessary to make modifications to the part and/or the documentation of the part, in order to implement improvements. Pasternack reserves the right to make such changes as required. Unless otherwise stated, all specifications are nominal. Pasternack does not make any representation or warranty regarding the suitability of the part described herein for any particular purpose, and Pasternack does not assume any liability arising out of the use of any part or documentation.

Pasternack Enterprises, Inc. • P.O. Box 16759, Irvine, CA 92623
Phone: (866) 727-8376 or (949) 261-1920 • **Fax:** (949) 261-7451
Sales@Pasternack.com • Techsupport@Pasternack.com

© 2016 Pasternack Enterprises All Rights Reserved

PE44176 CAD Drawing

75 Ohm TNC Female Bulkhead Mount Connector Clamp/Solder Attachment for RG179, RG187, .480 inch D Hole

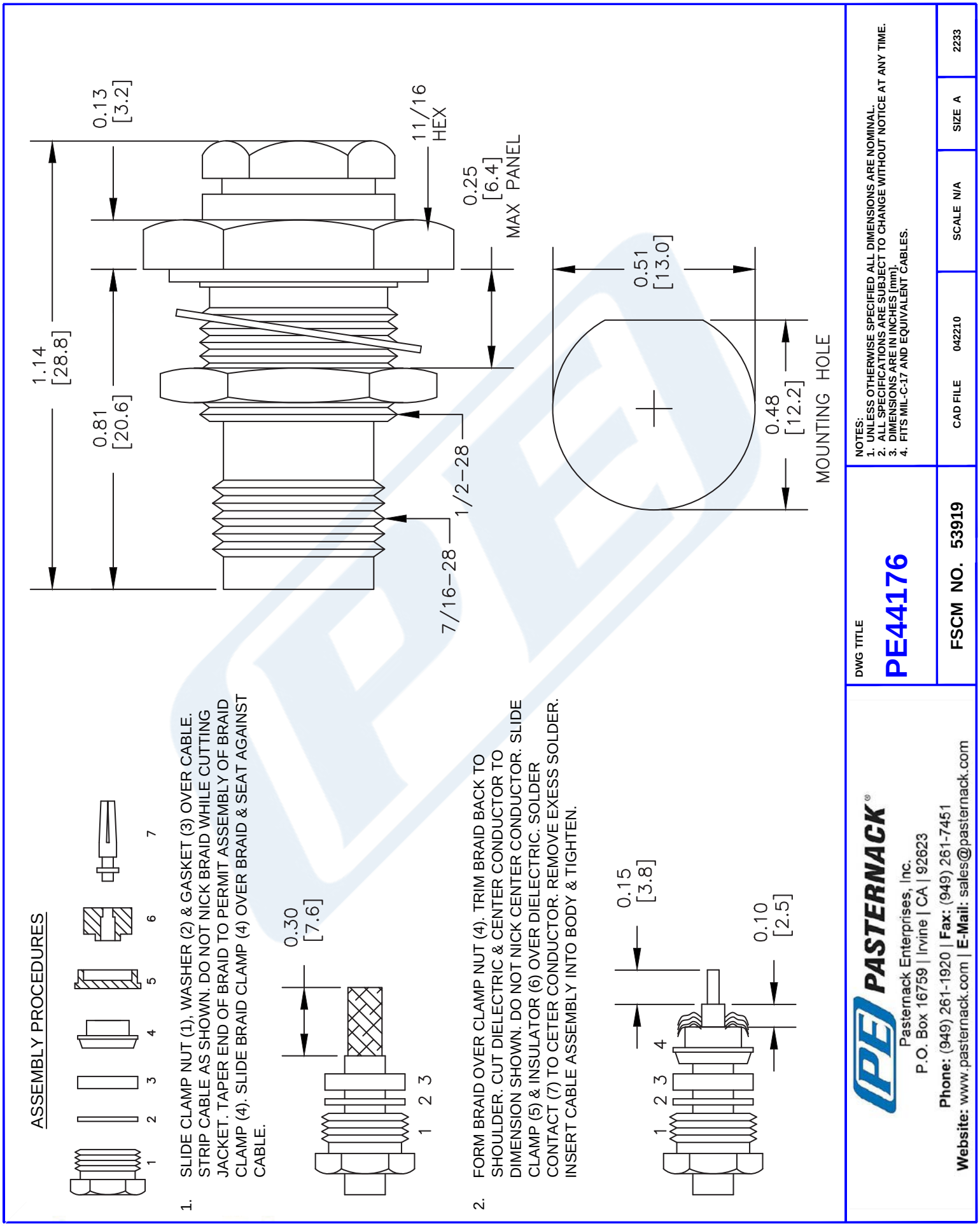

© 2016 Pasternack Enterprises All Rights Reserved

75 Ohm Flexible RG179 Coax Cable Single Shielded with Tan FEP Jacket

Configuration

- Flexible Cable
- 1 Shield(s)

Electrical Specifications

Description	Minimum	Typical	Maximum	Units
Frequency Range	DC		3	GHz
Impedance		75		Ohms
Velocity of Propagation		70		%
Operating Voltage (AC)			900	Vrms
Nominal Capacitance		19.4 [63.65]		pF/ft [pF/m]

Performance by Frequency Band

Description	F1	F2	F3	F4	F5	Units
Frequency	100	400	1,000			MHz
Attenuation, Typ	9.06	18.4	30			dB/100ft
	29.72	60.37	98.43			dB/100m

Mechanical Specifications

Diameter	0.1 in [2.54 mm]
Weight	0.01 lbs/ft [0.01 Kg/m]
Min. Bend Radius (Repeated)	0.4 in [10.16 mm]

Construction Specifications

Description	Material and Plating	Diameter
Inner Conductor	Copper Clad Steel, Silver, 7 Strands	0.012 in [0.3 mm]
Conductor Type	Stranded	
Dielectric	PTFE	0.063 in [1.6 mm]
First Shield	Silver Plated Copper Braid	0.08 in [2.03 mm]

Click the following link (or enter part number in “SEARCH” on website) to obtain additional part information including price, inventory and certifications: 75 Ohm Flexible RG179 Coax Cable Single Shielded with Tan FEP Jacket RG179B/U

Pasternack Enterprises, Inc. • P.O. Box 16759, Irvine, CA 92623
Phone: (866) 727-8376 or (949) 261-1920 • **Fax:** (949) 261-7451
Sales@Pasternack.com • Techsupport@Pasternack.com

© 2017 Pasternack Enterprises All Rights Reserved

75 Ohm Flexible RG179 Coax Cable Single Shielded with Tan FEP Jacket

Jacket	FEP, Tan	0.1 in [2.54 mm]

Environmental Specifications

Temperature

Operating Range	-55 to +200 deg C

Compliance Certifications (see product page for current document)

Plotted and Other Data

Notes:

75 Ohm Flexible RG179 Coax Cable Single Shielded with Tan FEP Jacket from Pasternack Enterprises has same day shipment for domestic and International orders. Our RF, microwave and millimeter wave products maintain a 99.4% availability and are part of the broadest selection in the industry.

Click the following link (or enter part number in "SEARCH" on website) to obtain additional part information including price, inventory and certifications: 75 Ohm Flexible RG179 Coax Cable Single Shielded with Tan FEP Jacket RG179B/U

URL: https://www.pasternack.com/flexible-0.100-rg179-75-ohm-coax-cable-fep-jacket-rg179b-u-p.aspx

The information contained in this document is accurate to the best of our knowledge and representative of the part described herein. It may be necessary to make modifications to the part and/or the documentation of the part, in order to implement improvements. Pasternack reserves the right to make such changes as required. Unless otherwise stated, all specifications are nominal. Pasternack does not make any representation or warranty regarding the suitability of the part described herein for any particular purpose, and Pasternack does not assume any liability arising out of the use of any part or documentation.

Pasternack Enterprises, Inc. • P.O. Box 16759, Irvine, CA 92623
Phone: (866) 727-8376 or (949) 261-1920 • **Fax:** (949) 261-7451
Sales@Pasternack.com • Techsupport@Pasternack.com

© 2017 Pasternack Enterprises All Rights Reserved

RG179B/U CAD Drawing

75 Ohm Flexible RG179 Coax Cable Single Shielded with Tan FEP Jacket

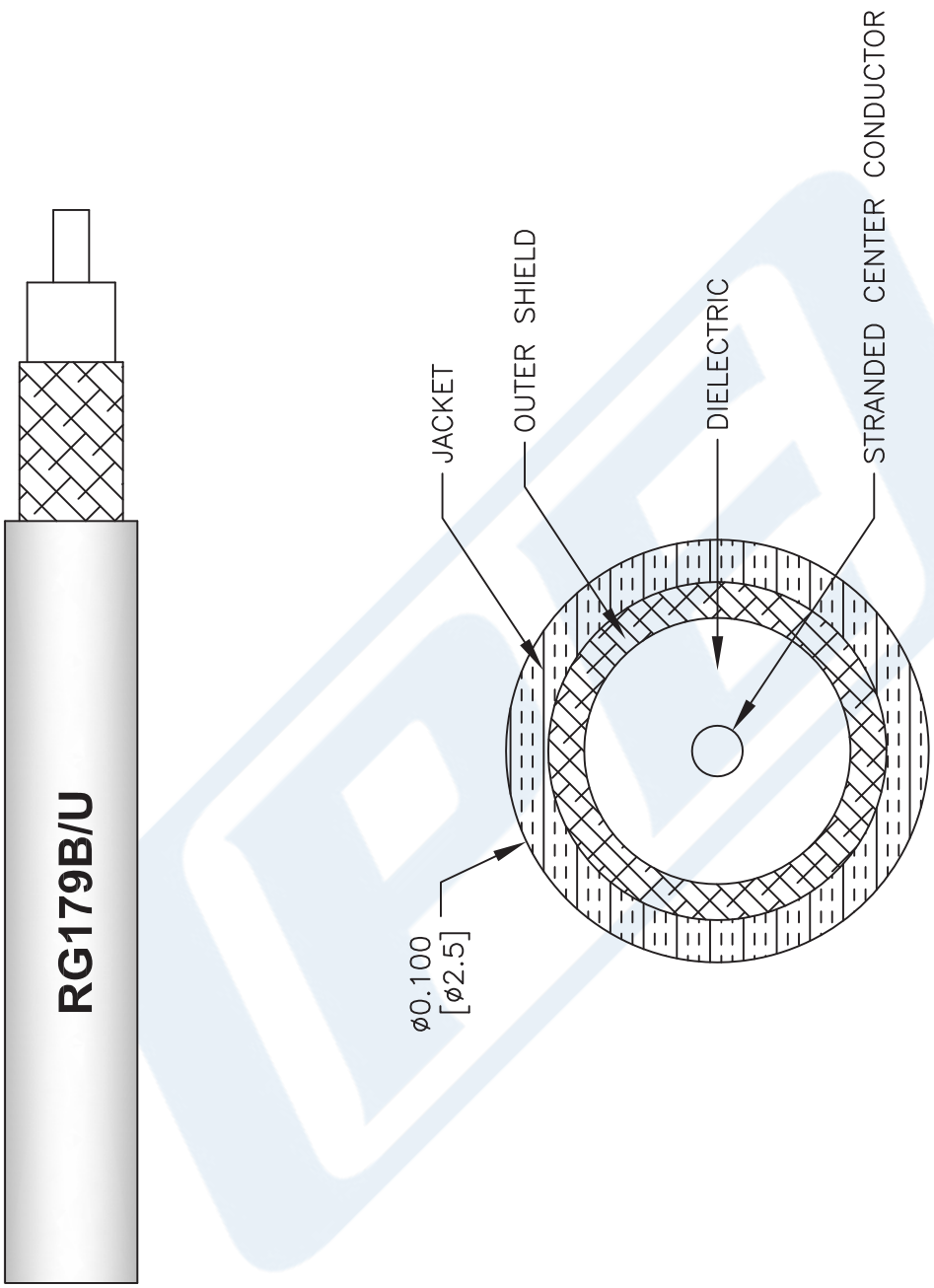

NOTES:
1. UNLESS OTHERWISE SPECIFIED ALL DIMENSIONS ARE NOMINAL.
2. ALL SPECIFICATIONS ARE SUBJECT TO CHANGE WITHOUT NOTICE AT ANY TIME.
3. DIMENSIONS ARE IN INCHES [mm].

DWG TITLE
RG179B/U

FSCM NO. 53919

CAD FILE 111716 | SCALE N/A | SIZE A | 41742

PASTERNACK®
THE ENGINEER'S RF SOURCE
Pasternack Enterprises, Inc.
P.O. Box 16759 | Irvine | CA | 92623
Phone: (949) 261-1920 | **Fax:** (949) 261-7451
Website: www.pasternack.com | **E-Mail:** sales@pasternack.com

© 2017 Pasternack Enterprises All Rights Reserved