NMO Mount Connector Crimp/Solder Attachment for PE-C195, PE-P195, RG58, RG55, RG141, RG142, RG223, RG400, RG303, LMR-195

RF Connectors Technical Data Sheet PE51021

Configuration

- NMO Mount Sexless Connector
- 50 Ohms
- Straight Body Geometry
- PE-C195, PE-P195, RG58, RG55, RG141, RG142, RG223, RG400, RG303, LMR-195 Interface Type
- Crimp/Solder Attachment

Applications

- General Purpose Test
- Custom Cable Assemblies

Description

Pasternack's PE51021 NMO Mount connector with crimp/solder attachment for PE-C195, PE-P195, RG58, RG55, RG141, RG142, RG223, RG400, RG303 and LMR-195 is part of our full line of RF components available for same-day shipping.

Our NMO Mount connector PE51021 datasheet specifications and drawing with dimensions are shown below in this PDF. Pasternack's broad catalog of RF, microwave and millimeter wave connectors allows designers to configure and customize their signal connections however they like. Whether the need is to provide an I/O for a board design, or simply create a custom cable assembly configuration, Pasternack has the right connector for the job. Pasternack can also expertly build your custom cable assemblies for you and ship same-day.

Mechanical Specifications

Weight	0.07 lbs [31.75 g]

Compliance Certifications (see product page for current document)

Plotted and Other Data

Notes:

NMO Mount Connector Crimp/Solder Attachment for PE-C195, PE-P195, RG58, RG55, RG141, RG142, RG223, RG400, RG303, LMR-195 from Pasternack Enterprises has same day shipment for domestic and International orders. Our RF, microwave and millimeter wave products maintain a 99% availability and are part of the broadest selection in the industry.

Click the following link (or enter part number in "SEARCH" on website) to obtain additional part information including price, inventory and certifications: NMO Mount Connector Crimp/Solder Attachment for PE-C195, PE-P195, RG58, RG55, RG141, RG142, RG223, RG400, RG303, LMR-195 PE51021

URL: https://www.pasternack.com/nmo-mount-pe-c195-connector-pe51021-p.aspx

The information contained in this document is accurate to the best of our knowledge and representative of the part described herein. It may be necessary to make modifications to the part and/or the documentation of the part, in order to implement improvements. Pasternack reserves the right to make such changes as required. Unless otherwise stated, all specifications are nominal. Pasternack does not make any representation or warranty regarding the suitability of the part described herein for any particular purpose, and Pasternack does not assume any liability arising out of the use of any part or documentation.

Pasternack Enterprises, Inc. • P.O. Box 16759, Irvine, CA 92623
Phone: (866) 727-8376 or (949) 261-1920 • **Fax:** (949) 261-7451
Sales@Pasternack.com • Techsupport@Pasternack.com

© 2016 Pasternack Enterprises All Rights Reserved

PE51021 CAD Drawing

NMO Mount Connector Crimp/Solder Attachment for PE-C195, PE-P195, RG58, RG55, RG141, RG142, RG223, RG400, RG303, LMR-195

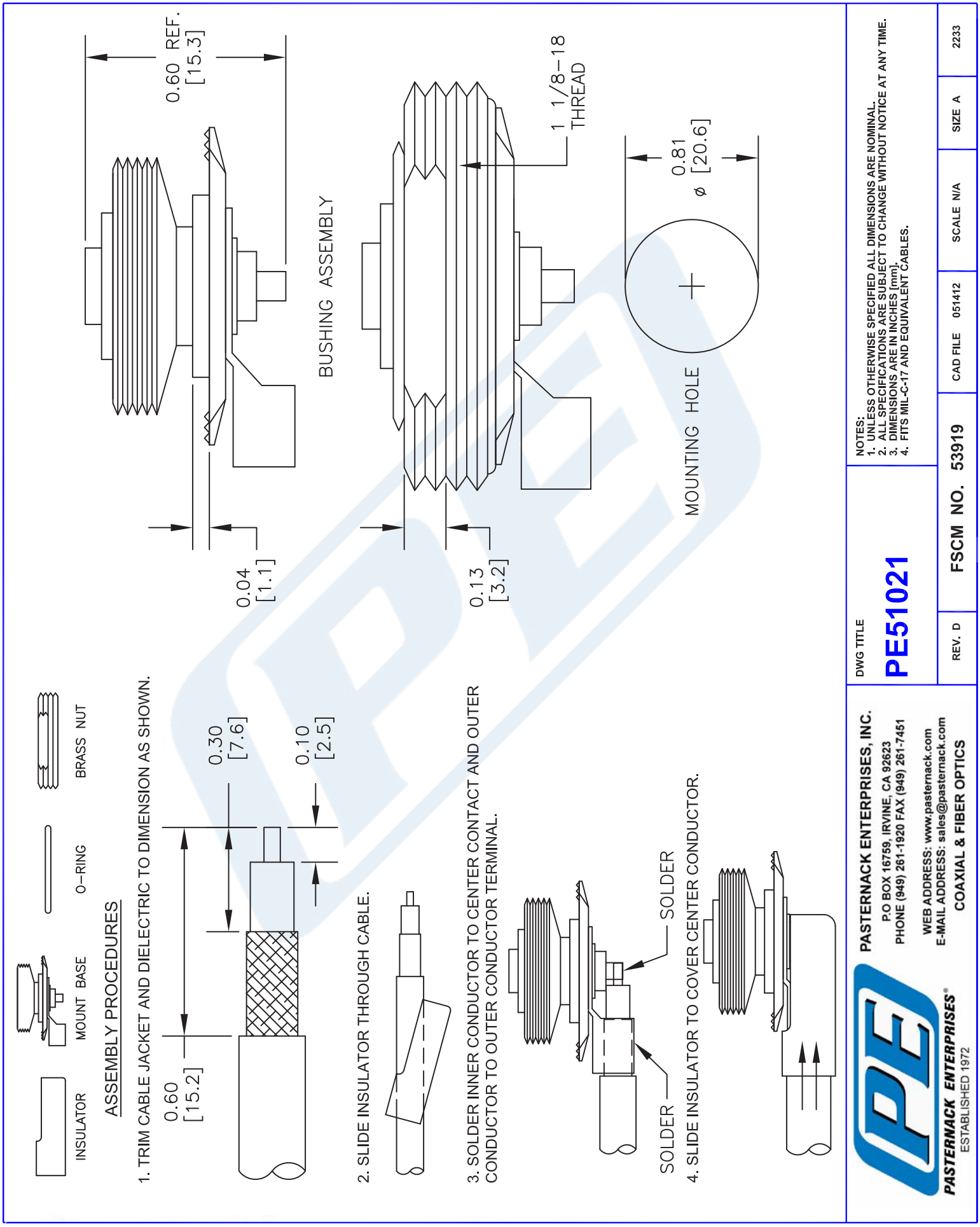

© 2016 Pasternack Enterprises All Rights Reserved

PASTERNACK®
THE ENGINEER'S RF SOURCE

UHF Male Connector Crimp/Solder Attachment for RG58, RG303, RG141, PE-C195, PE-P195, LMR-195, 0.195 inch

Configuration

- UHF Male Connector
- 50 Ohms
- Straight Body Geometry
- RG58, RG303, RG141, PE-C195, PE-P195, LMR-195, 0.195 inch Interface Type
- Crimp/Solder Attachment

Features

- Max. Operating Frequency 300 MHz
- Good VSWR of 1.3:1
- Gold Plated Brass Contact
- 30 µin minimum contact plating

Applications

- General Purpose Test
- Custom Cable Assemblies

Description

Pasternack's PE4069 UHF male connector with crimp/solder attachment for RG58, RG303, RG141, PE-C195, PE-P195, LMR-195 and 0.195 inch is part of our full line of RF components available for same-day shipping. Our UHF male connector operates up to a maximum frequency of 300 MHz and offers good VSWR of 1.3:1.

Our UHF male connector PE4069 datasheet specifications and drawing with dimensions are shown below in this PDF. Pasternack's broad catalog of RF, microwave and millimeter wave connectors allows designers to configure and customize their signal connections however they like. Whether the need is to provide an I/O for a board design, or simply create a custom cable assembly configuration, Pasternack has the right connector for the job. Pasternack can also expertly build your custom cable assemblies for you and ship same-day.

Electrical Specifications

Description	Minimum	Typical	Maximum	Units
Frequency Range	DC		300	MHz
VSWR			1.3:1	
Operating Voltage (AC)			500	Vrms

Mechanical Specifications

Size

Length	1.295 in [32.89 mm]
Width/Dia.	0.7 in [17.78 mm]
Weight	0.038 lbs [17.24 g]

Click the following link (or enter part number in "SEARCH" on website) to obtain additional part information including price, inventory and certifications: UHF Male Connector Crimp/Solder Attachment for RG58, RG303, RG141, PE-C195, PE-P195, LMR-195, 0.195 inch PE4069

Pasternack Enterprises, Inc. • P.O. Box 16759, Irvine, CA 92623
Phone: (866) 727-8376 or (949) 261-1920 • **Fax:** (949) 261-7451
Sales@Pasternack.com • Techsupport@Pasternack.com

© 2016 Pasternack Enterprises All Rights Reserved

UHF Male Connector Crimp/Solder Attachment for RG58, RG303, RG141, PE-C195, PE-P195, LMR-195, 0.195 inch

Material Specifications

Description	Material	Plating
Contact	Brass	Gold 30 µin minimum
Insulation	PTFE	
Body	Brass	Nickel 100 µin minimum
Coupling Nut	Brass	Nickel 100 µin minimum

Environmental Specifications

Temperature

Operating Range -55 to +85 deg C

Compliance Certifications (see product page for current document)

Plotted and Other Data

Notes:

UHF Male Connector Crimp/Solder Attachment for RG58, RG303, RG141, PE-C195, PE-P195, LMR-195, 0.195 inch from Pasternack Enterprises has same day shipment for domestic and International orders. Our RF, microwave and millimeter wave products maintain a 99% availability and are part of the broadest selection in the industry.

Click the following link (or enter part number in "SEARCH" on website) to obtain additional part information including price, inventory and certifications: UHF Male Connector Crimp/Solder Attachment for RG58, RG303, RG141, PE-C195, PE-P195, LMR-195, 0.195 inch PE4069

URL: https://www.pasternack.com/uhf-male-standard-rg58-connector-pe4069-p.aspx

The information contained in this document is accurate to the best of our knowledge and representative of the part described herein. It may be necessary to make modifications to the part and/or the documentation of the part, in order to implement improvements. Pasternack reserves the right to make such changes as required. Unless otherwise stated, all specifications are nominal. Pasternack does not make any representation or warranty regarding the suitability of the part described herein for any particular purpose, and Pasternack does not assume any liability arising out of the use of any part or documentation.

Pasternack Enterprises, Inc. • P.O. Box 16759, Irvine, CA 92623
Phone: (866) 727-8376 or (949) 261-1920 • **Fax:** (949) 261-7451
Sales@Pasternack.com • Techsupport@Pasternack.com

© 2016 Pasternack Enterprises All Rights Reserved

PE4069 CAD Drawing

UHF Male Connector Crimp/Solder Attachment for RG58, RG303, RG141, PE-C195, PE-P195, LMR-195, 0.195 inch

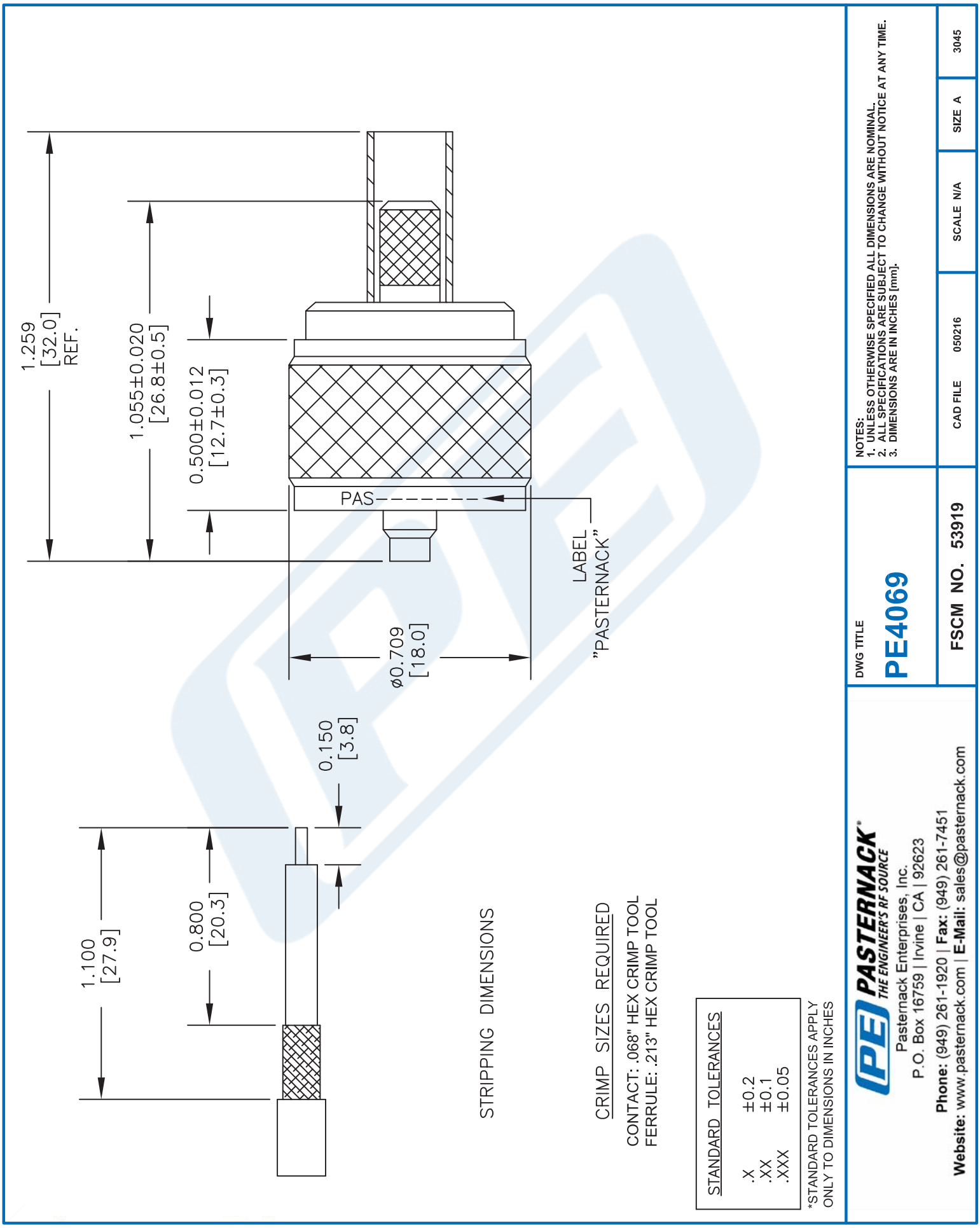

© 2016 Pasternack Enterprises All Rights Reserved

LMR-LW195 Light weight version of the 195 series Low Loss Coax

RF Cables
Technical Data Sheet

LMR-LW195

Times Microwave Systems Coax Cable Specification

Configuration

- Low Loss, Outdoor Flexible Cable
- 2 Shield(s)

Features

- Light Weight Coax with Aluminum Shielding
- Max Operating Frequency of 8 GHz
- Phase Velocity 80% VoP
- Max Operating Temperature +85°C
- PE Jacket
- Min Install Bend Radius of 0.5 inches

Applications

- Antenna Installs
- RF Test Systems
- General Purpose RF Interconnect
- Laboratory Applications

Description

LMR-LW195 Light weight version of the 195 series Low Loss Coax from Times Microwave is part of the large product offering by Pasternack of radio frequency coaxial cable types specifically stocked to be ready for same-day shipment. Pasternack LMR-LW195 coax cable is manufactured in a flexible design and has a 50 Ohm impedance. This low loss and light weight flexible 50 Ohm coax cable LMR-LW195 is constructed with a 0.195 inch diameter and Black PE jacket.

LMR-LW195 flexible 50 Ohm coax cable with PE jacket is rated for a 8 GHz maximum operating frequency. This 50 Ohm 0.195 inch diameter and low loss flexible coax cable is built with an aluminum double shield count and RF shielding of 90 dB. Times Microwave LMR-LW195 PE coax is constructed with Foam PE dielectric and a maximum operating temperature of 85 degrees C. Pasternack's offering of LMR-LW195 coax cable provides specs for this wire on its RF coax cable LMR-LW195 datasheet.

LMR-LW195 cable is part of more than one million RF, microwave parts in stock at Pasternack. This Times Microwave low loss and light weight LMR-LW195 coax cable is ready to buy and can be shipped worldwide. Pasternack also maintains a wide selection of other radio frequency coaxial cable types that ship same-day from our warehouse as with the rest of our other RF/microwave components.

* LMR™ is a trademark of Times Microwave Systems.

Electrical Specifications

Description	Minimum	Typical	Maximum	Units
Frequency Range	DC		8	GHz
Impedance		50		Ohms
Velocity of Propagation		80		%
Time Delay		1.27 [4.17]		ns/ft [ns/m]
Shielding Effectiveness	90			dB
Dielectric Withstanding Voltage (DC)			1,000	Vdc
Jacket Spark			3,000	Vrms

Click the following link (or enter part number in "SEARCH" on website) to obtain additional part information including price, inventory and certifications: LMR-LW195 Light weight version of the 195 series Low Loss Coax LMR-LW195

Pasternack Enterprises, Inc. • P.O. Box 16759, Irvine, CA 92623
Phone: (866) 727-8376 or (949) 261-1920 • **Fax:** (949) 261-7451
Sales@Pasternack.com • Techsupport@Pasternack.com

© 2020 Pasternack Enterprises All Rights Reserved

LMR-LW195 Light weight version of the 195 series Low Loss Coax

Inner Conductor DC Resistance		7.6	Ohms/1000ft
Outer Conductor DC Resistance		18.1	Ohms/1000ft
Nominal Capacitance	25.4 [83.33]		pF/ft [pF/m]
Nominal Inductance	0.064 [0.21]		uH/ft [uH/m]
Input Power (Peak)		2.5	kWatts

Performance by Frequency Band

Description	F1	F2	F3	F4	F5	Units
Frequency	0.05	0.15	0.45	0.9	1.5	GHz
Attenuation, Typ	2.5	4.4	7.8	11.1	14.5	dB/100ft
	8.2	14.44	25.59	36.42	47.57	dB/100m
Input Power (CW), Max	680	390	220	160	120	Watts

Description	F6	F7	F8	F9	F10	Units
Frequency	1.8	2	2.5	5.8	8	GHz
Attenuation, Typ	16	16.9	19	29.9	35.7	dB/100ft
	52.49	55.45	62.34	98.1	117.13	dB/100m
Input Power (CW), Max	110	100	90	60	40	Watts

Mechanical Specifications

Diameter	0.195 in [4.95 mm}
Weight	0.015 lbs/ft [0.02 kg/m]
Min. Bend Radius (Installation)	0.5 in [12.7 mm]
Min. Bend Radius (Repeated)	2 in [50.8 mm]
Bending Moment	0.2 lbs-ft [0.27 N-m]
Tensile Strength	40 lbs [18.14 kg]
Flat Plate Crush	15 lbs/in [0.27 kg/mm]

Construction Specifications

Description	Material and Plating	Diameter
Inner Conductor	Copper, 1 Strand	0.037 in [0.94 mm]
Conductor Type	Solid	

Click the following link (or enter part number in “SEARCH” on website) to obtain additional part information including price, inventory and certifications: LMR-LW195 Light weight version of the 195 series Low Loss Coax LMR-LW195

Pasternack Enterprises, Inc. • P.O. Box 16759, Irvine, CA 92623
Phone: (866) 727-8376 or (949) 261-1920 • **Fax:** (949) 261-7451
Sales@Pasternack.com • Techsupport@Pasternack.com

© 2020 Pasternack Enterprises All Rights Reserved

LMR-LW195 Light weight version of the 195 series Low Loss Coax

Dielectric	Foam PE	0.11 in [2.79 mm]
First Shield	Aluminum Tape	[ ]
Second Shield	Aluminium	[ ]
Jacket	PE, Black	0.195 in [4.95 mm]

Environmental Specifications

Temperature

Operating Range	-40 to +85 deg C
Installation Range	-40 to +85 deg C
Storage Range	-70 to +85 deg C

Compliance Certifications (see product page for current document)

Plotted and Other Data

Notes:

LMR-LW195 Light weight version of the 195 series Low Loss Coax from Pasternack Enterprises has same day shipment for domestic and International orders. Our RF, microwave and millimeter wave products maintain a 99.4% availability and are part of the broadest selection in the industry.

Click the following link (or enter part number in “SEARCH” on website) to obtain additional part information including price, inventory and certifications: LMR-LW195 Light weight version of the 195 series Low Loss Coax LMR-LW195

URL: https://www.pasternack.com/low-loss-flexible-lmr-lw195-pe-jacket-aluminum-tape-over-aluminium-outer-conductor-double-shielded-lmr-lw195-p.aspx

The information contained in this document is accurate to the best of our knowledge and representative of the part described herein. It may be necessary to make modifications to the part and/or the documentation of the part, in order to implement improvements. Pasternack reserves the right to make such changes as required. Unless otherwise stated, all specifications are nominal. Pasternack does not make any representation or warranty regarding the suitability of the part described herein for any particular purpose, and Pasternack does not assume any liability arising out of the use of any part or documentation.

Pasternack Enterprises, Inc. • P.O. Box 16759, Irvine, CA 92623
Phone: (866) 727-8376 or (949) 261-1920 • **Fax:** (949) 261-7451
Sales@Pasternack.com • Techsupport@Pasternack.com

© 2020 Pasternack Enterprises All Rights Reserved

LMR-LW195 CAD Drawing

LMR-LW195 Light weight version of the 195 series Low Loss Coax

REVISIONS

REV.	DESCRIPTION	DATE	APPROVED
A	INITIAL RELEASE	06-04-2021	SELLIS

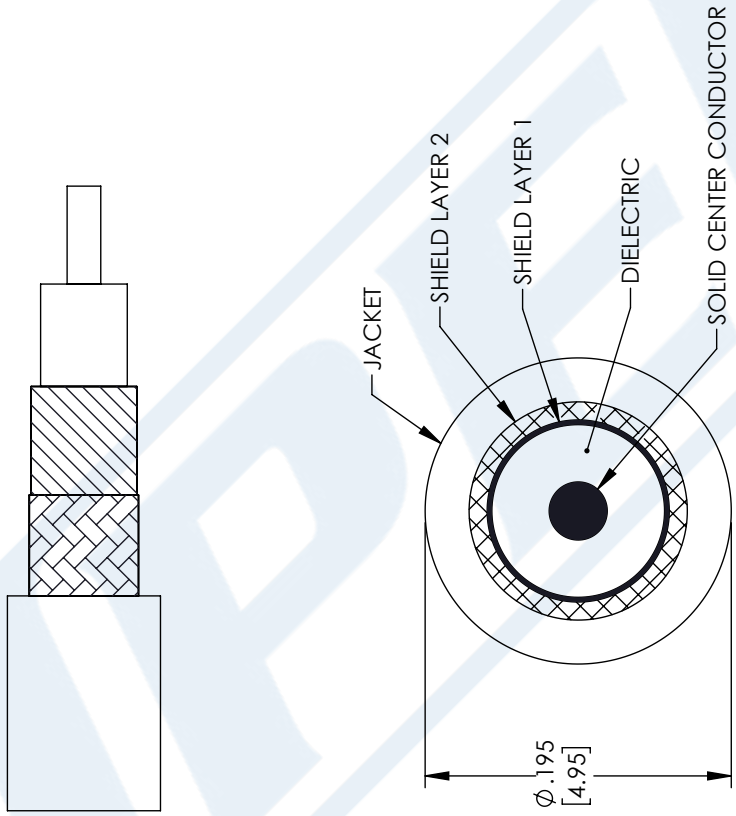

UNLESS OTHERWISE SPECIFIED
LEADING DIMENSIONS ARE INCHES
DIMENSIONS IN [ ] ARE MILLIMETERS

TOLERANCES:

.X = ± .2 [5.08] | FRACTIONS
.XX = ± .02 [.51] | ± 1/32
.XXX = ± .005 [.13] | ANGLES ± 1°

CABLE LENGTH (L) TOLERANCES:

L ≤ 12 [305] = +1 [25] / -0
12 [305] < L ≤ 60 [1524] = +2 [51] / -0
60 [1524] < L ≤ 120 [3048] = +4 [102] / -0
120 [3048] < L ≤ 300 [7620] = +6 [152] / -0
300 [7620] < L = +5%L / -0

ALL DIMENSIONS SHOWN
ARE FOR REFERENCE ONLY.

PASTERNACK
an INFINITE brand
Pasternack Enterprises, Inc.
P.O.Box 16759, Irvine, CA 92623.
Phone: 1.949.261.1920 | 1.866.727.8376
Fax: 1.949.261.7451
Website: www.pasternack.com
E-mail: sales@pasternack.com

THIRD-ANGLE PROJECTION

THE INFORMATION AND DESIGN IN THIS DOCUMENT IS THE PROPERTY OF PASTERNACK CORPORATION ALL RIGHTS RESERVED.

SIZE	CAGE CODE	DRAWN BY	ITEM NO.	REV
A	53919	MVEERAPPAN	LMR-LW195	A

SHEET 1 OF 1
SCALE N/A

THESE COMMODITIES, TECHNOLOGY OR SOFTWARE WERE EXPORTED FROM THE UNITED STATES IN ACCORDANCE WITH THE EXPORT ADMINISTRATION REGULATIONS. DIVERSION CONTRARY TO U.S. LAW PROHIBITED.

T-Rev.D