PASTERNACK®
THE ENGINEER'S RF SOURCE

4.3-10 Male Connector Crimp/Non-Solder Contact Attachment for LMR-240

RF Connectors
Technical Data Sheet

TIMES MICROWAVE SYSTEMS

EZ-240-4310M-X

Times Microwave Systems Connector Specification

Configuration

- 4.3-10 Male Connector
- 50 Ohms
- Straight Body Geometry
- LMR-240 Interface Type
- Crimp/Non-Solder Contact Attachment

Features

- Max. Operating Frequency 6 GHz
- Good VSWR of 1.3:1
- Gold Plated Beryllium Copper Contact

Applications

- General Purpose Test
- Custom Cable Assemblies
- Mobile Communications Systems
- Base Stations
- Distributed Antenna Systems (DAS)
- Small Cells
- Feeder Cables

Description

The Times Microwave EZ-240-4310M-X 4.3-10 male connector with crimp/non-solder attachment for LMR-240 is part of our full line of RF components available for same-day shipping. This 4.3-10 male connector operates up to a maximum frequency of 6 GHz and offers good VSWR of 1.3:1.

Our datasheet specifications and drawing with dimensions for Times Microwave's 4.3-10 male connector TC-240-4310M-X are shown below in this PDF. Pasternack's broad catalog of RF, microwave and millimeter wave connectors allows designers to configure and customize their signal connections however they like. Whether the need is to provide an I/O for a board design, or simply create a custom cable assembly configuration, Pasternack has the right connector for the job. Pasternack can also expertly build your custom cable assemblies for you and ship same-day.

Electrical Specifications

Description	Minimum	Typical	Maximum	Units
Frequency Range	DC		6	GHz
VSWR			1.3:1	
Insulation Resistance	10,000			MOhms

Electrical Specification Notes:
Insertion Loss = 0.1 x SQRT(FGHz)

Mechanical Specifications

Mating Cycles	500 Cycles

Click the following link (or enter part number in "SEARCH" on website) to obtain additional part information including price, inventory and certifications: 4.3-10 Male Connector Crimp/Non-Solder Contact Attachment for LMR-240 EZ-240-4310M-X

Pasternack Enterprises, Inc. • P.O. Box 16759, Irvine, CA 92623
Phone: (866) 727-8376 or (949) 261-1920 • **Fax:** (949) 261-7451
Sales@Pasternack.com • Techsupport@Pasternack.com

© 2018 Pasternack Enterprises All Rights Reserved

4.3-10 Male Connector Crimp/Non-Solder Contact Attachment for LMR-240

Material Specifications

Description	Material	Plating
Contact	Beryllium Copper	Gold
Insulation	PTFE	
Body	Brass	Tri-Metal
Coupling Nut	Brass	Tri-Metal
Gasket	Silicone	
Crimp Sleeve	Brass	Tri-Metal

Environmental Specifications

Temperature

Operating Range	-40 to +125 deg C
Shock	MIL-STD 202G, Meth. 204, Cond. B
Vibration	MIL-STD 202G, Meth. 213, Cond. I
Thermal Shock	MIL-STD 202G, Meth. 107, Cond. B

Compliance Certifications (see product page for current document)

Plotted and Other Data

Notes:

Click the following link (or enter part number in "SEARCH" on website) to obtain additional part information including price, inventory and certifications: 4.3-10 Male Connector Crimp/Non-Solder Contact Attachment for LMR-240 EZ-240-4310M-X

Pasternack Enterprises, Inc. • P.O. Box 16759, Irvine, CA 92623
Phone: (866) 727-8376 or (949) 261-1920 • **Fax:** (949) 261-7451
Sales@Pasternack.com • Techsupport@Pasternack.com

© 2018 Pasternack Enterprises All Rights Reserved

4.3-10 Male Connector Crimp/Non-Solder Contact Attachment for LMR-240

Assembly Instruction

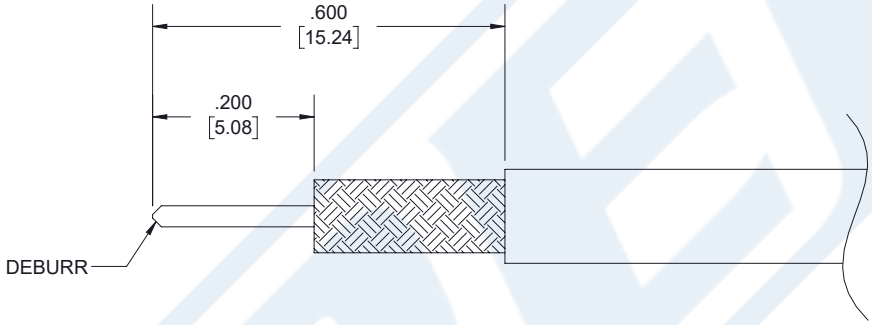

ASSEMBLY PROCEDURES

1. STRIP CABLE TO THE DIMENSIONS SHOWN, CHAMFER CENTER CONDUCTOR AND DEBURR CABLE.
2. SLIDE FERRULE OVER CABLE. INSTALL CABLE INTO BODY OF CONNECTOR UNTIL IT SEATS IN PLACE.
3. SLIDE FERRULE FORWARD AND AGAINST SHOULDER OF CONNECTOR AND CRIMP.

CRIMP SIZE REQUIRED

- FERRULE: .255" [6.48] HEX CRIMP TOOL.

Click the following link (or enter part number in "SEARCH" on website) to obtain additional part information including price, inventory and certifications: 4.3-10 Male Connector Crimp/Non-Solder Contact Attachment for LMR-240 EZ-240-4310M-X

Pasternack Enterprises, Inc. • P.O. Box 16759, Irvine, CA 92623
Phone: (866) 727-8376 or (949) 261-1920 • **Fax:** (949) 261-7451
Sales@Pasternack.com • Techsupport@Pasternack.com

© 2018 Pasternack Enterprises All Rights Reserved

4.3-10 Male Connector Crimp/Non-Solder Contact Attachment for LMR-240

RF Connectors
Technical Data Sheet

EZ-240-4310M-X

4.3-10 Male Connector Crimp/Non-Solder Contact Attachment for LMR-240 from Pasternack Enterprises has same day shipment for domestic and International orders. Our RF, microwave and millimeter wave products maintain a 99.4% availability and are part of the broadest selection in the industry.

Click the following link (or enter part number in “SEARCH” on website) to obtain additional part information including price, inventory and certifications: 4.3-10 Male Connector Crimp/Non-Solder Contact Attachment for LMR-240 EZ-240-4310M-X

URL: https://www.pasternack.com/4.3-10-male-lmr-240-connector-ez-240-4310m-x-p.aspx

The information contained in this document is accurate to the best of our knowledge and representative of the part described herein. It may be necessary to make modifications to the part and/or the documentation of the part, in order to implement improvements. Pasternack reserves the right to make such changes as required. Unless otherwise stated, all specifications are nominal. Pasternack does not make any representation or warranty regarding the suitability of the part described herein for any particular purpose, and Pasternack does not assume any liability arising out of the use of any part or documentation.

Pasternack Enterprises, Inc. • P.O. Box 16759, Irvine, CA 92623
Phone: (866) 727-8376 or (949) 261-1920 • **Fax:** (949) 261-7451
Sales@Pasternack.com • Techsupport@Pasternack.com

© 2018 Pasternack Enterprises All Rights Reserved

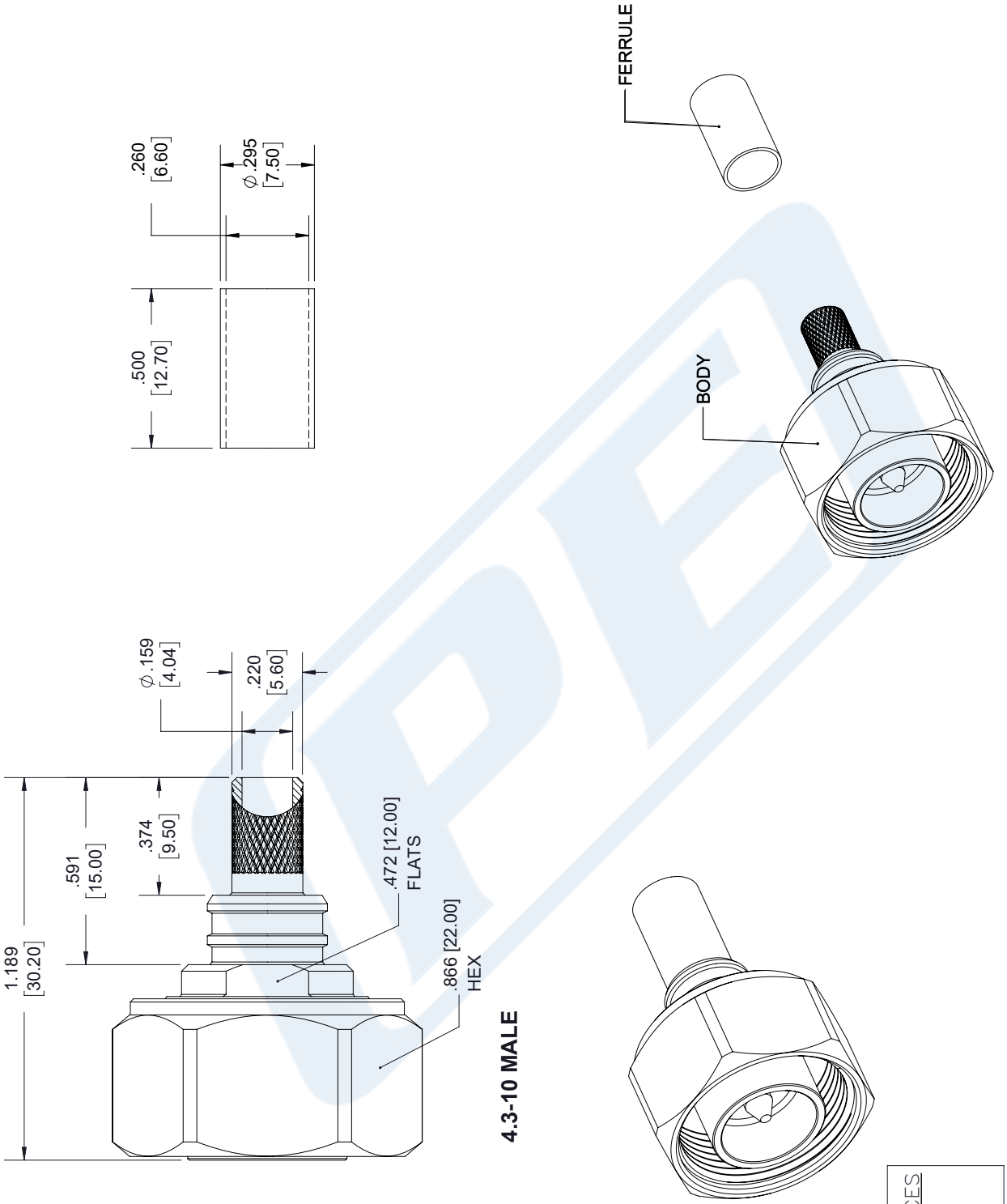

STANDARD TOLERANCES	
.X	±0.2
.XX	±0.01
.XXX	±0.005

*STANDARD TOLERANCES APPLY ONLY TO DIMENSIONS IN INCHES

NOTES:
1. UNLESS OTHERWISE SPECIFIED ALL DIMENSIONS ARE NOMINAL.
2. ALL SPECIFICATIONS ARE SUBJECT TO CHANGE WITHOUT NOTICE AT ANY TIME.
3. DIMENSIONS ARE IN INCHES [mm].

DWG TITLE: EZ-240-4310M-X

CAD FILE 04/18/18 | SCALE N/A | SIZE A | 7361

CAGE CODE 53919

PASTERNACK® THE ENGINEER'S RF SOURCE
Pasternack Enterprises, Inc.
P.O. Box 16759 | Irvine | CA | 92623
Phone: (949) 261-1920 | **Fax:** (949) 261-7451
Website: www.pasternack.com | **E-Mail:** sales@pasternack.com

© 2018 Pasternack Enterprises All Rights Reserved

PASTERNACK
an INFINITE brand

RP-TNC Jack Connector Crimp/Non-Solder Contact Attachment for LMR-240, LMR-240-DB, LMR-240-UF, LMR-240-FR, RG8X, PE-C240

RF Connectors
Technical Data Sheet

TIMES MICROWAVE SYSTEMS

EZ-240-TF-RP-X

Times Microwave Systems Connector Specification

Configuration

- TNC Jack Reverse Polarity Connector
- 50 Ohms
- Straight Body Geometry
- Connector Interface Types: LMR-240, LMR-240-DB, LMR-240-UF, LMR-240-FR, RG8X, PE-C240

Features

- Max. Operating Frequency 6 GHz
- Good VSWR of 1.3:1
- Tri-Metal Plated Brass Contact
- 80 µin minimum contact plating
- Reverse Polarity

Applications

- General Purpose Test
- Custom Cable Assemblies

Description

EZ-240-TF-RP-X RP TNC jack coaxial connector has an interface type of TNC jack LMR-240, LMR-240-DB, LMR-240-UF, LMR-240-FR, RG8X, and PE-C240 and a 50 Ohms impedance. Pasternack's TNC jack connector uses crimp/non-solder contact as an attachment method. Our jack TNC coaxial connector provides a maximum frequency of 6 GHz.

The Pasternack TNC jack coaxial connector has a PTFE dielectric type and a VSWR of 1.3:1. Pasternack's TNC coaxial connector has a brass body with tri-metal plating. Our EZ-240-TF-RP-X TNC connector uses a tri-metal plated brass contact. Additional RF connector specs and dimensions for this component can be found on its PDF specification datasheet and CAD drawings above.

The radio frequency connector is made from brass material and has a contact life of 500 cycles or more. Our high-quality EZ-240-TF-RP-X features an 80 µin minimum body plating specification. The Pasternack EZ-240-TF-RP-X TNC connector operates at a temperature range of -40 to 125 deg C.

This Pasternack reverse polarity jack TNC connector will ship the same business day as purchased. Our TNC jack connector is part of over 40,000 RF, microwave, and millimeter wave components in stock for local, domestic, and international shipment. For further information on similar products, our expert technical support and trained sales team can get you the ideal RF connector as per your requirements.

Electrical Specifications

Description	Minimum	Typical	Maximum	Units
Frequency Range	DC		6	GHz
VSWR			1.3:1	
Insertion Loss			0.24	dB
Impedance		50		Ohms
Dielectric Withstanding Voltage (DC)			1,500	Vdc
Insulation Resistance	5,000			MOhms

Click the following link (or enter part number in "SEARCH" on website) to obtain additional part information including price, inventory and certifications: RP-TNC Jack Connector Crimp/Non-Solder Contact Attachment for LMR-240, LMR-240-DB, LMR-240-UF, LMR-240-FR, RG8X, PE-C240 EZ-240-TF-RP-X

Pasternack Enterprises, Inc. • P.O. Box 16759, Irvine, CA 92623
Phone: (866) 727-8376 or (949) 261-1920 • **Fax:** (949) 261-7451
Sales@Pasternack.com • Techsupport@Pasternack.com

© 2020 Pasternack Enterprises All Rights Reserved

RP-TNC Jack Connector Crimp/Non-Solder Contact Attachment for LMR-240, LMR-240-DB, LMR-240-UF, LMR-240-FR, RG8X, PE-C240

Electrical Specification Notes:
Insertion Loss is 0.1*SQRT(fGHz) dB

Mechanical Specifications

Size

Length	1.20 in [30.48 mm]
Width	0.43 in [10.92 mm]
Height	0.43 in [10.92 mm]
Weight	0.10 lbs [45.36 g]
Mating Cycles	500 Cycles
Cable Retention Force	250 lbs 113.4 kg

Material Specifications

Description	Material	Plating
Contact	Brass	Tri-Metal 80 µin minimum
Insulation	PTFE	
Body	Brass	Tri-Metal 80 µin minimum
Crimp Sleeve	Brass	Tri-Metal 80 µin minimum

Environmental Specifications

Temperature

Operating Range	-40 to +125 deg C
Shock	MIL-STD 202G, Meth.213, Cond.G
Vibration	MIL-STD 202G, Meth.204, Cond.B
Thermal Shock	MIL-STD 202G, Meth.107, Cond.B

Compliance Certifications (see product page for current document)

Plotted and Other Data

Notes:

Click the following link (or enter part number in “SEARCH” on website) to obtain additional part information including price, inventory and certifications: RP-TNC Jack Connector Crimp/Non-Solder Contact Attachment for LMR-240, LMR-240-DB, LMR-240-UF, LMR-240-FR, RG8X, PE-C240 EZ-240-TF-RP-X

Pasternack Enterprises, Inc. • P.O. Box 16759, Irvine, CA 92623
Phone: (866) 727-8376 or (949) 261-1920 • **Fax:** (949) 261-7451
Sales@Pasternack.com • Techsupport@Pasternack.com

© 2020 Pasternack Enterprises All Rights Reserved

RP-TNC Jack Connector Crimp/Non-Solder Contact Attachment for LMR-240, LMR-240-DB, LMR-240-UF, LMR-240-FR, RG8X, PE-C240

RF Connectors
Technical Data Sheet

TIMES MICROWAVE SYSTEMS

EZ-240-TF-RP-X

RP-TNC Jack Connector Crimp/Non-Solder Contact Attachment for LMR-240, LMR-240-DB, LMR-240-UF, LMR-240-FR, RG8X, PE-C240 from Pasternack Enterprises has same day shipment for domestic and International orders. Our RF, microwave and millimeter wave products maintain a 99.4% availability and are part of the broadest selection in the industry.

Click the following link (or enter part number in “SEARCH” on website) to obtain additional part information including price, inventory and certifications: RP-TNC Jack Connector Crimp/Non-Solder Contact Attachment for LMR-240, LMR-240-DB, LMR-240-UF, LMR-240-FR, RG8X, PE-C240 EZ-240-TF-RP-X

URL: https://www.pasternack.com/tnc-jack-reverse-polarity-lmr-240-connector-ez-240-tf-rp-x-p.aspx

The information contained in this document is accurate to the best of our knowledge and representative of the part described herein. It may be necessary to make modifications to the part and/or the documentation of the part, in order to implement improvements. Pasternack reserves the right to make such changes as required. Unless otherwise stated, all specifications are nominal. Pasternack does not make any representation or warranty regarding the suitability of the part described herein for any particular purpose, and Pasternack does not assume any liability arising out of the use of any part or documentation.

Pasternack Enterprises, Inc. • P.O. Box 16759, Irvine, CA 92623
Phone: (866) 727-8376 or (949) 261-1920 • **Fax:** (949) 261-7451
Sales@Pasternack.com • Techsupport@Pasternack.com

© 2020 Pasternack Enterprises All Rights Reserved

EZ-240-TF-RP-X CAD Drawing

RP-TNC Jack Connector Crimp/Non-Solder Contact Attachment for LMR-240, LMR-240-DB, LMR-240-UF, LMR-240-FR, RG8X, PE-C240

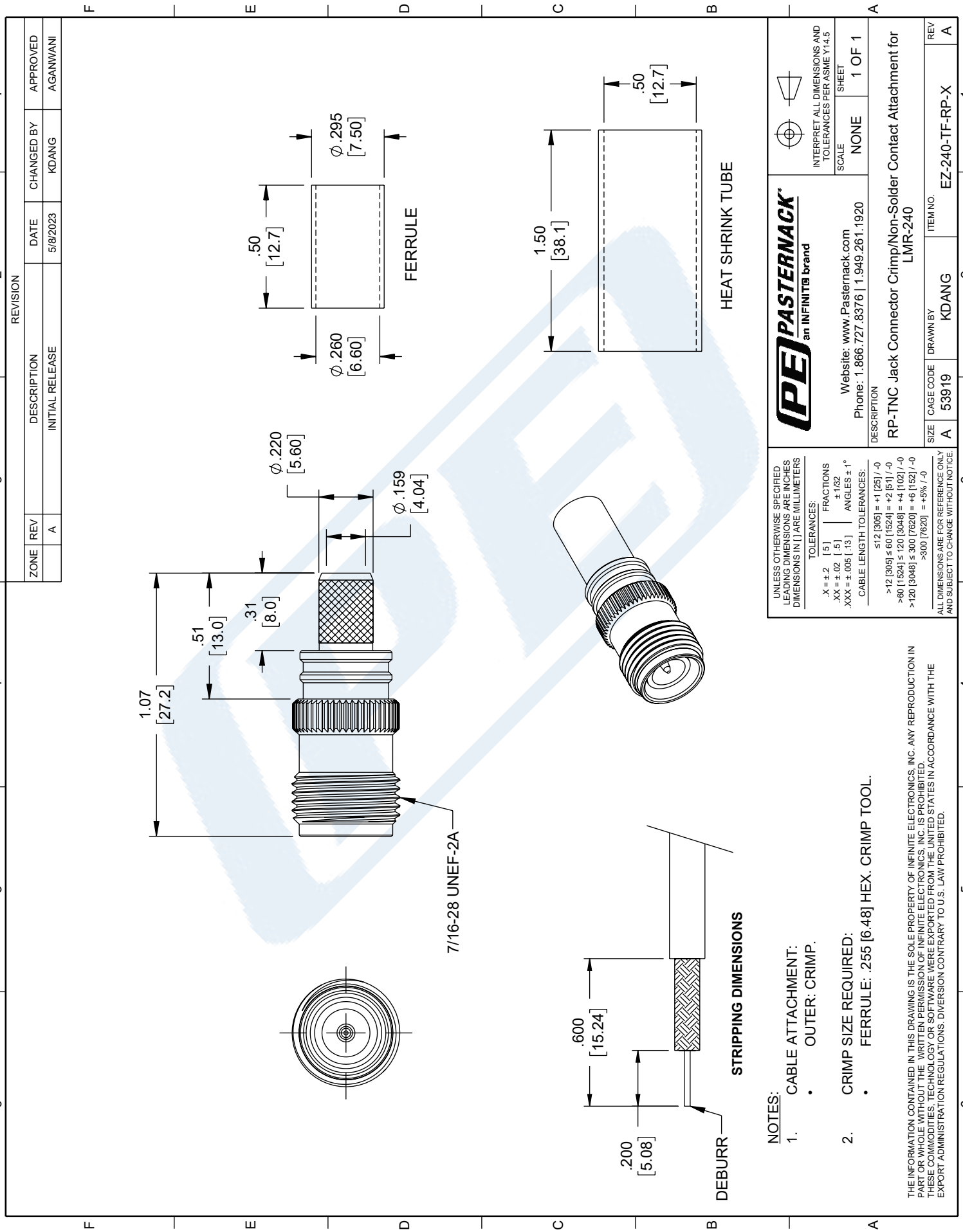

© 2020 Pasternack Enterprises All Rights Reserved

TIMES MICROWAVE SYSTEMS

LMR®-240
Flexible Low Loss Communications Coax

Ideal for...

- Jumper Assemblies in Wireless Communications Systems
- Short Antenna Feeder runs (e.g. WLL, GPS, LMR, Mobile Antennas)
- Any application (e.g. WLL, GPS, LMR, WLAN, WISP, WiMax, SCADA, Mobile Antennas) requiring an easily routed, low loss RF cable

• **LMR®** standard is a UV Resistant Polyethylene jacketed cable designed for 20-year service outdoor use. The bending and handling characteristics are significantly better than air-dielectric and corrugated hard-line cables.

• **LMR®- DB** is identical to standard LMR plus has the advantage of being watertight. The addition of waterproofing compound in and around the foil/braid insures continuous reliable service should the jacket be inadvertently damaged during installation or in the future.

• **LMR®- FR** is a non-halogen (non-toxic), low smoke, fire retardant cable designed for in-building runs that can be routed anywhere except air handling plenums. LMR-FR is UL/NEC & CSA rated 'CMR' and 'FT4' respectively, meets FAA FAR25 requirements and is MSHA-P for mining applications.

• **LMR®- FR-PVC** is a general-purpose indoor cable and has a UL/NEC & CSA rating of 'CMR' and 'FT4' respectively. It is less expensive than LMR-FR, however it emits toxic fumes (HCL) and greater smoke density when burned.

• **LMR®- PVC** is designed for low loss general-purpose applications and is somewhat more flexible than the standard polyethylene jacketed LMR.

• **LMR®- PVC-W** is a white-jacketed version of LMR-PVC for marine and other applications where color compatibility is desired.

• **LMR®- MA** is a flexible cable designed specifically for mobile antenna applications. It has a PVC jacket and un-bonded aluminum tape to facilitate end stripping with automated equipment.

• **Flexibility** and bendability are hallmarks of the LMR-240 cable design. The flexible outer conductor enables the tightest bend radius available for any cable of similar size and performance.

• **Low Loss** is another hallmark feature of LMR-240. Size for size LMR has the lowest loss of any flexible cable and comparable loss to semirigid hard-line cables.

• **RF Shielding** is 50 dB greater than typical single shielded coax (40 dB). The multi-ply bonded foil outer conductor is rated conservatively at > 90 dB (i.e. >180 dB between two adjacent cables).

• **Weatherability**: LMR-240 cables designed for outdoor exposure incorporate the best materials for UV resistance and have life expectancy in excess of 20 years.

• **Connectors**: A wide variety of connectors are available for LMR-240 cable, including all common interface types, reverse polarity, and a choice of solder or non-solder center pins. Most LMR connectors employ crimp outer attachment using standard hex crimp sizes.

• **Cable Assemblies**: All LMR-240 cable types are available as pre-terminated cable assemblies. Refer to the section on FlexTech for further details.

Part Description

Part Number	Application	Jacket	Color	Stock Code
LMR-240	Outdoor	PE	Black	54021
LMR-240-DB	Outdoor/Watertight	PE	Black	54090
LMR-240-FR	Indoor/Outdoor Riser CMR	FRPE	Black	54029
LMR-240-FR-PVC	Indoor/Outdoor Riser CMR	FRPVC	Black	54214
LMR-240-PVC	General Purpose	PVC	Black	54140
LMR-240-PVC-W	General Purpose	PVC	White	54202
LMR-240-MA	Indoor & Mobile Antenna	PVC	Black	54046

Construction Specifications

Description	Material	In.	(mm)
Inner Conductor	Solid BC	0.056	(1.42)
Dielectric	Foam PE	0.150	(3.81)
Outer Conductor	Aluminum Tape	0.155	(3.94)
Overall Braid	Tinned Copper	0.178	(4.52)
Jacket	(see table above)	0.240	(6.10)

Mechanical Specifications

Performance Property	Units	US	(metric)
Bend Radius: installation	in. (mm)	0.75	(19.1)
Bend Radius: repeated	in. (mm)	2.5	(63.5)
Bending Moment	ft-lb (N-m)	0.25	(0.34)
Weight	lb/ft (kg/m)	0.034	(0.05)
Tensile Strength	lb (kg)	80	(36.3)
Flat Plate Crush	lb/in. (kg/mm)	20	(0.36)

Environmental Specifications

Performance Property	°F	°C
Installation Temperature Range	-40/+185	-40/+85
Storage Temperature Range	-94/+185	-70/+85
Operating Temperature Range	-40/+185	-40/+85

Electrical Specifications

Performance Property	Units	US	(metric)
Velocity of Propagation	%	84	
Dielectric Constant	NA	1.42	
Time Delay	nS/ft (nS/m)	1.21	(3.97)
Impedance	ohms	50	
Capacitance	pF/ft (pF/m)	24.2	(79.4)
Inductance	uH/ft (uH/m)	0.060	(0.20)
Shielding Effectiveness	dB	>90	
DC Resistance			
Inner Conductor	ohms/1000ft (/km)	3.2	(10.5)
Outer Conductor	ohms/1000ft (/km)	3.89	(12.8)
Voltage Withstand	Volts DC	1500	
Jacket Spark	Volts RMS	5000	
Peak Power	kW	5.6	

Attenuation vs. Frequency (typical)

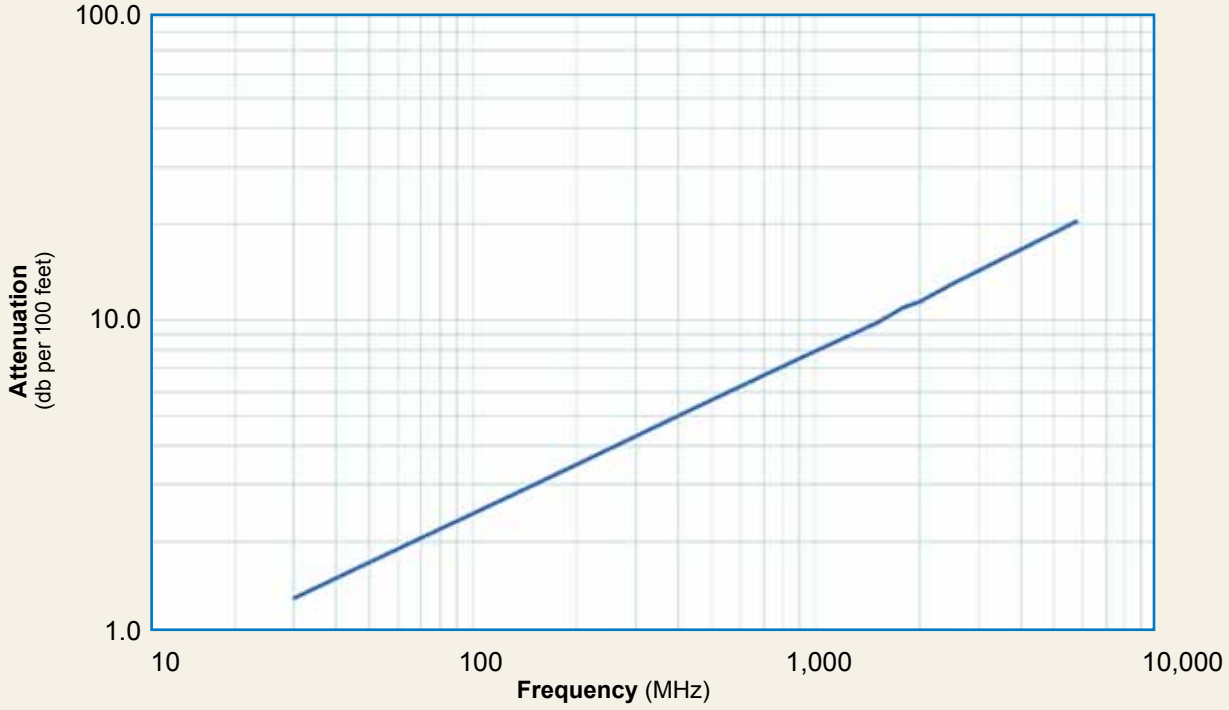

Frequency (MHz)	30	50	150	220	450	900	1500	1800	2000	2500	5800
Attenuation dB/100 ft	1.3	1.7	3.0	3.7	5.3	7.6	9.9	10.9	11.5	12.9	20.4
Attenuation dB/100 m	4.4	5.7	9.9	12.0	17.3	24.8	32.4	35.6	37.7	42.4	66.8
Avg. Power kW	1.49	1.15	0.66	0.54	0.38	0.26	0.20	0.18	0.17	0.15	0.10

Calculate Attenuation =

$(0.242080) \cdot \sqrt{FMHz} + (0.000330) \cdot FMHz$ (interactive calculator available at http://www.timesmicrowave.com/cable_calculators)

Attenuation:

VSWR=1.0 ; Ambient = +25°C (77°F)

Power: VSWR=1.0; Ambient = +40°C; Inner Conductor = 100°C (212°F); Sea Level; dry air; atmospheric pressure; no solar loading

TIMES MICROWAVE SYSTEMS

LMR®-240
Flexible Low Loss Communications Coax

Connectors

Interface	Description	Part Number	Stock Code	VSWR** Freq. (GHz)	Coupling Nut	Inner Contact Attach	Outer Contact Attach	Finish* Body /Pin	Length in	Length (mm)	Width in	Width (mm)	Weight lb	Weight (g)
F Male	Straight Plug	TC-240-FM	3190-924	<1.25:1 (2.5)	Knurl	Solder	Crimp	N/G	1.1	(28)	0.45	(11.4)	0.014	(6.4)
N Male	Straight Plug	EZ-240-NMH-D	3190-1127	<1.25:1 (2.5)	Hex/Knurl	Spring Finger	Crimp	A/G	1.5	(38.1)	0.78	(19.8)	0.086	(39.0)
N Male	Right Angle	TC-240-NM-RA	3190-2426	<1.35:1 (6)	Hex	Solder	Crimp	A/G	1.3	(32.4)	1.22	(31.0)	0.092	(41.7)
N Male	Right Angle	TC-240-NMH-RA-D	3190-2426	<1.35:1 (6)	Hex/Knurl	Solder	Crimp	A/G	1.2	(32.4)	1.22	(31.0)	0.091	(41.7)
N Male	Straight Plug	TC-240-NMH-D	3190-382#	<1.25:1 (2.5)	Hex/Knurl	Solder	Crimp	N/S	1.5	(38)	0.75	(19.1)	0.086	(39.0)
N Male	Straight Plug	TC-240-NMC	3190-244	<1.25:1 (2.5)	Knurl	Solder	Clamp	S/G	1.5	(38)	0.75	(19.1)	0.082	(37.2)
1.0/2.3 DIN	Straight Plug	EZ-240-1023M	3190-2512	<1.35:1 (2.5)	knurl	Spring Finger	Crimp	N/G	1.1	(228.5)	0.33	(8.5)	0.014	(6.63)
N Female	Bulkhead Jack	TC-240-NF-BH	3190-419	<1.25:1 (2.5)	NA	Solder	Crimp	A/G	1.7	(44)	0.88	(22.2)	0.115	(52.2)
N Female	Panel Mount	TC-240-NF-BHF(A)	3190-866#	<1.25:1 (2.5)	NA	Solder	Crimp	A/G	1.7	(44)	0.88	(22.2)	0.115	(52.2)
BNC Male	Straight Plug	TC-240-BMC	3190-242	<1.25:1 (2.5)	Knurl	Solder	Clamp	S/G	1.7	(43)	0.56	(14.2)	0.040	(18.1)
BNC Male	Straight Plug	TC-240-BM(A)	3190-867	<1.25:1 (2.5)	Knurl	Solder	Crimp	A/G	1.7	(43)	0.5 6	(14.2)	0.043	(19.5)
TNC Male	Straight Plug	EZ-240-TM	3190-1128	<1.25:1 (2.5)	Knurl	Spring Finger	Crimp	N/G	1.4	(34.3)	0.59	(15.0)	0.043	(19.5)
TNC Male	Straight Plug	TC-240-TM	3190-275	<1.25:1 (2.5)	Knurl	Solder	Crimp	N/G	1.7	(43)	0.59	(15.0)	0.043	(19.5)
TNC Male	Right Angle	TC-240-TM-RA	3190-604	<1.35:1 (2.5)	Knurl	Solder	Crimp	N/G	1.3	(33)	0.57	(14.5)	0.055	(24.9)
TNC Male	Reverse Polarity	EZ-240-TM-RP	3190-970	<1.25:1 (2.5)	Knurl	Spring Finger	Crimp	A/G	1.4	(36)	0.59	(15.0)	0.043	(19.5)
QMA Male	Straight Plug	EZ-240-QM	3190-1533	<1.25: (6)	Knurl	Spring Finger	Crimp	N/G	1.2	(30.0)	0.41	(10.5)	0.014	(6.35)
QMA Male	Right Angle	EZ-240-QM-RA	3190-1539	<1.25: (<6)	Knurl	Spring Finger	Crimp	N/G	0.8	(20.3)	0.65	(16.5)	0.019	(8.62)
SMA Male	Straight Plug	EZ-240-SM	3190-1530	<1:25: (6)	Hex	Spring Finger	Crimp	N/G	1.0	(25.4)	0.32	(8.1)	0.016	(7.26)
SMA Male	Straight Plug	TC-240-SM	3190-380#	<1.25:1 (10)	Hex	Solder	Crimp	SS/G	1.0	(25)	0.32	(8.1)	0.016	(7.3)
SMA Male	Right Angle	TC-240-SM-RA	3190-381#	<1.35:1 (6)	Hex	Solder	Crimp	SS/G	0.8	(20)	0.65	(16.5)	0.019	(8.6)
SMA Male	Reverse Polarity	TC-240-SM-RP	3190-326	<1.25:1 (2.5)	Hex	Solder	Crimp	SS/G	1.0	(25)	0.32	(8.1)	0.016	(7.3)
SMA Female	Bulkhead Jack	TC-240-SF-BH	3190-824#	<1.25:1 (2.5)	NA	Solder	Crimp	SS/G	1.1	(29)	0.31	(7.9)	0.019	(8.6)
Mini-UHF	Straight Plug	TC-240-MUHF	3190-445	<1.25:1 (2.5)	Knurl	Solder	Crimp	N/G	1.1	(28)	0.45	(11.4)	0.014	(6.4)

* Finish metals: N=Nickel, S=Silver, G=Gold, SS=Stainless Steel, A=Alballoy **VSWR spec based on 3 foot cable with a connector pair #Available in bulk pack

TC-240-SM-RA

TC-240-SM-RP

TC-240-SF-BH

TC-240-MUHF

EZ-240-QM

EZ-240-QM-RA

EZ-240-SM

TC-240-NF-BHF (A)

GK-S240TT

Hardware Accessories

Type	Part Number	Stock Code	Description
Ground Kit	GK-S240TT	GK-S240TT	Standard Ground Kit (each)

CT-240/200/195/100

CCT-01

RB-CST

DBT-U

CST-240

Install Tools

Type	Part Number	Stock Code	Description
Crimp Tool	CT-240/200/195/100	3190-667	Crimp tool for LMR-100, 195, 200 and 240 connectors
Strip Tool	CST-240	3192-070	Strip tool
Deburr Tool	DBT-U	3192-001	Removes center conductor rough edges
Cutting Tool	CCT-01	3190-1544	Cable end flush cut tool
Replacement Blade	RB-01	3190-1609	Replacement blade for cutting tool
Replacement	RB-CST	3192-086	Replacement blade kit for all CST strip tools