PASTERNACK®
THE ENGINEER'S RF SOURCE

QMA Male Connector Crimp/Solder Attachment for PE-C195, PE-P195, RG58, RG141, RG303, LMR-195, 0.195 inch

Configuration

- QMA Male Connector
- 50 Ohms
- Straight Body Geometry
- PE-C195, PE-P195, RG58, RG141, RG303, LMR-195, 0.195 inch Interface Type
- Crimp/Solder Attachment

Features

- Max. Operating Frequency 6 GHz
- Excellent VSWR of 1.15:1
- Gold Plated Brass Contact

Applications

- General Purpose Test
- Custom Cable Assemblies

Description

Pasternack's PE44503 QMA male connector with crimp/solder attachment for PE-C195, PE-P195, RG58, RG141, RG303, LMR-195 and 0.195 inch is part of our full line of RF components available for same-day shipping. Our QMA male connector operates up to a maximum frequency of 6 GHz and offers excellent VSWR of 1.15:1.

Our QMA male connector PE44503 datasheet specifications and drawing with dimensions are shown below in this PDF. Pasternack's broad catalog of RF, microwave and millimeter wave connectors allows designers to configure and customize their signal connections however they like. Whether the need is to provide an I/O for a board design, or simply create a custom cable assembly configuration, Pasternack has the right connector for the job. Pasternack can also expertly build your custom cable assemblies for you and ship same-day.

Electrical Specifications

Description	Minimum	Typical	Maximum	Units
Frequency Range	DC		6	GHz
VSWR			1.15:1	
Operating Voltage (AC)			333	Vrms
Dielectric Withstanding Voltage (AC)			1,000	Vrms

Mechanical Specifications

Size	
Length	0.932 in [23.67 mm]
Width/Dia.	0.41 in [10.41 mm]
Weight	0.015 lbs [6.8 g]
Mating Cycles	500 Cycles

Click the following link (or enter part number in "SEARCH" on website) to obtain additional part information including price, inventory and certifications: QMA Male Connector Crimp/Solder Attachment for PE-C195, PE-P195, RG58, RG141, RG303, LMR-195, 0.195 inch PE44503

Pasternack Enterprises, Inc. • P.O. Box 16759, Irvine, CA 92623
Phone: (866) 727-8376 or (949) 261-1920 • **Fax:** (949) 261-7451
Sales@Pasternack.com • Techsupport@Pasternack.com

© 2016 Pasternack Enterprises All Rights Reserved

QMA Male Connector Crimp/Solder Attachment for PE-C195, PE-P195, RG58, RG141, RG303, LMR-195, 0.195 inch

Material Specifications

Description	Material	Plating
Contact	Brass	Gold
Insulation	PTFE	
Outer Conductor	Phosphor Bronze	Tri-Metal
Body	Brass	Tri-Metal

Environmental Specifications

Temperature

Operating Range -65 to +165 deg C

Compliance Certifications (see product page for current document)

Plotted and Other Data

Notes:

QMA Male Connector Crimp/Solder Attachment for PE-C195, PE-P195, RG58, RG141, RG303, LMR-195, 0.195 inch from Pasternack Enterprises has same day shipment for domestic and International orders. Our RF, microwave and millimeter wave products maintain a 99% availability and are part of the broadest selection in the industry.

Click the following link (or enter part number in "SEARCH" on website) to obtain additional part information including price, inventory and certifications: QMA Male Connector Crimp/Solder Attachment for PE-C195, PE-P195, RG58, RG141, RG303, LMR-195, 0.195 inch PE44503

URL: https://www.pasternack.com/qma-male-standard-rg58-rg141-connector-pe44503-p.aspx

The information contained in this document is accurate to the best of our knowledge and representative of the part described herein. It may be necessary to make modifications to the part and/or the documentation of the part, in order to implement improvements. Pasternack reserves the right to make such changes as required. Unless otherwise stated, all specifications are nominal. Pasternack does not make any representation or warranty regarding the suitability of the part described herein for any particular purpose, and Pasternack does not assume any liability arising out of the use of any part or documentation.

Pasternack Enterprises, Inc. • P.O. Box 16759, Irvine, CA 92623
Phone: (866) 727-8376 or (949) 261-1920 • **Fax:** (949) 261-7451
Sales@Pasternack.com • Techsupport@Pasternack.com

© 2016 Pasternack Enterprises All Rights Reserved

PE44503 CAD Drawing

QMA Male Connector Crimp/Solder Attachment for PE-C195, PE-P195, RG58, RG141, RG303, LMR-195, 0.195 inch

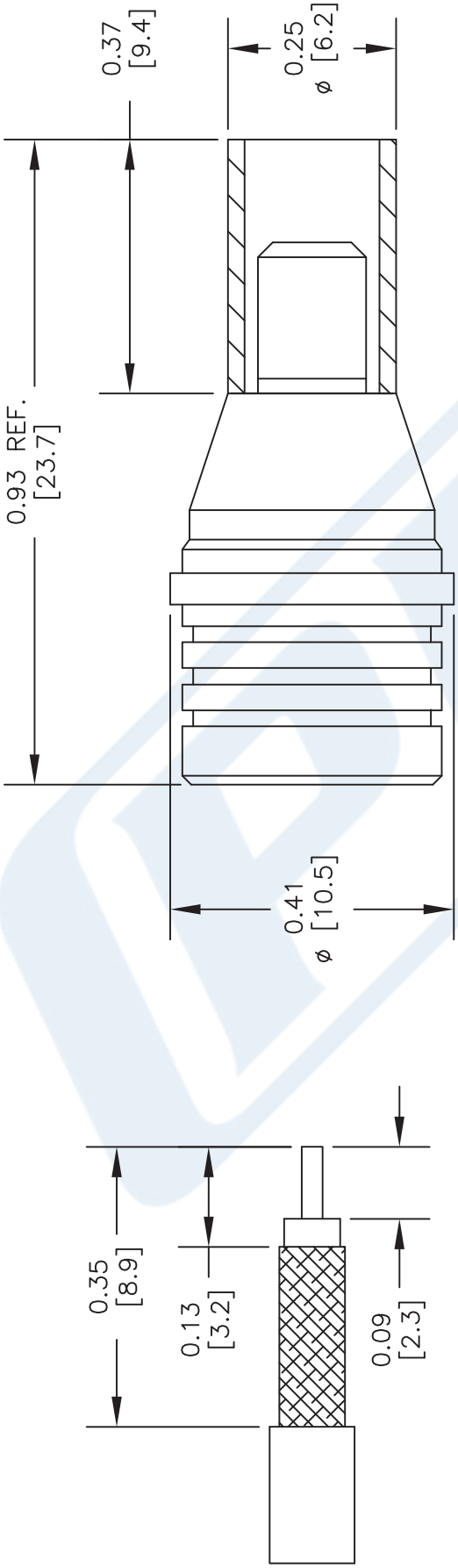

STRIPPING DIMENSIONS

CRIMP SIZE REQUIRED

CONTACT: SOLDER
FERRULE: .213" HEX CRIMP TOOL

NOTES:
1. UNLESS OTHERWISE SPECIFIED ALL DIMENSIONS ARE NOMINAL.
2. ALL SPECIFICATIONS ARE SUBJECT TO CHANGE WITHOUT NOTICE AT ANY TIME.
3. DIMENSIONS ARE IN INCHES [mm].
4. FITS MIL-C-17 AND EQUIVALENT CABLES.

DWG TITLE
PE44503

REV. G	FSCM NO. 53919	CAD FILE 032312	SCALE N/A	SIZE A	2233

PASTERNACK®
THE ENGINEER'S RF SOURCE
Pasternack Enterprises, Inc.
P.O. Box 16759 | Irvine | CA | 92623
Phone: (949) 261-1920 | **Fax:** (949) 261-7451
Website: www.pasternack.com | **E-Mail:** sales@pasternack.com

© 2016 Pasternack Enterprises All Rights Reserved

PASTERNACK®
THE ENGINEER'S RF SOURCE

UHF Female Connector Clamp/Solder Attachment for RG58, RG55, RG141, RG142, RG223, RG400, RG303, PE-C195, PE-P195, LMR-195

RF Connectors Technical Data Sheet PE44056

Configuration

- UHF Female Connector
- 50 Ohms
- Straight Body Geometry
- RG58, RG55, RG141, RG142, RG223, RG400, RG303, PE-C195, PE-P195, LMR-195 Interface Type
- Clamp/Solder Attachment

Features

- Gold Plated Contact

Applications

- General Purpose Test
- Custom Cable Assemblies

Description

Pasternack's PE44056 UHF female connector with clamp/solder attachment for RG58, RG55, RG141, RG142, RG223, RG400, RG303, PE-C195, PE-P195 and LMR-195 is part of our full line of RF components available for same-day shipping.

Our UHF female connector PE44056 datasheet specifications and drawing with dimensions are shown below in this PDF. Pasternack's broad catalog of RF, microwave and millimeter wave connectors allows designers to configure and customize their signal connections however they like. Whether the need is to provide an I/O for a board design, or simply create a custom cable assembly configuration, Pasternack has the right connector for the job. Pasternack can also expertly build your custom cable assemblies for you and ship same-day.

Mechanical Specifications

Size

Length	1.46 in [37.08 mm]
Width/Dia.	0.63 in [16.00 mm]
Weight	0.055 lbs [24.95 g]

Material Specifications

Description	Material	Plating
Contact		Gold
Insulation	PTFE	
Body	Brass	Nickel

Click the following link (or enter part number in "SEARCH" on website) to obtain additional part information including price, inventory and certifications: UHF Female Connector Clamp/Solder Attachment for RG58, RG55, RG141, RG142, RG223, RG400, RG303, PE-C195, PE-P195, LMR-195 PE44056

Pasternack Enterprises, Inc. • P.O. Box 16759, Irvine, CA 92623
Phone: (866) 727-8376 or (949) 261-1920 • **Fax:** (949) 261-7451
Sales@Pasternack.com • Techsupport@Pasternack.com

© 2016 Pasternack Enterprises All Rights Reserved

UHF Female Connector Clamp/Solder Attachment for RG58, RG55, RG141, RG142, RG223, RG400, RG303, PE-C195, PE-P195, LMR-195

Compliance Certifications (see product page for current document)

Plotted and Other Data

Notes:

UHF Female Connector Clamp/Solder Attachment for RG58, RG55, RG141, RG142, RG223, RG400, RG303, PE-C195, PE-P195, LMR-195 from Pasternack Enterprises has same day shipment for domestic and International orders. Our RF, microwave and millimeter wave products maintain a 99% availability and are part of the broadest selection in the industry.

Click the following link (or enter part number in "SEARCH" on website) to obtain additional part information including price, inventory and certifications: UHF Female Connector Clamp/Solder Attachment for RG58, RG55, RG141, RG142, RG223, RG400, RG303, PE-C195, PE-P195, LMR-195 PE44056

URL: https://www.pasternack.com/uhf-female-standard-rg58-rg55-rg141-rg142-rg223-rg400-connector-pe44056-p.aspx

The information contained in this document is accurate to the best of our knowledge and representative of the part described herein. It may be necessary to make modifications to the part and/or the documentation of the part, in order to implement improvements. Pasternack reserves the right to make such changes as required. Unless otherwise stated, all specifications are nominal. Pasternack does not make any representation or warranty regarding the suitability of the part described herein for any particular purpose, and Pasternack does not assume any liability arising out of the use of any part or documentation.

Pasternack Enterprises, Inc. • P.O. Box 16759, Irvine, CA 92623
Phone: (866) 727-8376 or (949) 261-1920 • **Fax:** (949) 261-7451
Sales@Pasternack.com • Techsupport@Pasternack.com

© 2016 Pasternack Enterprises All Rights Reserved

PE44056 CAD Drawing

UHF Female Connector Clamp/Solder Attachment for RG58, RG55, RG141, RG142, RG223, RG400, RG303, PE-C195, PE-P195, LMR-195

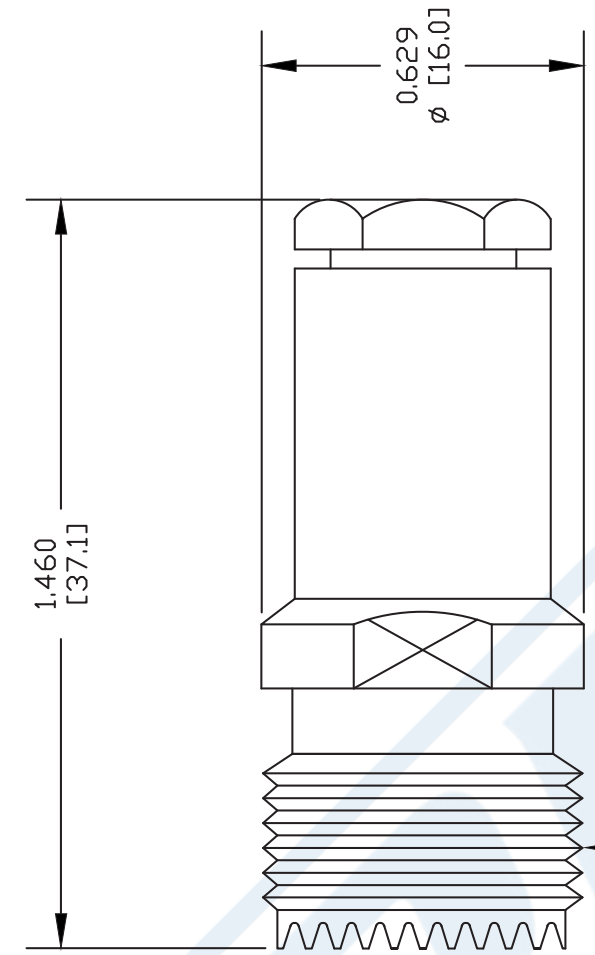

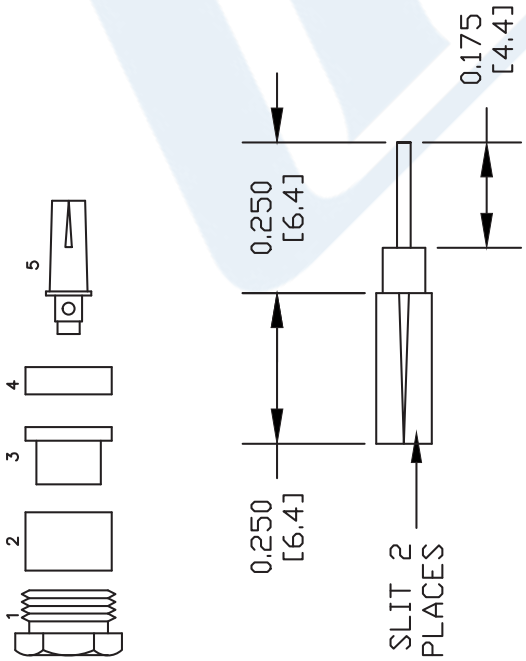

STRIPPING DIMENSIONS

ASSEMBLY PROCEDURES

1. SLIDE CLAMP NUT (1) & GASKET (2) OVER CABLE. STRIP CABLE AS SHOWN.
2. INSERT BRAID CLAMP (3) BETWEEN BRAID & DIELECTRIC. SLIDE INSULATOR (4) OVER CENTER CONDUCTOR INSERT CONTACT (5) INTO INSULATOR (4) & SOLDER TO CENTER CONDUCTOR.
3. SLIDE CABLE ASSEMBLY INTO BODY & TIGHTEN.

NOTES:
1. UNLESS OTHERWISE SPECIFIED ALL DIMENSIONS ARE NOMINAL.
2. ALL SPECIFICATIONS ARE SUBJECT TO CHANGE WITHOUT NOTICE AT ANY TIME.
3. DIMENSIONS ARE IN INCHES [mm].
4. FITS MIL-C-17 AND EQUIVALENT CABLES.

DWG TITLE
PE44056

FSCM NO. 53919

CAD FILE 062402 | SCALE N/A | SIZE A | XXXX

PASTERNACK®
Pasternack Enterprises, Inc.
P.O. Box 16759 | Irvine | CA | 92623
Phone: (949) 261-1920 | **Fax:** (949) 261-7451
Website: www.pasternack.com | **E-Mail:** sales@pasternack.com

© 2016 Pasternack Enterprises All Rights Reserved

Flexible RG58 Coax Cable Single Shielded with Black PVC (NC) Jacket

Configuration

- Flexible Cable
- 1 Shield(s)

Electrical Specifications

Description	Minimum	Typical	Maximum	Units
Frequency Range	DC		5	GHz
Impedance		50		Ohms
Velocity of Propagation		65.9		%
Operating Voltage (AC)			1,900	Vrms
Nominal Capacitance		30.8 [101.05]		pF/ft [pF/m]

Performance by Frequency Band

Description	F1	F2	F3	F4	F5	Units
Frequency	0.01	0.1	1	5		GHz
Attenuation, Typ	1.4	4.9	20	60		dB/100ft
	4.59	16.08	65.62	196.85		dB/100m
Input Power (CW), Max			44			Watts

Mechanical Specifications

Diameter	0.195 in [4.95 mm]
Weight	0.025 lbs/ft [0.04 Kg/m]
Min. Bend Radius (Installation)	0.98 in [24.89 mm]
Min. Bend Radius (Repeated)	1.96 in [49.78 mm]

Construction Specifications

Description	Material and Plating	Diameter
Inner Conductor	Copper, Tin, 19 Strands	0.036 in [0.91 mm]
Conductor Type	Stranded	
Dielectric	PE	0.116 in [2.95 mm]

Click the following link (or enter part number in “SEARCH” on website) to obtain additional part information including price, inventory and certifications: Flexible RG58 Coax Cable Single Shielded with Black PVC (NC) Jacket RG58C/U

Pasternack Enterprises, Inc. • P.O. Box 16759, Irvine, CA 92623
Phone: (866) 727-8376 or (949) 261-1920 • **Fax:** (949) 261-7451
Sales@Pasternack.com • Techsupport@Pasternack.com

© 2017 Pasternack Enterprises All Rights Reserved

Flexible RG58 Coax Cable Single Shielded with Black PVC (NC) Jacket

First Shield	Tinned Copper Braid	0.138 in [3.51 mm]
Jacket	PVC (NC), Black	0.195 in [4.95 mm]

Environmental Specifications

Temperature

Operating Range	-40 to +80 deg C

Compliance Certifications (see product page for current document)

Plotted and Other Data

Notes:

Flexible RG58 Coax Cable Single Shielded with Black PVC (NC) Jacket from Pasternack Enterprises has same day shipment for domestic and International orders. Our RF, microwave and millimeter wave products maintain a 99.4% availability and are part of the broadest selection in the industry.

Click the following link (or enter part number in "SEARCH" on website) to obtain additional part information including price, inventory and certifications: Flexible RG58 Coax Cable Single Shielded with Black PVC (NC) Jacket RG58C/U

URL: https://www.pasternack.com/flexible-0.195-rg58-50-ohm-coax-cable-pvc-jacket-rg58c-u-p.aspx

The information contained in this document is accurate to the best of our knowledge and representative of the part described herein. It may be necessary to make modifications to the part and/or the documentation of the part, in order to implement improvements. Pasternack reserves the right to make such changes as required. Unless otherwise stated, all specifications are nominal. Pasternack does not make any representation or warranty regarding the suitability of the part described herein for any particular purpose, and Pasternack does not assume any liability arising out of the use of any part or documentation.

Pasternack Enterprises, Inc. • P.O. Box 16759, Irvine, CA 92623
Phone: (866) 727-8376 or (949) 261-1920 • **Fax:** (949) 261-7451
Sales@Pasternack.com • Techsupport@Pasternack.com

© 2017 Pasternack Enterprises All Rights Reserved

RG58C/U CAD Drawing

Flexible RG58 Coax Cable Single Shielded with Black PVC (NC) Jacket

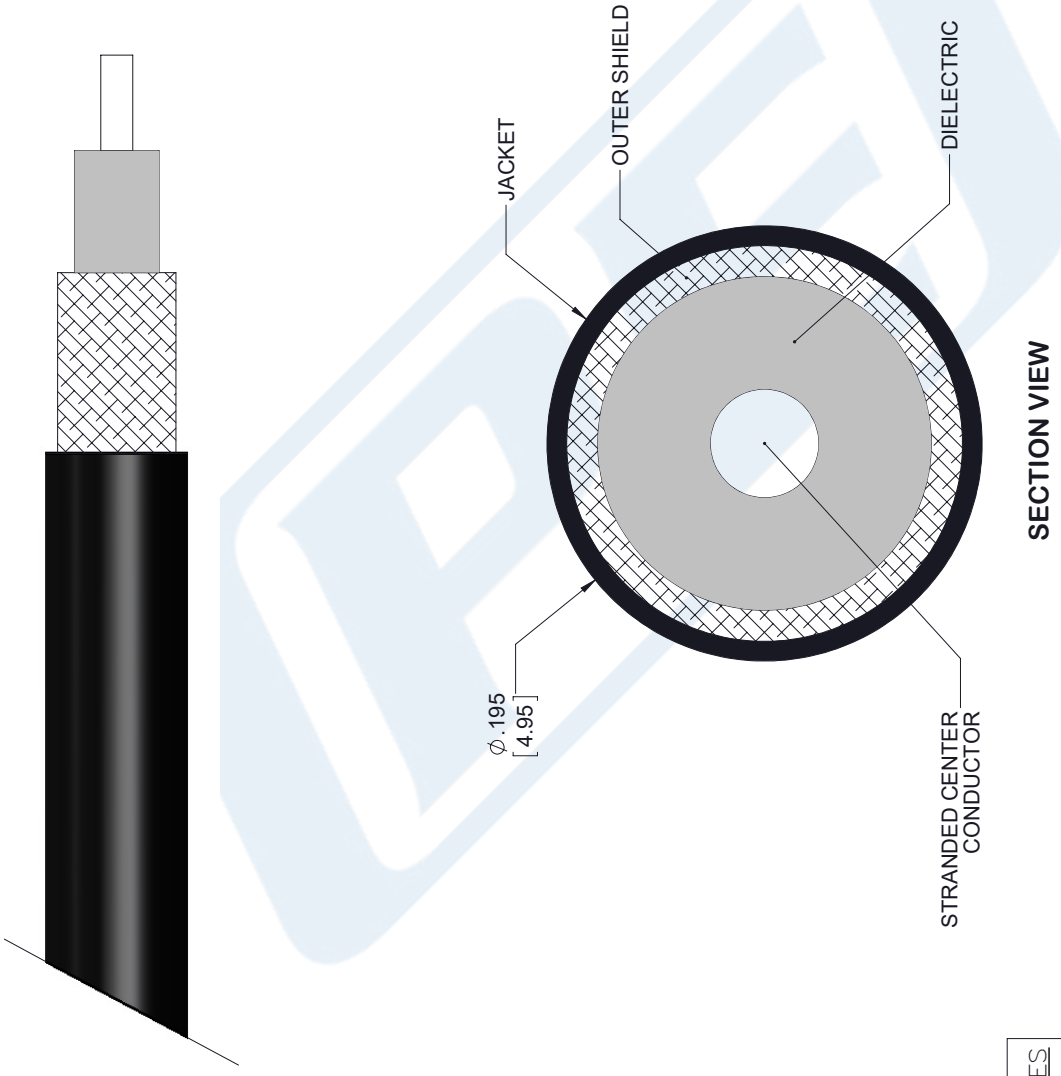

STANDARD TOLERANCES	
.X	±0.2
.XX	±0.01
.XXX	±0.005

*STANDARD TOLERANCES APPLY ONLY TO DIMENSIONS IN INCHES

NOTES:
1. UNLESS OTHERWISE SPECIFIED ALL DIMENSIONS ARE NOMINAL.
2. ALL SPECIFICATIONS ARE SUBJECT TO CHANGE WITHOUT NOTICE AT ANY TIME
3. DIMENSIONS ARE IN INCHES [mm].

DWG TITLE RG58C/U

CAD FILE 091817 | SCALE N/A | SIZE A | 7361

CAGE CODE 53919

PASTERNACK®
THE ENGINEER'S RF SOURCE
Pasternack Enterprises, Inc.
P.O. Box 16759 | Irvine | CA | 92623
Phone: (949) 261-1920 | **Fax:** (949) 261-7451
Website: www.pasternack.com | **E-Mail:** sales@pasternack.com

© 2017 Pasternack Enterprises All Rights Reserved