PASTERNACK®
www.pasternack.com

# 1.0/2.3 Jack Bulkhead Connector Crimp/Solder Attachment For RG174, RG316, RG188, .217 inch DD Hole

TECHNICAL DATA SHEET PE44254

**1.0/2.3 Jack Bulkhead Connector Crimp/Solder Attachment For RG174, RG316, RG188, .217 inch DD Hole**

## Configuration

| | |
|---|---|
| Connector | 1.0/2.3 Jack |
| Connector Interface Type | RG174,RG316,RG188 |
| Cable Attachment Method (Shield/Contact) | Crimp/Solder |
| Body Style | Straight |
| Mount Method | Bulkhead |

## Electrical Specifications

| | |
|---|---|
| Impedance, Ohms | 50 |

## Mechanical Specifications

**Size**

| | |
|---|---|
| Length, in [mm] | 0.955 [24.26] |
| Width/Dia., in [mm] | 0.275 [6.99] |
| Weight, lbs [g] | 0.006 [2.72] |

**Connector**

| | |
|---|---|
| Type | 1.0/2.3 Jack |
| Contact Material and Plating | Gold |
| Body Material and Plating | Brass, Gold |
| Dielectric Type | PTFE |

## Compliance Certifications (visit www.Pasternack.com for current document)

| | |
|---|---|
| RoHS Compliant | Yes |

## Plotted and Other Data

| | |
|---|---|
| Notes: | Values at 25 °C, sea level |

1.0/2.3 Jack Bulkhead Connector Crimp/Solder Attachment For RG174, RG316, RG188, .217 inch DD Hole from Pasternack Enterprises has same day shipment for domestic and International orders. Our RF, microwave and fiber optic products maintain a 99% availability and are part of the broadest selection in the industry.

Click the following link (or enter part number in “SEARCH” on website) to obtain additional part information including price, inventory and certifications: 1.0/2.3 Jack Bulkhead Connector Crimp/Solder Attachment For RG174, RG316, RG188, .217 inch DD Hole PE44254

URL: http://www.pasternack.com/1.0-2.3-jack-standard-rg174-rg316-rg188-connector-pe44254-p.aspx

The information contained in this document is accurate to the best of our knowledge and representative of the part described herein. It may be necessary to make modifications to the part and/or the documentation of the part, in order to implement improvements. Pasternack reserves the right to make such changes as required. Unless otherwise stated, all specifications are nominal.

Pasternack Enterprises, Inc. • P.O. Box 16759, Irvine, CA 92623
**Phone:** (866) 727-8376 or (949) 261-1920 • **Fax:** (949) 261-7451
Sales@Pasternack.com • Techsupport@Pasternack.com

© 2013 Pasternack Enterprises All Rights Reserved

# PE44254 CAD Drawing

1.0/2.3 Jack Bulkhead Connector Crimp/Solder Attachment
For RG174, RG316, RG188, .217 inch DD Hole

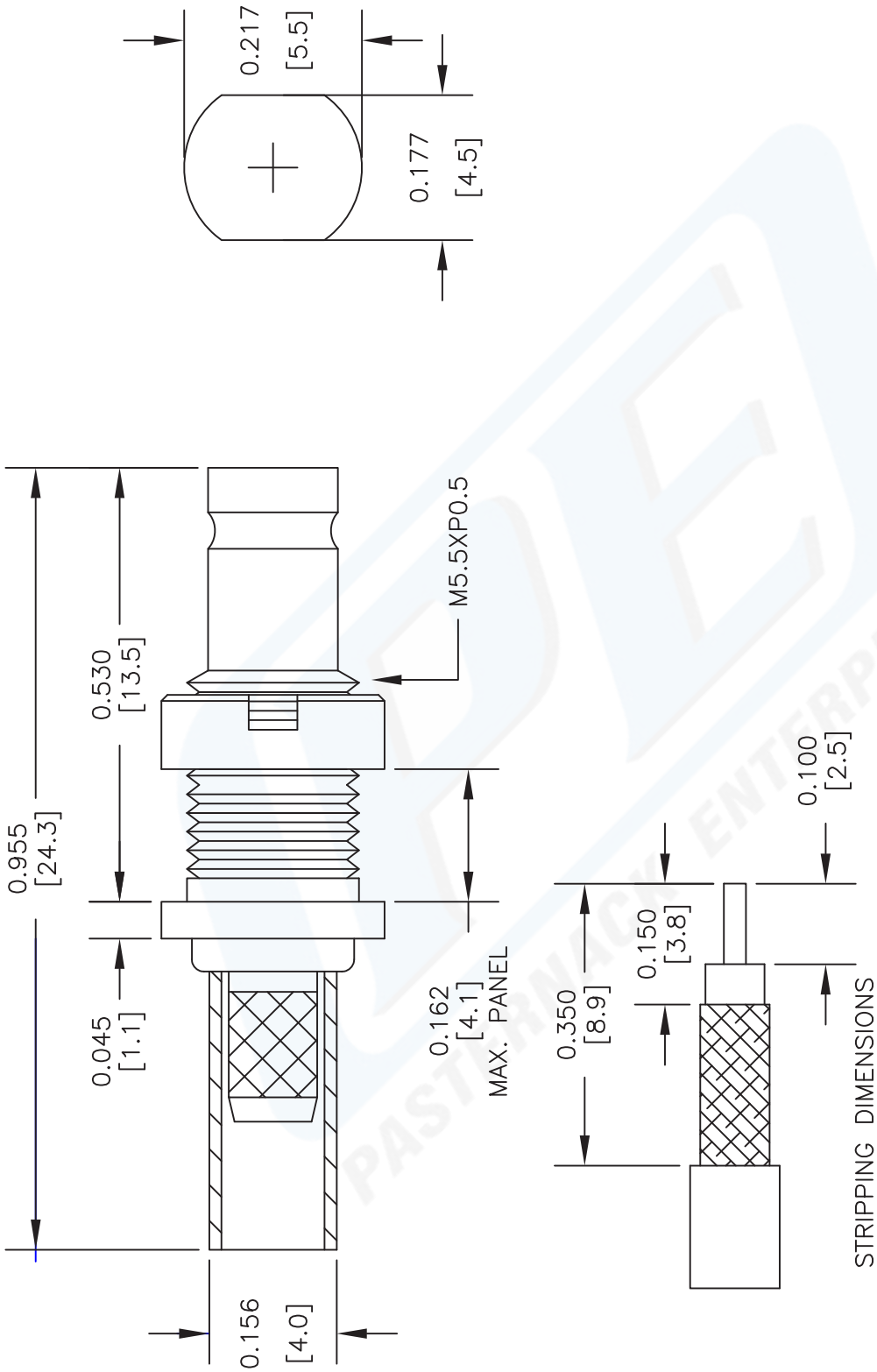


CRIMP SIZE REQUIRED

CONTACT: SOLDER
FERRULE: .128" HEX CRIMP TOOL

NOTES:
1. UNLESS OTHERWISE SPECIFIED ALL DIMENSIONS ARE NOMINAL.
2. ALL SPECIFICATIONS ARE SUBJECT TO CHANGE WITHOUT NOTICE AT ANY TIME.
3. DIMENSIONS ARE IN INCHES [mm].
4. FITS MIL-C-17 AND EQUIVALENT CABLES.

DWG TITLE **PE44254**

FSCM NO. 53919

CAD FILE 080102 | SCALE N/A | SIZE A | 2233

PASTERNACK®
Pasternack Enterprises, Inc.
P.O. Box 16759 | Irvine | CA | 92623
**Phone:** (949) 261-1920 | **Fax:** (949) 261-7451
**Website:** www.pasternack.com | **E-Mail:** sales@pasternack.com

© 2013 Pasternack Enterprises All Rights Reserved

PASTERNACK
an INFINITE brand

# FAKRA Plug Connector Crimp/Solder Attachment for RG174, RG316, RG188, .100 inch, PE-B100, PE-C100, LMR-100, Black Color

RF Connectors
Technical Data Sheet

PE45404A

## Configuration

- FAKRA Plug Connector
- 50 Ohms
- Straight Body Geometry
- RG174, RG316, RG188, .100 inch, PE-B100, PE-C100, LMR-100 Interface Type
- Crimp/Solder Attachment

## Features

- Max. Operating Frequency 4 GHz
- Good VSWR of 1.3:1
- Gold Plated Phosphor Bronze Contact

## Applications

- General Purpose Test
- Custom Cable Assemblies

### Description

Pasternack's PE45404A FAKRA plug connector with crimp/solder attachment for RG174, RG316, RG188, .100 inch, PE-B100, PE-C100 and LMR-100 is part of our full line of RF components available for same-day shipping. Our FAKRA plug connector operates up to a maximum frequency of 4 GHz and offers good VSWR of 1.3:1.

Our FAKRA plug connector PE45404A datasheet specifications and drawing with dimensions are shown below in this PDF. Pasternack's broad catalog of RF, microwave and millimeter wave connectors allows designers to configure and customize their signal connections however they like. Whether the need is to provide an I/O for a board design, or simply create a custom cable assembly configuration, Pasternack has the right connector for the job. Pasternack can also expertly build your custom cable assemblies for you and ship same-day.

### Electrical Specifications

| Description | Minimum | Typical | Maximum | Units |
|---|---|---|---|---|
| Frequency Range | DC | | 4 | GHz |
| VSWR | | | 1.3:1 | |
| Operating Voltage (AC) | | | 335 | Vrms |
| Dielectric Withstanding Voltage (AC) | | | 800 | Vrms |
| Inner Conductor DC Resistance | | | 6 | mOhms |
| Outer Conductor DC Resistance | | | 2.5 | mOhms |
| Insulation Resistance | 1,000 | | | MOhms |

### Mechanical Specifications

| | |
|---|---|
| **Size** | |
| Length | 0.89 in [22.61 mm] |
| Width/Dia. | 0.37 in [9.40 mm] |
| Height | 0.433 in [11 mm] |
| Weight | 0.005 lbs [2.27 g] |

Click the following link (or enter part number in "SEARCH" on website) to obtain additional part information including price, inventory and certifications: FAKRA Plug Connector Crimp/Solder Attachment for RG174, RG316, RG188, .100 inch, PE-B100, PE-C100, LMR-100, Black Color PE45404A

Pasternack Enterprises, Inc. • P.O. Box 16759, Irvine, CA 92623
**Phone:** (866) 727-8376 or (949) 261-1920 • **Fax:** (949) 261-7451
Sales@Pasternack.com • Techsupport@Pasternack.com

© 2019 Pasternack Enterprises All Rights Reserved

# FAKRA Plug Connector Crimp/Solder Attachment for RG174, RG316, RG188, .100 inch, PE-B100, PE-C100, LMR-100, Black Color



**Material Specifications**

| Description | Material | Plating |
|---|---|---|
| Contact | Phosphor Bronze | Gold |
| Insulation | PTFE | |
| Outer Conductor | Brass | Nickel |
| Body | Plastic | |

## Environmental Specifications

**Temperature**

Operating Range -40 to +85 deg C

## Compliance Certifications (see product page for current document)

## Plotted and Other Data

Notes:

Click the following link (or enter part number in “SEARCH” on website) to obtain additional part information including price, inventory and certifications: FAKRA Plug Connector Crimp/Solder Attachment for RG174, RG316, RG188, .100 inch, PE-B100, PE-C100, LMR-100, Black Color PE45404A

Pasternack Enterprises, Inc. • P.O. Box 16759, Irvine, CA 92623
**Phone:** (866) 727-8376 or (949) 261-1920 • **Fax:** (949) 261-7451
Sales@Pasternack.com • Techsupport@Pasternack.com

© 2019 Pasternack Enterprises All Rights Reserved

# FAKRA Plug Connector Crimp/Solder Attachment for RG174, RG316, RG188, .100 inch, PE-B100, PE-C100, LMR-100, Black Color



**Assembly Instruction**

*

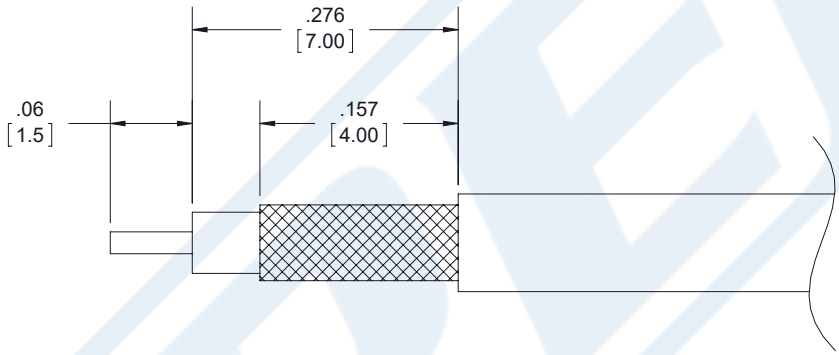


## ASSEMBLY PROCEDURES

1. STRIP CABLE TO THE DIMENSIONS SHOWN, DO NOT NICK CENTER CONDUCTOR OR BRAID.
2. PUSH CENTER CONDUCTOR FULLY INTO CONTACT AND SOLDER, REMOVE ANY EXCESS SOLDER.
3. FLARE BRAID AND INSERT CONTACT INTO THE BODY UNTIL IT SEATS.
4. SLIDE FERRULE OVER BRAID AND CRIMP WITH CRIMP TOOL.

## CRIMP SIZE REQUIRED

- CONTACT: SOLDER.
- FERRULE: .128 HEX CRIMP TOOL.

Click the following link (or enter part number in “SEARCH” on website) to obtain additional part information including price, inventory and certifications: FAKRA Plug Connector Crimp/Solder Attachment for RG174, RG316, RG188, .100 inch, PE-B100, PE-C100, LMR-100, Black Color PE45404A

Pasternack Enterprises, Inc. • P.O. Box 16759, Irvine, CA 92623
**Phone:** (866) 727-8376 or (949) 261-1920 • **Fax:** (949) 261-7451
Sales@Pasternack.com • Techsupport@Pasternack.com

© 2019 Pasternack Enterprises All Rights Reserved

# FAKRA Plug Connector Crimp/Solder Attachment for RG174, RG316, RG188, .100 inch, PE-B100, PE-C100, LMR-100, Black Color

## RF Connectors
## Technical Data Sheet

PE45404A

FAKRA Plug Connector Crimp/Solder Attachment for RG174, RG316, RG188, .100 inch, PE-B100, PE-C100, LMR-100, Black Color from Pasternack Enterprises has same day shipment for domestic and International orders. Our RF, microwave and millimeter wave products maintain a 99.4% availability and are part of the broadest selection in the industry.

Click the following link (or enter part number in “SEARCH” on website) to obtain additional part information including price, inventory and certifications: FAKRA Plug Connector Crimp/Solder Attachment for RG174, RG316, RG188, .100 inch, PE-B100, PE-C100, LMR-100, Black Color PE45404A

URL: https://www.pasternack.com/fakra-plug-rg174-rg316-.100-pe-b100-pe-c100-connector-pe45404a-p.aspx

The information contained in this document is accurate to the best of our knowledge and representative of the part described herein. It may be necessary to make modifications to the part and/or the documentation of the part, in order to implement improvements. Pasternack reserves the right to make such changes as required. Unless otherwise stated, all specifications are nominal. Pasternack does not make any representation or warranty regarding the suitability of the part described herein for any particular purpose, and Pasternack does not assume any liability arising out of the use of any part or documentation.

Pasternack Enterprises, Inc. • P.O. Box 16759, Irvine, CA 92623
**Phone:** (866) 727-8376 or (949) 261-1920 • **Fax:** (949) 261-7451
Sales@Pasternack.com • Techsupport@Pasternack.com

© 2019 Pasternack Enterprises All Rights Reserved

# PE45404A CAD Drawing

FAKRA Plug Connector Crimp/Solder Attachment for RG174, RG316, RG188, .100 inch, PE-B100, PE-C100, LMR-100, Black Color

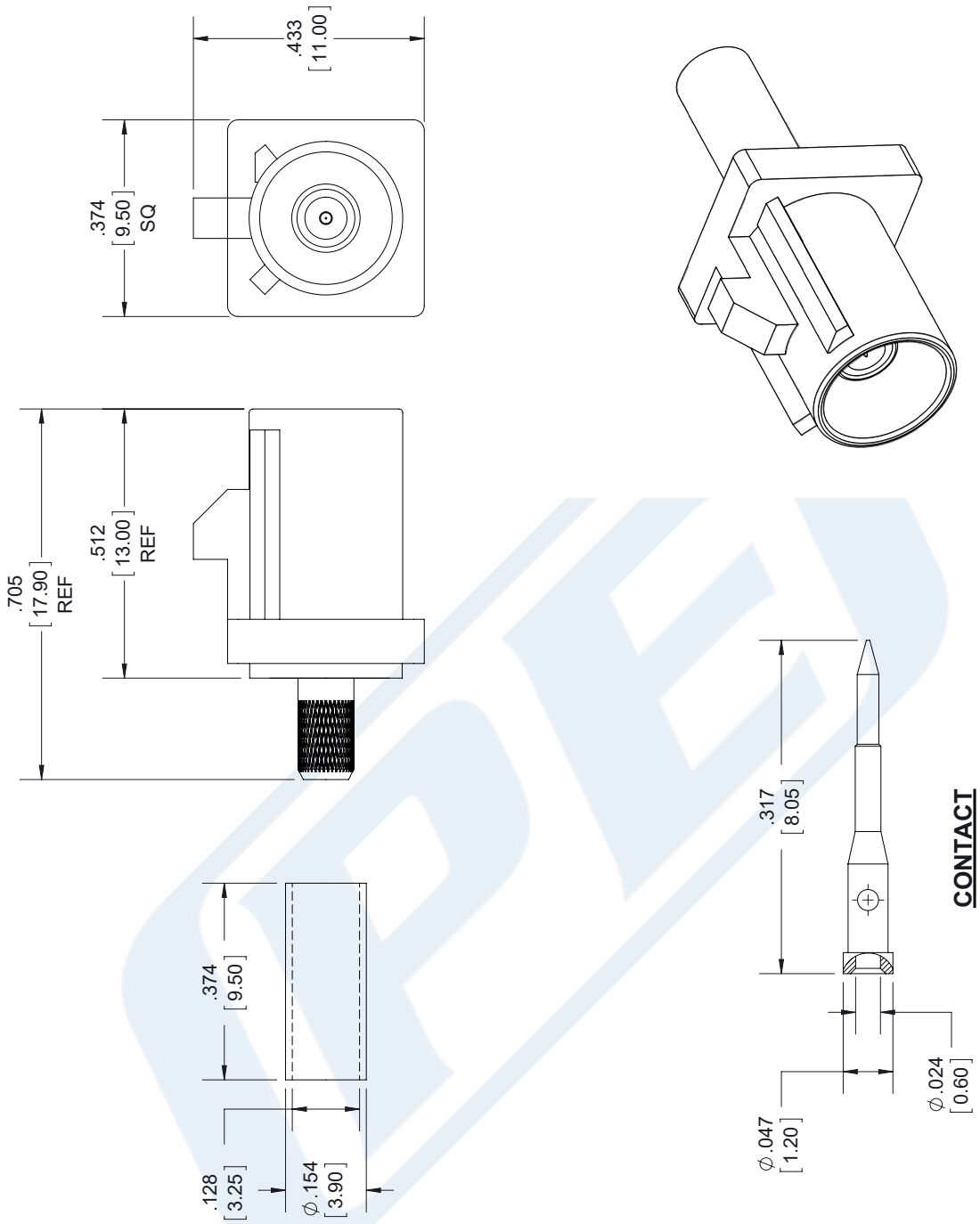


**FAKRA CONFIGURATION**

| CODING | JACK | COLOR | APPLICATION |
|---|---|---|---|
| A | | BLACK | RADIO WITH PHANTOM SUPPLY |
| B | | WHITE | RADIO WITHOUT PHANTOM SUPPLY |
| C | | BLUE | GPS: TELEMATICS OR NAVIGATION |
| D | | BORDEAUX | GSM: CELLULAR PHONE |
| H | | VIOLET | GPS: TELEMATICS AND NAVIGATION |
| I | | BEIGE | BLUETOOTH |
| K | | CURRY | RADIO WITH IF OUTPUT (ANTENNA DIVERSITY) |
| Z | | WATER BLUE | NEUTRAL CODING |

STANDARD TOLERANCES
.X ±0.2
.XX ±0.01
.XXX ±0.005

*STANDARD TOLERANCES APPLY ONLY TO DIMENSIONS IN INCHES

NOTES:
1. UNLESS OTHERWISE SPECIFIED ALL DIMENSIONS ARE NOMINAL.
2. ALL SPECIFICATIONS ARE SUBJECT TO CHANGE WITHOUT NOTICE AT ANY TIME
3. DIMENSIONS ARE IN INCHES [mm].

DWG TITLE PE45404A

CAD FILE 082917 | SCALE N/A | SIZE A | 9999

CAGE CODE 53919

PASTERNACK® THE ENGINEER'S RF SOURCE
Pasternack Enterprises, Inc.
P.O. Box 16759 | Irvine | CA | 92623
**Phone:** (949) 261-1920 | **Fax:** (949) 261-7451
**Website:** www.pasternack.com | **E-Mail:** sales@pasternack.com

© 2019 Pasternack Enterprises All Rights Reserved

# Flexible RG316 Coax Cable Single Shielded with Tan FEP Jacket

RF Cables
Technical Data Sheet

RG316/U

## Configuration

- Flexible Cable
- 1 Shield(s)

## Features

- High Flexibility
- FEP Jacket
- Velocity of Propagation 69%

## Applications

- General Purpose
- Antenna Feeds
- Communication Systems
- Wireless Systems
- Indoor / Outdoor Uses
- High Temperature Applications
- High Flexibility Applications
- Jumper Cable Assemblies

### Description

Flexible coaxial cable are ideal for applications where tight bends and continual flexure are required. Pasternack's RG316/U is a single shielded flexible coax cable with FEP jacket and compatible with a wide selection of connector types. This RG316/U coaxial cable has a stranded inner conductor for better flexibility and operates up to 3 GHz. The FEP jacket of this RG316/U coax cable makes it suitable for indoor/outdoor uses and high temperature applications. RG316/U datasheet specifications and outline drawing for this flexible cable are shown in the PDF below.

Pasternack carries a wide range of cables ready to ship same day to fit your needs. They are available in corrugated, flexible, formable or semi-rigid versions with different constructions of conductor materials, dielectric materials, shielding configurations and jacket materials. Our cables are designed to fit a wide range of performance criteria including attenuation, operating temperature, environmental factor, and power capability.

### Electrical Specifications

| Description | Minimum | Typical | Maximum | Units |
|---|---|---|---|---|
| Frequency Range | DC | | 3 | GHz |
| Impedance | | 50 | | Ohms |
| Velocity of Propagation | | 69 | | % |
| Operating Voltage (AC) | | | 900 | Vrms |
| Dielectric Withstanding Voltage (AC) | | | 2,000 | Vrms |
| Jacket Spark | | | 2,000 | Vrms |
| Nominal Capacitance | | | 32 [104.99] | [pF/m] |

Click the following link (or enter part number in "SEARCH" on website) to obtain additional part information including price, inventory and certifications: Flexible RG316 Coax Cable Single Shielded with Tan FEP Jacket RG316/U

Pasternack Enterprises, Inc. • P.O. Box 16759, Irvine, CA 92623
**Phone:** (866) 727-8376 or (949) 261-1920 • **Fax:** (949) 261-7451
Sales@Pasternack.com • Techsupport@Pasternack.com

© 2019 Pasternack Enterprises All Rights Reserved

# Flexible RG316 Coax Cable Single Shielded with Tan FEP Jacket



### Performance by Frequency Band

| Description | F1 | F2 | F3 | F4 | F5 | Units |
|---|---|---|---|---|---|---|
| Frequency | 0.05 | 0.1 | 0.4 | 1 | 3 | GHz |
| Attenuation, Typ | 7.5 | 11 | 21 | 38 | 58 | dB/100ft |
| | 24.61 | 36.09 | 68.9 | 124.67 | 190.29 | dB/100m |

## Mechanical Specifications

| | |
|---|---|
| Diameter | 0.102 in [2.59 mm] |
| Weight | 0.01 lbs/ft [0.01 Kg/m] |

### Construction Specifications

| Description | Material and Plating | Diameter |
|---|---|---|
| Inner Conductor | Copper Clad Steel, Silver7 | 0.02 in 0.51 mm |
| Conductor Type | Stranded | |
| Dielectric | PTFE | 0.06 in 1.52 mm |
| First Shield | Silver Plated Copper Braid<br>95% coverage | 0.081 in 2.06 mm |
| Jacket | FEP, Tan | 0.102 in [2.59 mm] |

## Environmental Specifications

**Temperature**

| | |
|---|---|
| Operating Range | -55 to +200 deg C |

Click the following link (or enter part number in “SEARCH” on website) to obtain additional part information including price, inventory and certifications: Flexible RG316 Coax Cable Single Shielded with Tan FEP Jacket RG316/U

Pasternack Enterprises, Inc. • P.O. Box 16759, Irvine, CA 92623
**Phone:** (866) 727-8376 or (949) 261-1920 • **Fax:** (949) 261-7451
Sales@Pasternack.com • Techsupport@Pasternack.com

© 2019 Pasternack Enterprises All Rights Reserved

# Flexible RG316 Coax Cable Single Shielded with Tan FEP Jacket



**Compliance Certifications** (see product page for current document)

**Plotted and Other Data**

Notes:

Flexible RG316 Coax Cable Single Shielded with Tan FEP Jacket from Pasternack Enterprises has same day shipment for domestic and International orders. Our RF, microwave and millimeter wave products maintain a 99.4% availability and are part of the broadest selection in the industry.

Click the following link (or enter part number in “SEARCH” on website) to obtain additional part information including price, inventory and certifications: Flexible RG316 Coax Cable Single Shielded with Tan FEP Jacket RG316/U

URL: https://www.pasternack.com/flexible-rg316u-fep-jacket-silver-plated-copper-braid-outer-conductor-single-shielded-rg316-u-p.aspx

The information contained in this document is accurate to the best of our knowledge and representative of the part described herein. It may be necessary to make modifications to the part and/or the documentation of the part, in order to implement improvements. Pasternack reserves the right to make such changes as required. Unless otherwise stated, all specifications are nominal. Pasternack does not make any representation or warranty regarding the suitability of the part described herein for any particular purpose, and Pasternack does not assume any liability arising out of the use of any part or documentation.

Pasternack Enterprises, Inc. • P.O. Box 16759, Irvine, CA 92623
**Phone:** (866) 727-8376 or (949) 261-1920 • **Fax:** (949) 261-7451
Sales@Pasternack.com • Techsupport@Pasternack.com

© 2019 Pasternack Enterprises All Rights Reserved

# RG316/U CAD Drawing

Flexible RG316 Coax Cable Single Shielded with Tan FEP Jacket

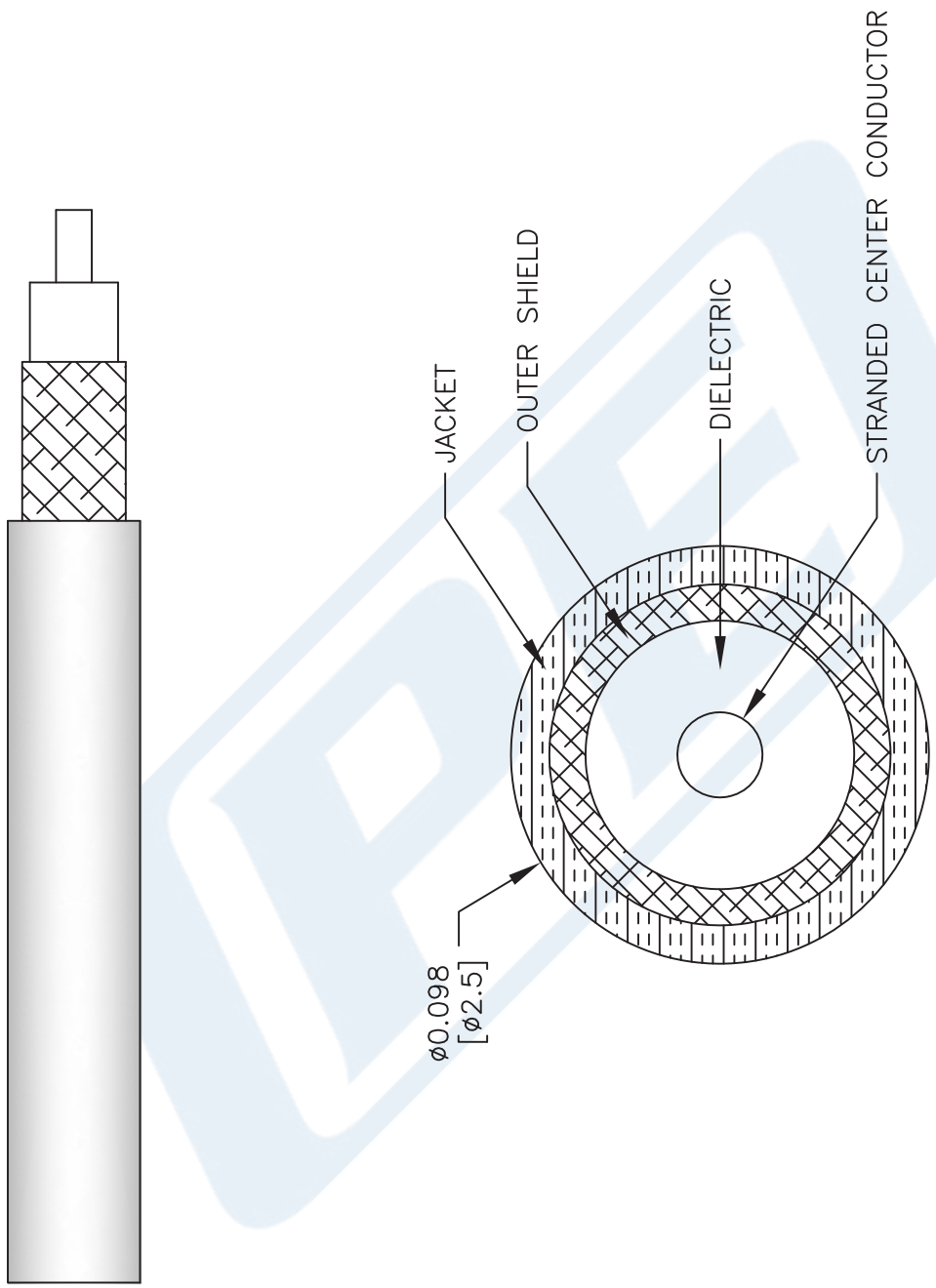


NOTES:
1. UNLESS OTHERWISE SPECIFIED ALL DIMENSIONS ARE NOMINAL.
2. ALL SPECIFICATIONS ARE SUBJECT TO CHANGE WITHOUT NOTICE AT ANY TIME.
3. DIMENSIONS ARE IN INCHES [mm].

DWG TITLE
RG316/U

FSCM NO. 53919

CAD FILE 111716 | SCALE N/A | SIZE A | 41742

PASTERNACK®
THE ENGINEER'S RF SOURCE
Pasternack Enterprises, Inc.
P.O. Box 16759 | Irvine | CA | 92623
**Phone:** (949) 261-1920 | **Fax:** (949) 261-7451
**Website:** www.pasternack.com | **E-Mail:** sales@pasternack.com

© 2019 Pasternack Enterprises All Rights Reserved